User's Manual

GC8000
GC1000 MarkII

ASIU
Analyzer Server Interface Unit Software

IM 11B06F01-01E

vigilantplant®

YOKOGAWA
Yokogawa Electric Corporation

IM 11B06F01-01E
4th Edition

Introduction

Thank you for purchasing the ASIU Analyzer Server Interface Unit Software.

ASIU Analyzer Server Interface Unit is the software to communicate with DCS and to make the data storage and the maintenance of the field analyzer/sensor on a PC by inputting their information (Analog and Digital) except GC into the I/O unit (FCN) Connected by the ANABUS network.

This manual describes the basic method of operating the ASIU.

For how to operate GC8000 or GC1000 MarkII, refer to their corresponding user's manuals.

Applicatable Readers

The description of the installation method assumes that the reader has a basic knowledge of hardware and software that is necessary for installing the ASIU, and Windows as well.

For further details of Windows, refer to the respective manuals.

Contents of the Package

The contents of the package are as follows. Check the contents of your package.

- ASIU installation disc
- ASIU User's Manual (this manual)

Safety Precautions

- In order to protect the system controlled by the product and the product itself and ensure safe operation, observe the safety precautions described in this user's manual. We assume no liability for safety if users fail to observe these instructions when operating the product.
- Modification of the product is strictly prohibited.

Notes on Handling User's Manuals

- Please hand over the user's manuals to your end users so that they can keep the user's manuals on hand for convenient reference.
- Please read the information thoroughly before using the product.
- The purpose of these user's manuals is not to warrant that the product is well suited to any particular purpose but rather to describe the functional details of the product.
- No part of the user's manuals may be transferred or reproduced without prior written consent from YOKOGAWA.
- YOKOGAWA reserves the right to make improvements in the user's manuals and product at any time, without notice or obligation.
- If you have any questions, or you find mistakes or omissions in the user's manuals, please contact our sales representative or your local distributor.

Warning and Disclaimer

The product is provided on an "as is" basis. YOKOGAWA shall have neither liability nor responsibility to any person or entity with respect to any direct or indirect loss or damage arising from using the product or any defect of the product that YOKOGAWA can not predict in advance.

Notes on Software

- YOKOGAWA makes no warranties, either expressed or implied, with respect to the software's merchantability or suitability for any particular purpose, except as specified in the terms of warranty.
- This product may be used on a machine only. If you need to use the product on another machine, you must purchase another product.
- It is strictly prohibited to reproduce the product except for the purpose of backup.
- Store the CD-ROM (the original medium) in a safe place.
- It is strictly prohibited to perform any reverse-engineering operation, such as reverse compilation or reverse assembling on the product.
- No part of the product may be transferred, converted or sublet for use by any third party, without prior written consent from YOKOGAWA.

Documentation Conventions

Symbol Marks

Throughout this user's manual, you will find several different types of symbols are used to identify different sections of text. This section describes these icons.

NOTE
Identifies important information required to understand operations or functions.

TIP
Identifies additional information.

SEE ALSO
Identifies a source to be referred to.

HELP !

Indicates text describing the action to be taken when a message or indication is displayed during an operation.

Keyboard Inscriptions

Keyboard operations are indicated in this manual as shown in the following example.

(Inscription example)

[Shift] + [F1]

(Meaning)

Indicates that the operator must press the [F1] key while pressing the [Shift] key.

Menu Inscriptions

Menu operations are indicated in this manual as shown in the following example.

(Inscription example)

Click on [Connect] in the [System] menu.

(Meaning)

Click on the [System] menu, then click on the [Connect] command.

Drawing Conventions

Some drawings may be partially emphasized, simplified, or omitted, for the convenience of description.

Some screen images depicted in the user's manual may have different display positions or character types (e.g., the upper / lower case). Also note that some of the images contained in this user's manual are display examples.

Copyright and Trademark Notices

All Rights Reserved

Trademark Acknowledgments

- Microsoft, Windows and Windows NT are either registered trademarks or trademarks of Microsoft Corporation in the United States and/or other countries.
- Ethernet is a registered trademark of XEROX Corporation.
- Modbus is a registered trademark of Schneider Electric SA.
- All other company and product names mentioned in this user's manual are trademarks or registered trademarks of their respective companies.
- We do not use TM or ® mark to indicate those trademarks or registered trademarks in this user's manual.

ASIU
Analyzer Server Interface Unit
Software

IM 11B06F01-01E 4th Edition

CONTENTS

1. Outline

ASIU is a component designed for Ethernet analyzer bus system. It is realized with the I/O unit software on FCN hardware.

ASIU is equipped max. 3 sets of I/O card and transfer I/O information to outside by two type interfaces: Modbus TCP Ethernet one port and Modbus RTU serial.

Modbus mapping is realized with address table and programming is not necessary.

FCN is described as ASIU is in this document.

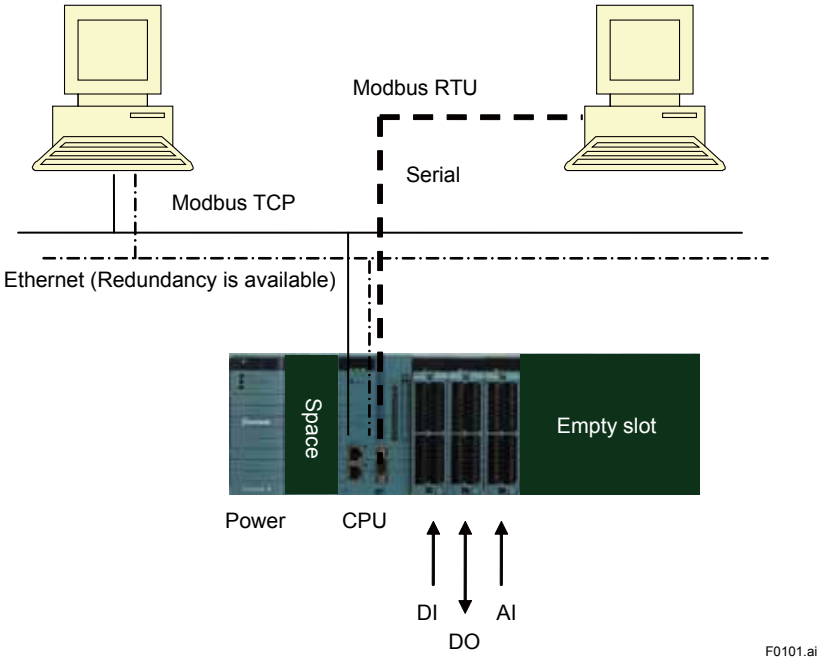

Figure 1.1 System Configuration

Network :	Ethernet (Redundancy is available. Port-1 is used on the single communication), Serial (RS-232C)
Power card:	Single
CPU card :	Single
DI card :	1 pc (Read up to 16 points)
DO card :	1 pc (Read and write up to 16 points)
AI card :	1 pc (Read and write up to 16 points)

2. Configuration

This chapter explains the configuration of the hardware and software of STARDOM FCN required for ASIU.

Refer to the General Specifications of STARDOM for details of each item.

2.1 Hardware configuration

The following type FCN is required for the ASIU.

Specification Code

Specify these codes when ordering.

Model Name	Item	Remarks
NFBU200-S□□	Base module	
NFCP100-S0□	CPU module	
NFPW441-1□	Power module	100 to 120 V AC
NFPW442-1□	Power module	220 to 240 V AC
NFPW444-1□	Power module	24 V DC
NFDV151	Digital input module	32 points, 24 V DC
NFDV551	Digital output module	32 points, 24 V DC
NFDR541	Relay output module	16 points, 24 to 110 V DC /100 to 240 V AC
NFAI135	Analog input module	4 to 20 mA, 8 points, channel isolation
NFAI143	Analog input module	4 to 20 mA, 16 points, system isolation
NFDCV01	Dummy cover	Cover for empty I/O module
NFDCV02	Dummy cover	Cover for empty power module

2.2 Software configuration

ASIU

Model	Suffix Code	Option Code	Description
ASIU	.....	.....	Software Package
Function	**-A01**	.....	Standard
Language	**E** **J**	....	English Japanese
——	**-N**	.....	Always "-N"
——	**N**	.....	Always "N"

ASIU requires the license and software shown below.

License Code	Item	Remarks
NT711AJ-LS05A	FCN/FCJ basic software license for single CPU without Java	It is supplied by a system card.
NT8035J-LW11A	Modbus communication portfolio license	The license number is indicated on the order ID sheet.

The following software is required as an engineering tool.

CD-ROM Code	Item	Remarks
NT203AJ-PC11E	Resource configurator	It is supplied by CD ROM. Loading a license for installation Modification of IP address

3. Functions

ASIU has the following functions.

1. **Access the I/O cards (DI read, DO write and read back, AI read)**
2. **Creating the alarm information**
3. **Interface to DCS through Modbus RTU Slave or Modbus TCP Server**

3.1 I/O card

ASIU accesses the I/O card such as DI, DO and AI attached on the FCN to read and write the data periodically.

Scan interval: 100 msec.

The slots which is not assign the I/O on the resource configurator are not made a read and write, even IOP check.

DI card

Max. 16 points of the digital inputs are read periodically.

DO card

Max. 16 points of the digital output are written and read back the output status periodically.

AI card

Max. 16 points of the analog data is read periodically.

Data type: Real number

Range: 0.0 to 1.0

Accuracy: It follows the specification of each module used. Refer to the GS of the relevant analog card.

Input signal	AI	IOP
106.3 % or more	1.0	1
100 to 106.3 %	1.0	0
0 to 100 %	0.0 to 1.0	0
-6.3 to 0 %	0.0	0
-6.3 % or less	0.0	1

The value of the analog data which is not assigned on the resource configurator is always 0, and the IOP is also 0.

3.2 Alarm information

ASIU checks the status of I/O and power card, and the following alarm information is provided on Modbus interface as Boolean data.

Main power failure, 24 V DC power failure, I/O module failure

3.3 Modbus interface table

ASIU has the function of Modbus TCP Server and Modbus RTU slave at the same time, and indicate DI, DO, AI and the alarm information on the specific address by mapping. The writing command to DO is also set on the specific address by Modbus interface.

Modbus interface table

Function	Function Code	BIT/WORD	Maximum data by access in one communication packet.
Read coil status	1 (0x01)	BIT	2000 bits
Read input relay status	2 (0x02)	BIT	2000 bits
Read holding registers	3 (0x03)	WORD	125 words
Read input registers	4 (0x04)	WORD	125 words
Write coil	5 (0x05)	BIT	1 bit
Write single register	6 (0x06)	WORD	1 word
Loopback test	8 (0x08)	WORD	1 word
Write multiple coils	15 (0x0F)	BIT	800 bits
Write multiple registers	16 (0x10)	WORD	100 words
Read device ID *	43 (0x2B)	ASCII string	

*: Device ID consists of vendor, product code and revision number.
Vendor : "YOKOGAWA"
Product: "ASIU"
REVISION: "1.01.01" (example)

Max number of Client

When Modbus TCP Server is used, up to 4 clients (DCS) can be connected at the same time. When the multiple clients request the same command, the last requested command in the action internval of ASIU is accepted.

Update Interval

The Modbus data is updated every 100 msec for DI, DO, AI and all alarm information.

Serial Port

RS-232C COM port on CPU card is used for Modbus RTU.

Monitoring Time

When there is no command from a client as a Modbus TCP server within 30 sec, the communication is cut off.

Coil (00001 to 09999)

Data	Address	Description
DO ON command	00101 to 00116	A 1 is set when DO001 to DO016 is ON. The coil is back to 0 automatically after setting a 1.
DO OFF command	00201 to 00216	A 1 is set when DO001 to DO016 is OFF. The coil is back to 0 automatically after setting a 1.

Input relay (10001 to 19999)

Data	Address	Description
ASIU normal	10001	Neither Power Failure, I/O module error nor IOP status happens. All of the address from 12001 to 12199 has 0 values.
ASIU error	10002	Either Power Failure, I/O module error or IOP status happens. One of the addresses from 12001 to 12199 has 1 value.
DI (Digital Input) read	10301 to 10316	DI01 to DI16
DO (Digital Output) read	10401 to 10416	DO16 to DO16
Power Failure	12001 12002	A 1 is displayed when Main Power is failed. A 1 is displayed when 24 V DC Power is failed.
I/O module error	12011 to 12014	A 1 is displayed when the module is failed. The address is followed the location of the I/O module. From left to right, 11, 12, 13 and 14 is applied.
AI IOP status	12101 to 12116	It corresponds to AI01 to AI16. A 1 is displayed when it is IOP status.

Input register (30001 to 39999)

Data	Address	Description
AI read (Real data)	30401 to 30432	The average value during 1 second with 10 scans times. However when it is IOP status, IOP value, which is 0 or 1, is displayed. When real number format is selected, the data is displayed with 2 words address. The data range is 0.0 to 1.0
AI read (9999)	30501 to 30516	The average value during 1 second with 10 scans times. However when it is IOP status, IOP value, which is 0 or 9999, is displayed. It means data normalized by 9999 (Scaling Coefficient). The data range is 0 to 9999
AI read (65535)	30601 to 30616	The average value during 1 second with 10 scans times. However when it is IOP status, IOP value, which is 0 or 65535, is displayed. It means data normalized by 65535 (Scaling Coefficient). The data range is 0 to 65535

Holding register (40001 to 49999)

Data	Address	Description
Not used		

Access to the address not listed or mapped

Access to the address that is not shown on the table or not mapped does not generate an error.

However, the value of data is uncertain.

DCS can write on coil or holding register of ASGW that is not defined, however ASGW does not write it on analyzers and the written data is kept on ASIU until turning off.

4. Engineering

ASIU requires the engineering at installation, and modification.

The install procedure of FCN is referred to “STARDOM FCN/FCJ Software Installation” (IM 34P02Q91-01E), and “STARDOM FCN/FCJ Guide” (IM 34P02Q01-01E).

4.1 Installation

This section explains the setup of FCN, license registration, loading of the application software, initializing of IP address and assignment of I/O cards.

4.1.1 Preparation

- **Installation of the engineering tool**

  Install the resource configurator software from CD-ROM (NT203AJ-PC11E) to PC.

  Resource configurator software is an engineering tool for STARDOM FCN/FCJ.

- **Installation of the ASIU software**

  Set the ASIU application software CD on PC.

  Uncompress the following compressed file on PC.

  (CD Drive)/ASIU/INSTALL_ASIU.ZIP

  Confirm the following folder is created.

  [Uncompressed folder]/INSTALL_ASIU

4.1.2 Initial setting

- **Loading the license file**

  Download the FCN license file from the STARDOM license publishing web site.

  Refer to D1. License in “STARDOM FCN/FCJ Guide (IM 34P02Q01-01E) about the license.

Setting the system card

Set the system compact flash card for FCN to PC by USB adaptor.

Run the following batch file.

[Uncompressed folder]/INSTALL_ASIU/install_ASIU.bat

This batch file sets the ASIU application and system setting file on the system card.

System setting file includes initial IP address setting.

The initial IP address can be changed later.

After writing, the system card set on the CPU card of FCN, and turn on the FCN.

Initial IP address = 192.168.1.101

NOTE

Do not format the system compact flash card. The card becomes invalid and new one is required.

Initializing with resource configurator

The method of initial setting operation with resource configurator is described on the instruction manual of FCN.

The work flow is described in this chapter. However, refer to the instruction manual for details of each operation.

(1) Setting the IP address

Refer to 4.3.1 Modification of IP address.

(2) Downloading the license file

Download the license file that is loaded from the STARDOM web site to ASIU with the resource configurator.

Refer to on-line help of resource configurator.

(3) Setting the network

Specify the Ethernet connection for ASIU if it is single or duplex.

Ethernet of ASIU has dual or single type and dual type has duplex and separated mode.

After completing the above 3 items, download the information by [File] - [Download].

Reboot the ASIU by pressing Reset button or Web browser. After starting ASIU confirm that the IP address is correct by ping command of PC.

(4) Assignment of I/O terminal and application

ASIU application reads the data to access Device Label, which is DI variable, DO variable and AI variable. It is accessible by assignment of Device Label into I/O terminal. The Device Label has no relation with I/O terminal at the initial installation. Refer to 4.2.1 Assignment of I/O terminal.

(5) Setting the serial port

In the case of Modbus RTU, the communication parameters should be adjusted to a connected device.

Refer to 4.3.2 Modification of serial port setting.

4.2 Modification work

There are 2 modification works at site. One is to change of IP address and the other is to change an assignment of I/O terminal. Here explains how to change the assignment of I/O terminal. This work requires the resource configurator.

Assignment of I/O terminal

ASIU application accesses Device Label, which is DI variable, DO variable and AI variable. It is accessible by assignment of Device Label into I/O terminal. This assignment work is executed after the following works are completed. Loading of ASIU application and the license, and setting of IP address.

The following Device Label in the table is defined in an ASIU. Assign these Device Label into I/O module terminal by resource configurator.

Signal	Device label	Data Range	Description
Analog input	ASIU_AI_01 ASIU_AI_02 : ASIU_AI_16	0.0 - 1.0 0.0 - 1.0 : 0.0 - 1.0	Correspond to AI01 in Modbus table Correspond to AI02 in Modbus table : Correspond to AI16 in Modbus table
Degital input	ASIU_DI_01 ASIU_DI_02 : ASIU_DI_16	_____	Correspond to DI01 in Modbus table Correspond to DI02 in Modbus table : Correspond to DI16 in Modbus table
Degital output	ASIU_DO_01 ASIU_DO_02 : ASIU_DO_16	_____	Correspond to DO01 in Modbus table Correspond to DO02 in Modbus table : Correspond to DO16 in Modbus table

(1) Start Resource Configurator

Connect ASIU to a PC for operation by Ethernet. Turn on ASIU and start Resource Configurator on the PC.

(2) Connect to ASIU

Press Connect at Menu bar, and then input IP address of ASIU. The information inside ASIU is uploaded from ASIU and displayed.

(3) Verify the project

Display the project information in the uploaded one from ASIU, and then confirm that the project name is "ASIU". When the project name is different, re-execute the setting of system card at Initial Setting of ASIU.

4.3 Supplement

This chapter explains how to change the IP address of ASIU.

The tool software that is shown below needs to be installed on PC.

CD-ROM Code	Item
NT203AJ-PC11E	Resource configurator

4.3.1 Modification of IP addressing setting

■ Preparation of PC

Connect the PC on which resource configurator software is installed to FCN with Ethernet

■ Starting the ASIU on the IP address setting mode

There are two methods of starting the FCN on the IP address setting mode.

One is use of web browser on PC, the other is use of switches on CPU module.

Select one depending on the location of FCN.

During the IP address setting mode, LEDs on CPU module of FCN are indicated as follows.

HRDY: Flashing quickly

RDY: Flashing slowly

CTRL: Not lit

To release this mode, press the RESET button or turn off the power.

● Method of use the switch on CPU module of FCN

(1) Turn on FCN, or press “RESET” button.

(2) FCN starts and during the “HRDY” and “RDY” LED are flashing rapidly (about for two seconds), press “SHUTDOWN” button once.

(3) FCN starts on IP address setting mode.

● Method of use web browser on PC.

(1) Access to the URL

URL = http://FCJ’s IP address/MNT

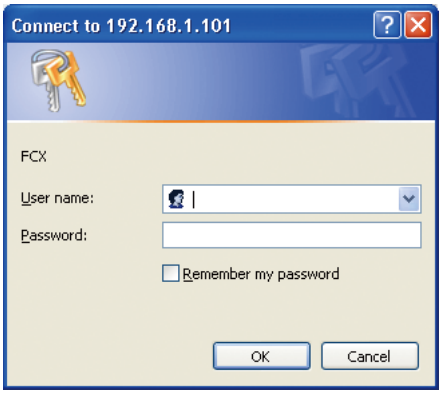

User Account = “stardom”

Password = “YOKOGAWA”

(2) Click the Maintenance Menu

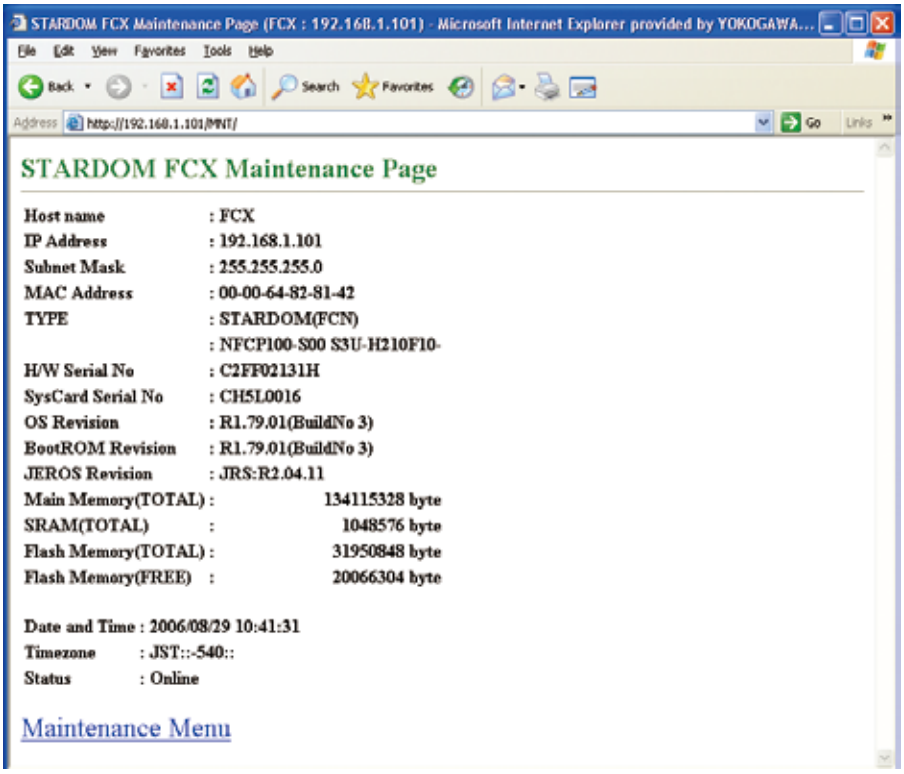

(3) Click the Reboot

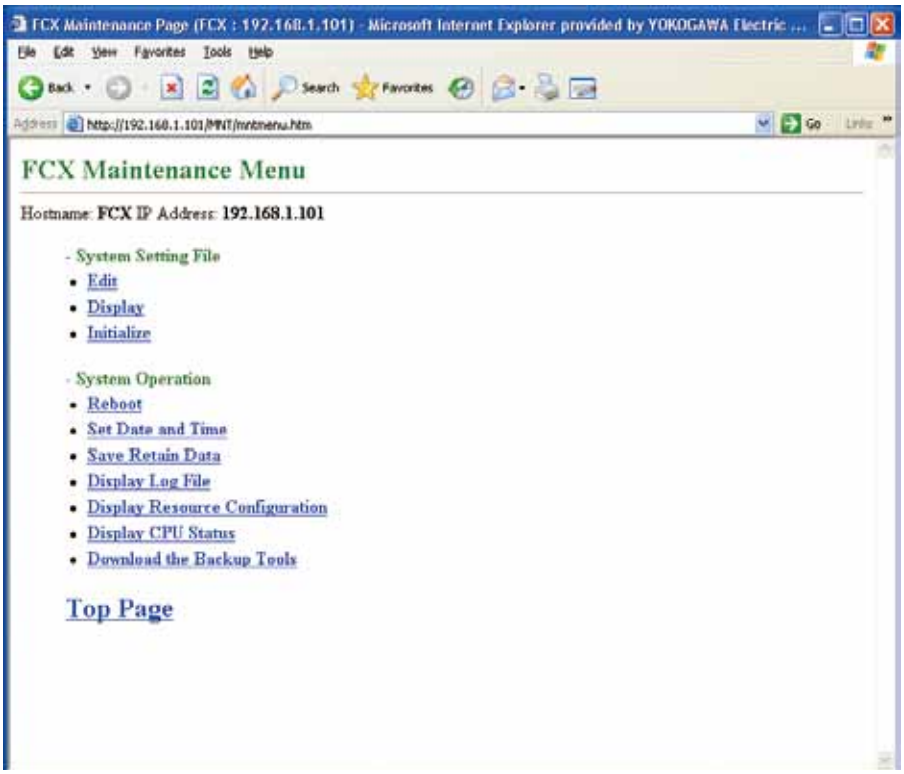

(4) Select the Reboot (IP Address Setting Mode) and press “OK”

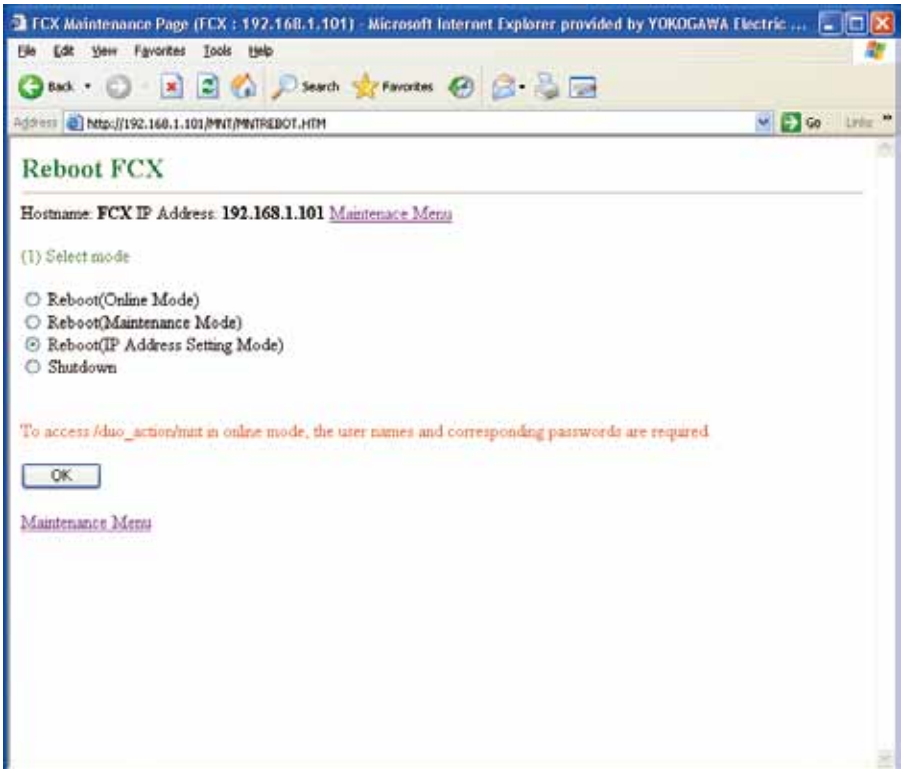

FCN restarts on IP address setting mode.

Setting IP address

Start the resource configurator software on PC and wait for a message “A new controller is connected”.

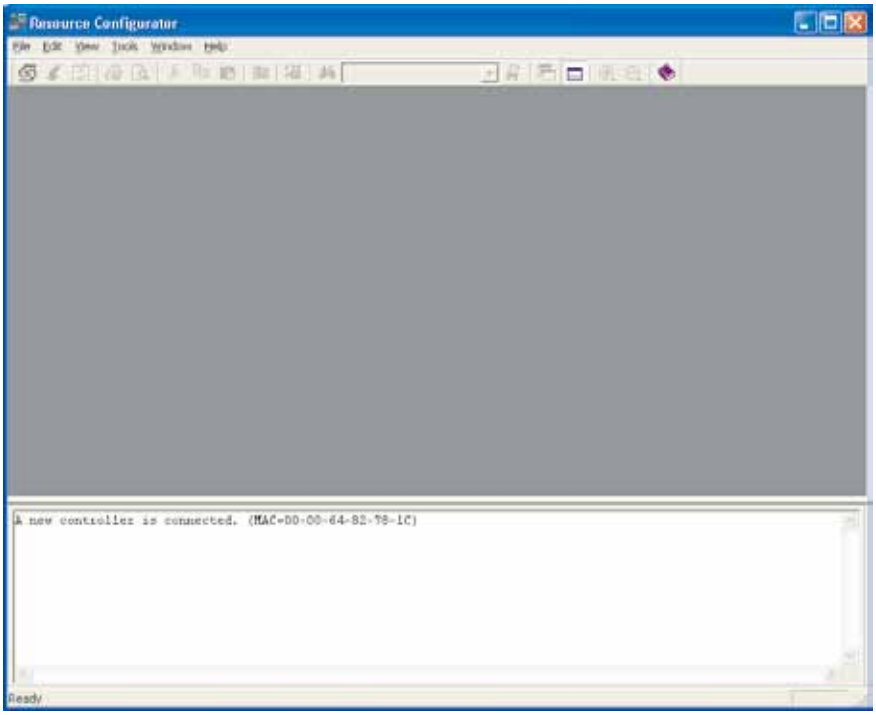

When the message appears, select the “Setting IP Address” on “File” menu.

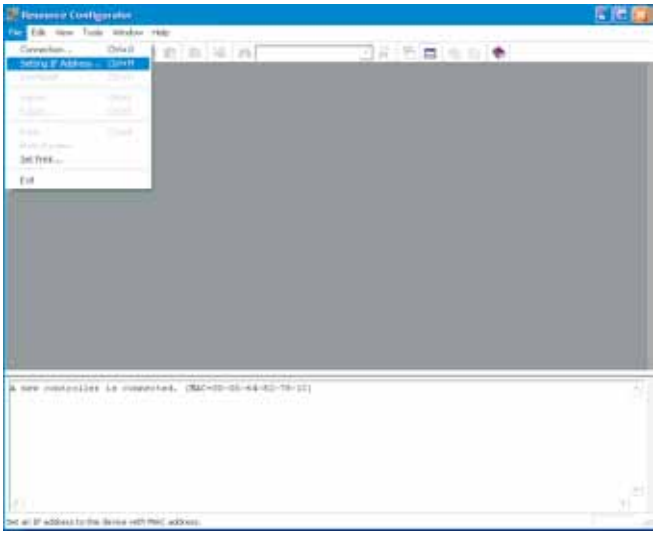

IP address, Subnet mask, Gateway and Time zone parameters are set on this dialogue window.

Reboot the FCN after the setting.

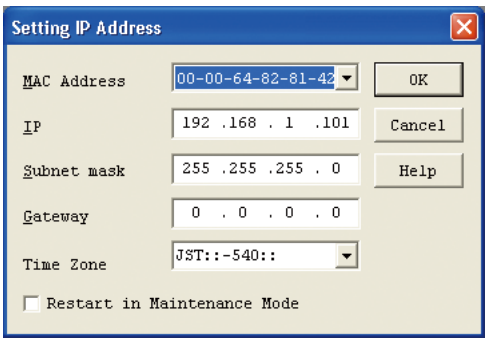

4.3.2 Modification of serial port setting

In the case of using the Modbus RTU as external interface of ASIU, this operation is required.

ASIU has two communication ports and all initial setting data are as follows.

Baudrate	=9600
DataBitLength	=8
StopBitLength	=1
Parity	=NONE

After FCN mode is changed to maintenance mode, the communication port is set with the maintenance window on web browser.

Refer to the guide of STARDOM FCN/FCJ (IM 34P02Q01-01E) about the method of modification.

Setting parameters are “COM1 Port Setting File” or “COM2 Port Setting File”.

5. OPC DA 2.0 Interface

This chapter explains the OPC DA 2.0 interface of ASGW and ASIU.

Adding an OPC server of STARDOM to the system allows ASGW/ASIU to have the OPC interface. There is no need to add any special settings to the ASGW/ASIU application. Mapping Modbus data of ASIU to ASGW allows ASIU data to be read and written by accessing ASGW through the OPC interface.

5.1 System Configuration

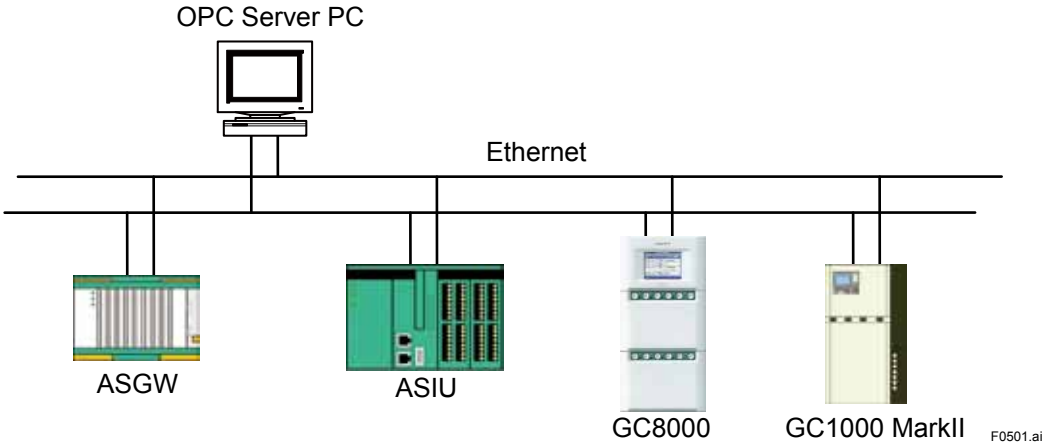

5.2 Software Required

ASGW do not require additional software to be installed for OPC. The STARDOM software listed below is required for a PC on which an OPC server is to be installed.

Model	Item	Remark
NT781AJ	FCN/FCJ OPC Server for Windows	
NT783AJ	Redundant Network Function License for FCN/FCJ OPC Server	Required only for redundant network.

5.3 Installation and Settings

For installation and settings of the OPC server and the duplexed package, refer to their respective user's manuals or online help.

5.4 Update rate

Data for the OPC interface is updated every second. Therefore, a delay of about one second may occur when the OPC client reads the latest data from analyzers.

TIP

Separating OPC data from Modbus data causes hogging of the CPU. To avoid this, the OPC data update rate is set to 1 second while the Modbus communication is updated every 200 ms.

5.5 List of OPC Data Names

The table below shows a list of ASGW/ASIU's data names that can be accessed via STARDOM OPC DA2.0 server. Data names are common to ASGW and ASIU.

ASGW/ASIU's node name designated in the setting file on the STARDOM OPC server is assigned to "Node."

OPC data name example 1: ASGW01!@GV.IREG2(312) represents the address 32312 of the Modbus data of ASGW01.

OPC data name example 2: ASGW01!@GV.COIL2(1000) represents the address 03000 of the Modbus data of ASGW01.

● COIL (00001 to 09000)

Read/write is possible. Writing data onto unmapped areas is ignored. Unmapped address data is always read as "FALSE".

OPC Data Name	OPC Data Type	Function	Remark
Node!@GV.COIL0(n)	VT_BOOL	Modbus Address 00001 to 01000	n = 1 to 1000
Node!@GV.COIL1(n)	VT_BOOL	Modbus Address 01001 to 02000	n = 1 to 1000
Node!@GV.COIL2(n)	VT_BOOL	Modbus Address 02001 to 03000	n = 1 to 1000
Node!@GV.COIL3(n)	VT_BOOL	Modbus Address 03001 to 04000	n = 1 to 1000
Node!@GV.COIL4(n)	VT_BOOL	Modbus Address 04001 to 05000	n = 1 to 1000
Node!@GV.COIL5(n)	VT_BOOL	Modbus Address 05001 to 06000	n = 1 to 1000
Node!@GV.COIL6(n)	VT_BOOL	Modbus Address 06001 to 07000	n = 1 to 1000
Node!@GV.COIL7(n)	VT_BOOL	Modbus Address 07001 to 08000	n = 1 to 1000
Node!@GV.COIL8(n)	VT_BOOL	Modbus Address 08001 to 09000	n = 1 to 1000

● DSCI (10001 to 19000)

Read only. Writing through the OPC interface does not cause an error, but nothing can be written onto the Modbus area of ASGW/ASIU. Unmapped address data is always read as "FALSE".

OPC Data Name	OPC Data Type	Function	Remark
Node!@GV.DSCI0(n)	VT_BOOL	Modbus Address 10001 to 11000	n = 1 to 1000
Node!@GV.DSCI1(n)	VT_BOOL	Modbus Address 11001 to 12000	n = 1 to 1000
Node!@GV.DSCI2(n)	VT_BOOL	Modbus Address 12001 to 13000	n = 1 to 1000
Node!@GV.DSCI3(n)	VT_BOOL	Modbus Address 13001 to 14000	n = 1 to 1000
Node!@GV.DSCI4(n)	VT_BOOL	Modbus Address 14001 to 15000	n = 1 to 1000
Node!@GV.DSCI5(n)	VT_BOOL	Modbus Address 15001 to 16000	n = 1 to 1000
Node!@GV.DSCI6(n)	VT_BOOL	Modbus Address 16001 to 17000	n = 1 to 1000
Node!@GV.DSCI7(n)	VT_BOOL	Modbus Address 17001 to 18000	n = 1 to 1000
Node!@GV.DSCI8(n)	VT_BOOL	Modbus Address 18001 to 19000	n = 1 to 1000

IREG (30001 to 39000)

Read only. Writing through the OPC interface does not cause an error, but nothing can be written onto the Modbus area of ASGW/ASIU. Unmapped address data is always read as “0”.

OPC Data Name	OPC Data Type	Function	Remark
Node!@GV.IREG0(n)	VT_UI2	Modbus Address 30001 to 31000	n = 1 to 1000
Node!@GV.IREG1(n)	VT_UI2	Modbus Address 31001 to 32000	n = 1 to 1000
Node!@GV.IREG2(n)	VT_UI2	Modbus Address 32001 to 33000	n = 1 to 1000
Node!@GV.IREG3(n)	VT_UI2	Modbus Address 33001 to 34000	n = 1 to 1000
Node!@GV.IREG4(n)	VT_UI2	Modbus Address 34001 to 35000	n = 1 to 1000
Node!@GV.IREG5(n)	VT_UI2	Modbus Address 35001 to 36000	n = 1 to 1000
Node!@GV.IREG6(n)	VT_UI2	Modbus Address 36001 to 37000	n = 1 to 1000
Node!@GV.IREG7(n)	VT_UI2	Modbus Address 37001 to 38000	n = 1 to 1000
Node!@GV.IREG8(n)	VT_UI2	Modbus Address 38001 to 39000	n = 1 to 1000

HREG (40001 to 49000)

Read/write is possible. Writing data onto unmapped areas is ignored. Do not write data onto the DSCI-mapped address since the DCS may read wrong values until ASGW/ASIU reads the next data from devices. Unmapped address data is always read as “0”.

OPC Data Name	OPC Data Type	Function	Remark
Node!@GV.HREG0(n)	VT_UI2	Modbus Address 40001 to 41000	n = 1 to 1000
Node!@GV.HREG1(n)	VT_UI2	Modbus Address 41001 to 42000	n = 1 to 1000
Node!@GV.HREG2(n)	VT_UI2	Modbus Address 42001 to 43000	n = 1 to 1000
Node!@GV.HREG3(n)	VT_UI2	Modbus Address 43001 to 44000	n = 1 to 1000
Node!@GV.HREG4(n)	VT_UI2	Modbus Address 44001 to 45000	n = 1 to 1000
Node!@GV.HREG5(n)	VT_UI2	Modbus Address 45001 to 46000	n = 1 to 1000
Node!@GV.HREG6(n)	VT_UI2	Modbus Address 46001 to 47000	n = 1 to 1000
Node!@GV.HREG7(n)	VT_UI2	Modbus Address 47001 to 48000	n = 1 to 1000
Node!@GV.HREG8(n)	VT_UI2	Modbus Address 48001 to 49000	n = 1 to 1000

NOTE

Although the input relay and input register are read-only data, they are not write protected in the OPC interface. They should be engineered so that they are write protected from the OPC client application. Otherwise, if ASGW/ASIU is connected to DCS, the value of input relay or input register that has been accidentally written via the OPC interface may be read by the DCS.

Revision Information

- Title : ASIU Analyzer Sever Interface Unit Software
- Manual No. : IM 11B06F01-01E

Oct. 2006/1st Edition
Newly published

Jan. 2010/2nd Edition
P.3-3 Addition of Input register.

Jun. 2011/3rd Edition
Addition of chapter 5.

Nov. 2011/4th Edition
Revised for “GC8000”.