# General Specifications

GC1000 MarkII
Modbus Communication

GC1000 MarkII

**GS 11B03G02-02E**

## 1. GENERAL

The Modbus protocol is used for DCS communication with the GC1000 MarkII.

This communication protocol was first established for the Programmable Logic Controller (PLC) made by Gould, Inc., and is now used as a standard communication protocol between different systems.

In this specification we describe the Modbus communication as it is used for the GC1000 MarkII.

For specifics on Modbus, please refer to the MEDICON document Modbus Protocol Reference Guide.

### [Modbus Configuration]

Modbus was started as a method to allow a master device to control multiple slave devices. Each device with a device number is connected to the master.

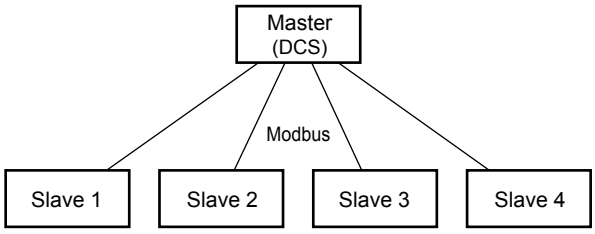


F0101.ai

**Figure 1.1 Modbus configuration**

The master can send a query (i.e. poll) or command to a slave on a regular basis or when required. In either case, the master starts signal transmission and the slave responds.

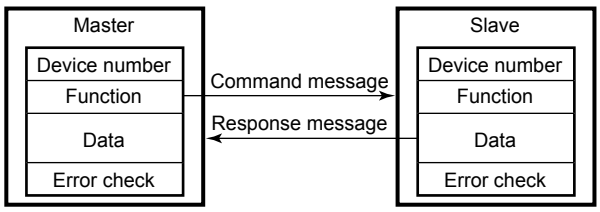


F0102.ai

**Figure 1.2 Master-slave command and response cycle**

A message transmitted between devices contains the device number, function, data, and error check code. The function is encoded and depends on the message characteristics and data type.

The error check code checks the validity of the entire message.

## 2. Specifications

### 2.1 Communication Transmission Modes

There are two modes for signal transmission between the master and slave; RTU (Remote Terminal Unit) mode and ASCII mode.

GC1000 MarkII also supports Modbus/TCP.

**[Communication]**

| Kind | Mode | Support Type |
|---|---|---|
| Sirial communication | ASCII | Slave |
| | RTU | Slave |
| Ethernet | Modbus/TCP | Server |

**[Serial communication]**

| Item | ASCII mode | RTU mode |
|---|---|---|
| Number of data bits | 7 bits (ASCII) | 8 bits (binary) |
| Message starting character | Colon “ : ” | None |
| Message ending character | Carriage return/line feed “<cr><lf>” | None |
| Message length | 2N+1 | N |
| Time interval of data | 1 second or shorter | 24 bit-time or shorter |
| Error detection | LRC (logical redundancy check) | CRC-16 (cyclic redundancy check) |

**[Ethernet]**

| Item | TCP Mode |
|---|---|
| Protocol | Modbus/TCP |
| No. of Session | 2 (Max.) |
| Port No. | 502 |

### 2.2 Message Configuration

A message consists of four fields: device number, function, data and error check. It is always sent in this sequence.

| |
|---|
| Device number |
| Function |
| Data |
| Error check |

In ASCII mode, a colon “:” is the starting character and carriage return/line feed “<cr><lf>” is the ending message string. The portion between the starting character and ending string is the message body. The communication message is entirely ASCII codes, i.e. the message excluding the starting character and ending string consists of “0” to “9” and “A” to “F” representing hexadecimal numbers.

YOKOGAWA
Yokogawa Electric Corporation
2-9-32, Nakacho, Musashino-shi, Tokyo, 180-8750 Japan
Tel.: 81-422-52-5617 Fax.: 81-422-52-6792

GS 11B03G02-02E

4th Edition Jun. 2010 (YK)

In RTU mode, the message consists of binary codes and can be transmitted faster than in ASCII mode. Signal intervals of more than 24 bit-time in the transmission line, identify the start of a new message. In this system, the time-out is 10 ms regardless of the transmission speed.

In TCP mode, the foregoing message is displayed at an unique header (6 bite) of Modbus/TCP (Device No. is ignored).

**(1) Device number**

The device number is user pre-assigned for each slave and ranges from 1 to 240. This number is the same as the Analyzer ID. The master performs signal transmission to each slave simultaneously.

Each slave checks the device number in the message to determine whether the received message is directed to the slave itself and if so, returns a response message.

**(2) Functions**

The master specifies the function to be executed by the slave. The GC1000 MarkII supports the following functions in the Modbus protocol.

| Function No. | Function | Description |
|---|---|---|
| 01 | Coil status read | Reads the ON/OFF status of a series of coils. |
| 02 | Input relay status read. | Reads the ON/OFF status of a series of input relays. |
| 03 | Holding register content read. | Reads the current value of a series of holding registers. |
| 04 | Input register content read. | Reads the current value of a series of input registers. |
| 05 | Single coil status change | Forcibly changes the status of a coil. |
| 06 | Single holding register write | Writes a value to a holding register. |
| 08 | Loop back test | Sends back the same message as the command message. |

**(3) Data**

There are two types of data “coil/relay” in bits and “register” as 16-bit data. The coil uses two values (ON/OFF or 0/1), while the register ranges from 0 to 65535. Up to 8000 coils/relays or registers can be accessed and 1 to 8000 addresses are assigned. However the maximum number of addresses which can be read at a time is limited as follows:

| | | Modbus name | Address | Max. read | Application |
|---|---|---|---|---|---|
| Device | | Device number | | | Analyzer number |
| Contact | R/W | Coil | 0XXXX | 800 | Command |
| | R | Input relay | 1XXXX | 2000 | Status |
| Data | R/W | Holding resister | 4XXXX | 100 | Set value |
| | R | Input resister | 3XXXX | 125 | Measured value |

xxxx: 0001 to 8000

**(4) Error check**

All messages are followed by an error check code to detect a Signal transmission error (i.e. bit changes). In ASCII mode, an error check code according to LRC(logical redundancy check) is used. In RTU mode, an error check code according to CRC-16 (cyclic redundancy check) is used.

## 2.3 Slave Response

When the slave receives a command from the master, it performs an error check of the command then sends back a normal response if the command message is normal, or an error response if the command message is foulty.

**(1) Normal response**

For the single coil status change, single holding registe write, and loop back function, the same message as the command message is sent back. For the multiple coil status change and the multiple holding register write, the parts of the message (the device number, the start number and the number of the coils/the holding registers) are sent back as the response message. For the read function, the device number and function added with the read data are sent back as the response message. If an address to which data is not allocated is read, an error is not generated but zero (0) is responded as the read data.

**(2) Error response**

If the command message is faulty, the slave does not execute the command but sends back an error response.

The master can check whether the command is accepted successfully by checking the function in the response message. If an error is identified, the details can be checked from the error code.

| |
|---|
| Device number |
| Error function (command function + 128) |
| Error code |
| Error check |

| Error code | Description |
|---|---|
| 01 | Function code error (non-existent function) |
| 02 | Address error of coil, input relay, or register (more than 8000) |
| 03 | Number error of coils, input relays, or registers (registers: more than 125, coils/input relays:more than 2000) |
| 04 | An unrecoverable error occurred on the slave while the command message was being executed. |
| 11 | Set data error (out of range) |

**(3) No response**

In the following cases, the slave ignores the command message and does not send back a response (no response).

1. When a transmission error (overrun, framing error, parity error or CRC error) is detected in the command message
2. When the device number in the command message does not match the slave number assigned to the slave

Note: The master should set a timer to watch the response from the slave, and re-send the same command or the message to the slave when the slave does not respond within the time set by the timer. We recommend 3 to 5 seconds for the timer.

## 3. Communication Specifications

### [Serial comm.]

For Modbus communication, the DCS communication port of the GC1000 MarkII is used.

The GC1000 MarkII has one DCS communication port.

Communication standard:
RS-422
Start-stop synchronization:
Start bit 1, data bit 7/8, parity bit 1, stop bit 1
Communication speed:
1200, 2400, 4800, 9600, 19200 bps (selectable)
Error detection: Odd number parity, even number parity, none(selectable)
Transmission mode: ASCII mode/RTU mode

### [Ethernet]

LAN specification

Standard: IEEE802.3 compliance
Phsical Layer: 100Base-TX or 100Base-FX
No. of physical port: 2 ports (Max.)
Max. length: 100 m (100Base-TX)
2 km (100Base-FX)

## 4. System Configuration

### [Serial comm.]

For the communication port, an RS-422 standard serial port is used. The signal can be converted to RS-232C using an external communication converter (K9404LA).

This communication converter has a protection feature that automatically disconnects communication if the explosion protection feature of the GC1000 MarkII is compromised.

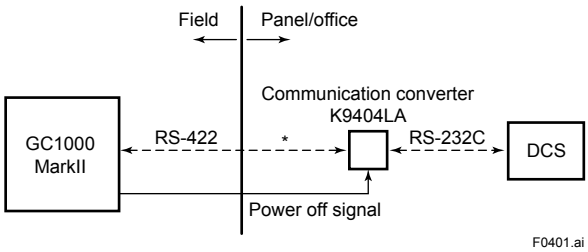


* : Dedicated communication line (RS-422)
3 pairs of 0.75 $mm^2$ twisted pair
Cable outside diameter: 10 to 15.9 mm
Max. length: up to 1 km
Flameproof packing cable must be constructed on the analyzer side.
Refer to "GC1000 MarkII Installation Manual (TI 11B03A03-13E)."

Note: Parts, cables, and construction materials must be prepared by the customer.

**Figure 4.1 GC1000 MarkII (Serial comm.)**

### [Ethernet]

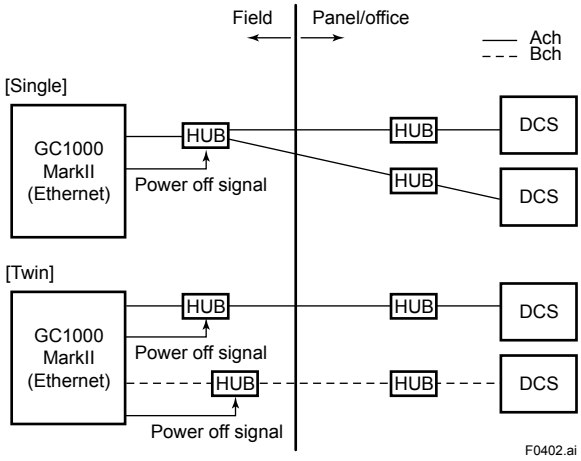


**Figure 4.2 GC1000 MarkII (Ethernet)**

Single: It is connected by A channel only.
Twin: Both A channel and B channel are connected independently. The connection is built up by each session. The destination uses a physical IP address.

## 5. Communication Data

### 5.1 Coil (command contact)

**(1) Run command**
Commands the start of continuous analysis to the GC1000 MarkII.

**(2) Stop command**
Commands the stop of continuous analysis to the GC1000 MarkII.

**(3) Time setting request**
Requests the GC1000 MarkII to set the device clock to values in addresses 40001-40004. Before this request is carried out, the time setting should be done.

**(4) Stream sequence command**
Execute a selected stream sequence on GC1000 MarkII. This command is not accepted when the status is on Calibration/Validation including the status waiting for this change or on stream(1 cycle) including the status waiting for this change.

**(5) Calibration/Validation command**
Execute a selected calibration or validation stream on GC1000 MarkII. The correspondence of the calibration or validation number and the address is as follows.

Cal.stream 1-3: 1-3, Val. Stream 1-3: 4-6. This command is not accepted when the status is on stream(1 cycle) including the status waiting for this change or calibration method is automatic or manual.

**(6) Stream(continuous) command**
Execute a selected measurement stream continuously on GC1000 MarkII. This command is not accepted when the status is on stream(1 cycle) including the status waiting for this change.

## 5.2 Input Relay (status contact)

**(1) Analyzer normal**
The GC1000 MarkII is normal. A 1 is displayed if there is no active level 1 (critical failure) or level 2 (minor failure) alarm.

**(2) Analyzer error**
The GC1000 MarkII is faulty. A 1 is displayed if there is at least one active level 1 (critical failure) alarm.

**(3) Analyzer status change**
A 1 is displayed when a new alarm occurs on the GC1000 MarkII or GCIU. After this status is read and when at least one alarm status is read, this bit is automatically reset to 0.

**(4) Measuring (run mode)**
The GC1000 MarkII is analyzing. A 1 is displayed when it is in RUN mode. Otherwise, 0 is displayed.

**(5) Stop (ready mode)**
The GC1000 MarkII is not analyzing. A 1 is displayed when it is in READY mode. Otherwise, 0 is displayed.

**(6) Maintenance (other modes)**
If the GC1000 MarkII is in MANUAL, LAB, or PAUSE mode, a 1 is displayed. Otherwise, 0 is displayed.

**(7) Data update**
New analysis data is now available from the GC1000 MarkII. Data update is automatically reset to 0 once data update is read and at least one analysis value is read.

**(8) Data valid**
Data is valid for a particular peak on the GC1000 MarkII. For analysis peaks, the analysis value must be between the upper and lower limits and the retention time is at or below the upper limit. For operation peaks, the data to be used for operation is valid. A 1 is displayed when data is valid.

**(9) Alarm status**
The alarm status of the GC1000 MarkII is displayed for each alarm number. If an alarm occurs, 1 is displayed. Otherwise, 0 is displayed. The alarm number is 1 to 100 for level 1 alarms, 101 to 200 for level 2 alarms of the GC1000 MarkII.

**(10) Calibration factor update**
The GC1000 MarkII has new calibration factors for a particular stream. The address is reset to 0 after the calibration factor update is read and when at least one calibration factor is read.

**(11) Executing the stream sequence**
The corresponding stream sequence on the GC1000 MarkII is being executed.

**(12) Not Executing the status change command**
A 1 is displayed if the corresponding status change command which is stream(continuous) command, calibration/validation command or stream sequence command is not accepted. The coil is reset when this command is accepted next time.

## 5.3 Holding Register (set data)

**(1) Time setting value**
This is a set of four registers used by the DCS to set the device clock. When the time setting request coil (address 00003 for GC1000 MarkII is activated, these entries are used for the year, month/day, hour, and minute/second.

**Example : September 25, 1996, 15:23:10**

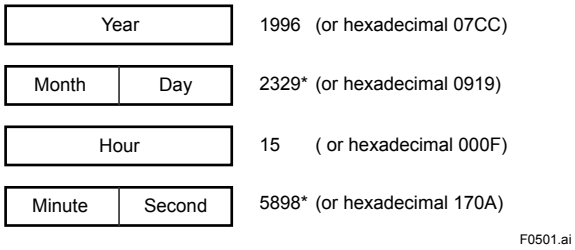


*: month/day value = month x 256 + day,
minute/second value = mintue x 256 + second

**(2) Range change**
This address allows to change the range which is shown by the specified stream and peak number via Modbus. An integer entry is required. This feature allows for the selection of a change of analysis to a particular stream in a multi-stream application.

**(3) Analysis value**
These addresses display the same data as the analysis value in the input register, however values cannot be written to these addresses. Only These addresses support real number (floating point) form.

## 5.4 Input Register (measured data)

**(1) Stream number**
The currently active stream number on the GC1000 MarkII is displayed. In READY or MANUAL mode, the stream number is 0. In LAB mode, the stream number is 32.

**(2) Starting peak number**
The starting peak number assigned to each task on the GC1000 MarkII is displayed. The number is 0 if no peak is assigned.

**(3) Peak number**
Peak number assigned to each stream on the GC1000 MarkII is displayed. See the figure below.

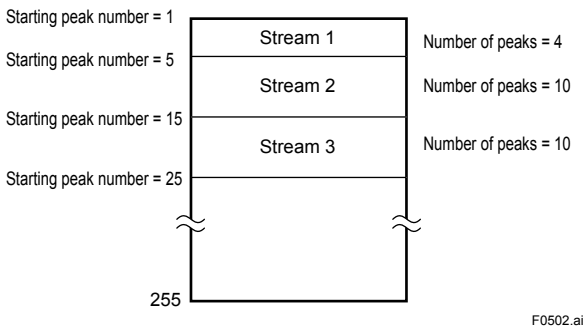


**Figure 5.1 Example of peak allocation**

**(4) Sampling time**
This register contains the latest sampling time for each stream on the GC1000 MarkII. Hour and minute are stored.

**Example: 15:23**

| Hour | Minute |
|---|---|

3863* (or hexadecimal 0F17)

F0503.ai

* : hour/minute value = hour x 256 + minute

**(5) Analysis value**
This register contains each analysis value. The value is represented by a fraction to the full scale or by a real number (floating point format). The full scale is set in advance for each analysis value and the scaling factor is user selectable as either 9999 or 65535. The real number format conforms to the IEEE standard and requires two registers per peak.

The fraction format is calculated as follows:

(Analysis value x Scaling factor)/Full scale value.

For example, if the analysis result is 5 ppm and the range is 0-20 ppm

The value read using a scaling factor of 9999 is (5 x 9999) / 20 = 2499

$$\frac{5}{20} \times 9999 = 2499$$

F0504.ai

For the real number format, units (such as %, ppm, etc.) are considered. For example, the real number value converted from 1.5 is directly transmitted as 1.5 %. The GC1000 MarkII updates analysis values at the end of each cycle.

**(6) Retention time**
This register contains the retention time for each peak of the GC1000 MarkII. The unit is in seconds.

**(7) Calibration factor**
This register contains the calibration factor for each peak of the GC1000 MarkII. Since the factors are in the range of 0.000 to 9.999, each value is multiplied by 1000 and displayed as integers (i.e. 0000 to 9999).

## 7. Adress Table

| | Name | Address | Description |
|---|---|---|---|
| Coil | Run command | 00001 | Received the message by the master, the slave reset. |
| | Stop command | 00002 | Same as above |
| | Time setting request | 00003 | Same as above |
| | Stream sequence command | 0001P | Same as above, P: stream sequence number(1 to4) |
| | Calibration/Validation command | 0002M | Same as above, M: 1 to 3(Cal.1 to 3), 4 to 6(Val.1 to 3) |
| | Stream(continuous) command | 001TT | TT: Stream number(01 to 31) |
| Input relay | Analyzer normal | 10001 | |
| | Analyzer error | 10002 | |
| | Analyzer status change | 10003 | Reset when the alarm status is read after alarm status change is read. |
| | Measuring | 10004 | |
| | Stop | 10005 | |
| | Maintenance | 10006 | |
| | Analyzer server normal | 10008 | |
| | Analyzer server error | 10009 | |
| | Executing the Steam seguence | 1001P | P: Stream sequence number(1 to 4) |
| | Not executing Stream (continuous) command | 10021 | |
| | Not executing calibration/ validation command | 10022 | |
| | Not executing Stream sequence command | 10023 | |
| | Executing Calibration/Validation | 1003M | M: 1 to 3(Cal.1 to 3), 4 to 6(Val.1 to 3) |
| | Data update | 101TT | Reset when the analysis value is read after data update is read. (TT: Stream Number) |
| | Calibration factor update | 102TT | Reset when the calibration factor is read after calibration factor update is read. (TT: Stream Number) |
| | Data valid | 11CCC | CCC: Peak number |
| | Alarm status | 12AAA | AAA: Alarm number (001-200) |
| | Concentration error | 13CCC | CCC: Peak number |
| | Retention time out | 14CCC | CCC: Peak number |
| | Invalid coefficient of variation | 15CCC | CCC: Peak number |
| | Invalid tailing coefficient | 16CCC | CCC: Peak number |
| Holding register | Time setting request | 40001- 40004 | Year (40001), month/day (40002), hour (40003), minute/second (40004) |
| | Analysis value | 41DDD | Read only (Write disabled)<br>DDD(real format) = CCC*2-1(CCC: Peak number) |
| | Change stream sequence settings | 43PTT | P: Stream sequence number(1 to 4), TT: Action stream number(1 to 31) |
| | Range change | 4NNQQ | NN: Stream number + 40, QQ: Peak number |
| Input register | Stream number | 30001 | |
| | Starting peak number | 301TT | TT: Stream Number |
| | Peak number | 302TT | TT: Stream Number |
| | Sampling time | 303TT | TT: Stream Number |
| | Analysis value | 31CCC/-31DDD | DDD(real format): CCC*2-1(CCC: Peak number) |
| | Retention time | 32CCC | CCC: Peak Number |
| | Calibration factor | 33CCC | CCC: Peak Number |
| | Current stream sequence settings | 35PTT | P: Stream sequence number(1 to 4), TT: Action stream number(1 to 31) |