General Specifications

AXFA14G/C Magnetic Flowmeter Remote Converter

ADMAG AXF™

GS 01E20C02-01E

The AXFA14 magnetic flowmeter remote converter is a sophisticated product with outstanding reliability and ease of operation, developed on the basis of decades of field-proven experience.

The AXFA14 employs an LCD indicator, infra-red switches, and "Easy Setup" parameters to ensure substantially improved ease of maintenance.

The combination of a replaceable electrode type flowtube and diagnostics to detect the adhesion level on the electrodes dramatically improves maintainability.

The AXFA14 also employs the fluid noise free "Dual Frequency Excitation Method" and the newly added "Enhanced Dual Frequency Excitation Method" as an option for more difficult applications to ensure greater stability and quicker response.

Note: The "Dual Frequency Excitation Method" is Yokogawa's unique technology.

Fieldbus communication type is also available.

■ FEATURES

Refer to GS 01E20F02-01E for FOUNDATION™ fieldbus communication type and GS 01E20F12-01E for PROFIBUS PA communication type marked with "◇"

● User-oriented Functionality

Fluid Adhesion Level Diagnosis

By constantly monitoring the level of insulating substance on the electrodes, it is possible to determine when maintenance is required.
With the utilization of an optional replaceable electrode type flowtube, in cases of severe adhesion, the electrodes can be easily removed from the flowmeter and cleaned.

Clear and Versatile Indications

The LCD indicator employs a large, backlit full dot-matrix, that can facilitate various displays.
One to three lines are available. When there is an alarm condition, a full description of the countermeasure is indicated.

"Easy Setup" Parameters "◇"

The most frequently used parameters are arranged in a group at the top.
The infra-red switches enable the users to set parameters without opening the cover.

Operation Immediately after Installation

The AXFA14 is shipped with the main parameters completely set. Therefore, the AXFA14 can be operated immediately after installation and wiring.

Compact and Light-weight Converter

The AXFA14 employs a compact structure suitable for on-site installation.

Explosion proof Lineup

Explosion proof types are available for hazardous areas.

● Expansion of Product Lineup

Improved Accuracy Specification

The standard accuracy is 0.35% of reading. Also available is an optional high accuracy calibration rated at 0.2% of reading.

● Enhanced Performance and Specifications

Enhanced Dual Frequency Excitation Method

The "Enhanced Dual Frequency Excitation Method" can be optionally selected.
For difficult applications such as for high concentration slurries or low conductivity fluid, extremely stable measurements can be realized.

Improved Minimum Conductivity

The newly designed AXF converter permits the measurement of fluids with conductivity as low as 1μS/cm.

High-Speed Pulse Output: "◇"

The pulse rate now goes up to 10,000 pps (pulse/second) for use with high speed applications such as in short time batch processes.

Versatile Input/ouput Function "◇"

CONTENTS

Features	P 1
Standard Specifications	P 2
Hazardous Area Classification	P 4
Standard Performance	P 5
Normal Operating Conditions	P 6
Accessories	P 6
Model and Suffix Code	P 7
Terminal Configuration, Terminal Wiring	P 7
Optional Specifications for AXFA14 Remote Converter	P 8
External Dimensions	P 10
Ordering Information	P 12

YOKOGAWA ◆

Yokogawa Electric Corporation
2-9-32 Nakacho, Musashino-shi, Tokyo 180, Japan
Tel.: +81-422-52-4443 Fax.: +81-422-52-2018

GS 01E20C02-01E
©Copyright June 2003
14th Edition Sep. 2015

■ STANDARD SPECIFICATIONS

● Converter

The contents of (*1) and (*2) described in the converter specifications are follows.

*1: Select two points from: one pulse output, one alarm output, one status input, or two status outputs.

*2: For models without an indicator, the hand-held terminal is necessary to set parameters.

Excitation Method: (Combined with AXF Remote Flowtube)

- Standard dual frequency excitation:
  Size 2.5 to 400 mm (0.1 to 16 in.)
- Enhanced dual frequency excitation:
  Size 25 to 200 mm (1.0 to 8.0 in.)
  (Optional code HF1 or HF2)

Input Signal (*1) "◇":

One Status Input: Dry contact
Load resistance: 200 Ω or less (ON), 100 kΩ or more (OFF)

Output Signals "◇":

- One Current Output: 4 to 20 mA DC (load resistance: 750 Ω maximum, including cable resistance)
- One Pulse Output (*1):
  Transistor contact output (open collector)
  Contact capacity: 30 V DC (OFF), 200 mA (ON)
  Output rate: 0.0001 to 10,000 pps (pulse/second)
- One Alarm Output (*1):
  Transistor contact output (open collector)
  Contact capacity: 30 V DC (OFF), 200 mA (ON)
- Two Status Outputs (*1):
  Transistor contact output (open collector)
  Contact capacity: 30 V DC (OFF), 200 mA (ON)

Communication Signals "◇":

BRAIN or HART communication signal
(Superimposed on the 4 to 20 mA DC signal)
Distance from power line: 15 cm (6 in.) or more (Parallel wiring should be avoided.)

BRAIN:

Communication Distance:
Up to 1.5 km (0.93 miles), when polyethylene insulated PVC-sheathed cables (CEV cables) are used.
Communication distance varies depending on the type of cable and wiring used.

Load Resistance:
250 to 450 Ω (including cable resistance)

Load Capacitance: 0.22 μF or less

Load Inductance: 3.3 mH or less

Input Impedance of Communicating Device:
10 kΩ or more (at 2.4 kHz)

HART:

Load Resistance:
250 to 600 Ω (including cable resistance)

Note: HART is a registered trademark of the HART Communication Foundation.

Data Security During Power Failure:
Data (parameters, totalizer value, etc.) storage by EEPROM. No back-up battery required.

Indicator (*2):
Full dot-matrix LCD (32×132 pixels)

Lightning Protector:
The lightning protector is built into the excitation current output, the current output, the signal common, pulse/alarm/status input and output terminals. When optional code A is selected, the lightning protector is built into the power terminals.

Protection:
General-purpose Use/Sanitary Type/TIIS Flameproof type:
IP66, IP67
Explosion proof type except TIIS:
In case of explosion proof type except TIIS, refer to description of "Enclosure" in "HAZARDOUS AREA CLASSIFICATION".

Coating:
Case and Cover: Corrosion-resistant coating
Coating Color; Mint green (Munsell 5.6 BG 3.3/2.9 or its equivalent)

Converter Material:
Case and Cover: Aluminum alloy

Mounting/Shapes:

- Mounting: 2-inch pipe
- Electrical Connection: ANSI 1/2 NPT female
  ISO M20 ×1.5 female
  JIS G1/2 female
- Terminal Connection: M4 size screw terminal

Grounding:
Grounding resistance 100 Ω or less
When optional code A is selected, grounding resistance 10 Ω or less shall be applied.

* In case of explosion proof type except TIIS, follow the domestic electrical requirements as regulated in each country.

* In case of TIIS Flameproof type, refer to description of "HAZARDOUS AREA CLASSIFICATION".

Combined Remote Flowtube:

- AXFA14 Converter can be combined with size 2.5 to 400 mm (0.1 to 16 in.) of AXF Remote Flowtube.
- If a combined converter is changed from AXFA14 to AXFA11 or vice versa, a new meter factor must be adjusted by flow calibrations.
- In case that size 250 mm (10 in.) or larger is used in low conductivity or high concentration slurries, use the AXFA11 Converter.

Functions "◇"

How to Set Parameters (*2):
The indicator's LCD and three infra-red switches enable users to set parameters without opening the case cover. Parameters can also be set with the configuration tool (Such as HHT (handheld terminal) or FieldMate™, etc.). The language for the HHT is English only.

Displayed Languages (*2):
Users can choose a language from among English, Japanese, German, French, Italian, Spanish.

All Rights Reserved. Copyright © 2003, Yokogawa Electric Corporation

Instantaneous Flow Rate/Totalized Value Display Functions (for models with an indicator) (*2):

The full dot-matrix LCD enables user selections of displays from one line to three lines for:

- Instantaneous flow rate
- Instantaneous flow rate (%)
- Instantaneous flow rate (bar graph)
- Current output value (mA)
- Totalized forward-direction flow rate
- Totalized reverse-direction flow rate
- Totalized differential flow rate
- Tag No.
- Results of electrode adhesion diagnostics
- Communication type

Totalizer Display Function (*2):

The flow rate is counted one pulse at a time according to the setting of totalization pulse weights. For forward and reverse flow measurement functions, the totalized values of the flow direction (forward or reverse) and the flow direction are displayed on the indicator together with the units. The difference of totalized values between the forward and reverse flow rate can be displayed. Totalization for the reverse flow rate is carried out only when “Forward and reverse flow measurement functions” is selected.

Damping Time Constant (*2):

Time constant can be set from 0.1 second to 200.0 seconds (63% response). The default is 3 seconds.

Span Setting Function (*2):

Span flows can be set in units such as volume flow rate, mass flow rate, time, or flow rate value. The velocity unit can also be set.

Volume Flow Rate Unit: kcf, cf, mcf, Mgal (US), kgal (US), gal (US), mgal (US), kbbl (US)*, bbl (US)*, mbbl (US)*, µbbl (US)*, Ml (megaliter), m^3, kl (kiloliter), l (liter), cm^3

Mass Flow Rate Unit (Density must be set.): klb (US), lb (US), t (ton), kg, g

Velocity Unit: ft, m (meter)

Time Unit: s (sec), min, h (hour), d (day)

* “US Oil” or “US Beer” can be selected.

Pulse Output (*1)(*2):

Scaled pulse can be output by setting a pulse weight.

Pulse Width: Duty 50% or fixed pulse width (0.05, 0.1, 0.5, 1, 20, 33, 50, 100 ms) can be selected.

Output Rate: 0.0001 to 10,000 pps (pulse/second)

Multi-range Function (*1)(*2):

- Range switching via status input
  Status input enables the switching of up to two ranges.
- Automatic range switching
  When the flow rate exceeds 100 % of the range, transition to the next range (up to four ranges) is carried out automatically. Range switching can be confirmed by status outputs and indicator.

Forward and Reverse Flow Measurement Functions (*1)(*2):

Flows in both forward and reverse directions can be measured. The reverse flow measurement can be confirmed by status output and indicator.

Totalization Switch (*1)(*2):

The status output is carried out when output if a totalized value becomes equal to or greater than the set value.

Preset Totalization (*1)(*2):

The parameter setting or status input enables a totalized value to be preset to a setting value or zero.

0% Signal Lock (*1)(*2):

Status input forcibly fixes the instantaneous flow rate display, current output, pulse output, and flow rate totalization to 0%.

Alarm Selection Function (*2):

Alarms are classified into System Alarms (hard failures), Process Alarms (such as ‘Empty Pipe’, ‘Signal Overflow’ and ‘Adhesion Alarm’), Setting Alarms, and Warnings. Whether alarms should be generated or not can be selected for each item.

The current output generated for an alarm can be selected from among 2.4 mA or less, fixed to 4 mA, 21.6 mA or more, or HOLD.

Alarm Output (*1)(*2):

Alarms are generated only for the items selected via the ‘Alarm Selection Function’ if relevant failures occur.

Self Diagnostics Functions (*2):

If alarms are generated, details of the System Alarms, Process Alarms, Setting Alarms and Warnings are displayed together with concrete descriptions of countermeasures.

Flow Upper/Lower Limit Alarms (*1)(*2):

If a flow rate becomes greater or smaller than the set value, this alarm is generated. In addition, two upper limits (H, HH) and two lower limits (L, LL) can be set.

If a flow rate becomes greater or smaller than any of the set values, the status is output.

Electrode Adhesion Diagnostics Function (*1) (*2):

This function enables monitoring of the adhesion level of insulating substances to the electrodes. Depending on the status of adhesion, users are notified by a warning or an alarm via status outputs. If replaceable electrodes are used, they can be removed and cleaned when adhesion occurs.

All Rights Reserved. Copyright © 2003, Yokogawa Electric Corporation

■ HAZARDOUS AREA CLASSIFICATION

ATEX:

Applicable Standard:
EN 60079-0: 2012/A11:2013,
EN 60079-1: 2007, 2014,
EN 60079-31: 2014
Certificate: DEKRA 15ATEX0029 X

Type of Gas Atmosphere Protection

Group: II
Category: 2G
Type of Protection:
Ex db IIC T6 Gb
Specification of Protection:
Power Supply: 100 to 240 Vac 47 to 63 Hz
100 to 120 Vdc 24 Vac/dc
Current Output: 4 to 20 mA
Digital Output: on; 1.6 Vdc, 200 mA max
off; 30 Vdc max, 0 mA
Digital communication: 9 to 32 Vdc 15 mA
Enclosure: IP66/IP67
Ambient Temp.: -40°C to +60°C (-40°F to +140°F)

Type of Dust Atmosphere Protection

Group: II
Category: 2D
Type of Protection:
Ex tb IIIC T75°C Db
Specification of Protection:
Power Supply:100 to 240 Vac 47 to 63 Hz
100 to 120 Vdc 24 Vac/dc
Current Output: 4 to 20 mA
Digital Output: on; 1.6 Vdc, 200 mA max
off; 30 Vdc max, 0 mA
Digital communication: 9 to 32 Vdc 15 mA
Enclosure: IP66/IP67
Ambient Temp.: -40°C to +60°C (-40°F to +140°F)

FM:

Applicable Standard:
FM3600, FM3615, FM3810, ANSI/NEMA 250
Explosion proof for Class I, Division 1, Groups A, B, C & D.
Dust-ignition proof for Class II/III, Division 1, Groups E, F & G.
“SEAL ALL CONDUITS WITHIN 18 INCHES”
“WHEN INSTALLED IN DIV. 2, SEALS NOT REQUIRED”

Maximum power supply voltage: 250 Vac/130 Vdc
Excitation Circuit: 140V max
Enclosure: NEMA 4X
Temperature Code: T6
Ambient Temp.: –40°C to +60°C (–40°F to +140°F)
Note: Installation shall be in accordance with the manufacturer’s instructions and National Electric Code, ANSI/NFPA-70, and Local Electric Code.

CSA:

Applicable Standard:
For CSA C22.2 Series;
C22.2 No 0, C22.2 No 0.4, C22.2 No 0.5,
C22.2 No 25, C22.2 No 30, C22.2 No 94,
C22.2 No.61010-1-12,
C22.2 No.61010-2-030-12
For CSA E79 Series;
CAN/CSA-E79-0, CAN/CSA-E79-1,
Certificate: 1481213

For CSA C22.2 Series

Explosion proof for Class I, Division 1, Groups A, B, C & D.
Dust-ignition proof for Class II/III, Division 1, Groups E, F & G.
“SEAL ALL CONDUITS WITHIN 50 cm OF THE ENCLOSURE”
“WHEN INSTALLED IN DIV. 2, SEALS NOT REQUIRED”

Maximum power supply voltage: 250 Vac/130 Vdc
Excitation Circuit: 140V max
Enclosure: Type 4X
Temperature Code: T6
Ambient Temp.: –40°C to +60°C (–40°F to +140°F)

For CSA E79 Series

Flameproof for Zone 1, Ex d IIC T6

Maximum power supply voltage: 250 Vac/130 Vdc
Excitation Circuit: 140V max
Enclosure: IP66, IP67
Temperature Code: T6
Ambient Temp.: –40°C to +60°C (–40°F to +140°F)

IECEx:

Applicable Standard:
IEC 60079-0: 2011,
IEC 60079-1: 2007, 2014,
IEC 60079-31: 2013
Certificate: IECEx DEK 15.0022 X

Type of Gas Atmosphere Protection

Type of Protection:
Ex db IIC T6 Gb
Specification of Protection:
Power Supply: 100 to 240 Vac 47 to 63 Hz
100 to 120 Vdc 24 Vac/dc
Current Output: 4 to 20 mA
Digital Output: on; 1.6 Vdc, 200 mA max
off; 30 Vdc max, 0 mA
Digital communication: 9 to 32 Vdc 15 mA
Enclosure: IP66/IP67
Ambient Temp.: -40°C to +60°C (-40°F to +140°F)

Type of Dust Atmosphere Protection

Type of Protection:
Ex tb IIIC T75°C Db
Specification of Protection:
Power Supply: 100 to 240 Vac 47 to 63 Hz
100 to 120 Vdc 24 Vac/dc
Current Output: 4 to 20 mA
Digital Output: on; 1.6 Vdc, 200 mA max
off; 30 Vdc max, 0 mA
Digital communication: 9 to 32 Vdc 15 mA
Enclosure: IP66/IP67
Ambient Temp.: -40°C to +60°C (-40°F to +140°F)

All Rights Reserved. Copyright © 2003, Yokogawa Electric Corporation

TIIS:

- Certificate: TC16678
- Construction: Ex d IIC T6
  : Explosion proof
- Gas Group and Temperature Class: IIC T6
- Ambient Temperature: –20°C to 60°C
  (power supply code 1)
  : –20°C to 50°C
  (power supply code 2)
- Maximum power supply voltage: 250V AC/130V DC
- Grounding: JIS Class C (grounding resistance 10Ω or less) or JIS Class A (grounding resistance 10Ω or less)

*In case that ambient temperature exceeds 50°C, use heat-resistant cables with maximum allowable temperature of 70°C or above.

■ STANDARD PERFORMANCE

Accuracy (Combined with AXF Remote Flowtube)

Note: The accuracy of a product before shipment is defined as totalized value at the result of calibration test in our water actual flow test facility.
Calibrated conditions in our water actual test facility are as follows:

Fluid temperature; 20 ± 10°C
Ambient temperature; 20 ± 5°C
Length of straight runs; 10 D or more on the upstream side; 5 D or more on the downstream side
Reference conditions; Similar to BS EN29104 (1993); ISO 9104 (1991)

Pulse Output:

PFA/Ceramics Lining:

Size mm (in.)	Flow Velocity *V* m/s (ft/s)	Standard Accuracy(*) (Calibration code B)	Flow Velocity *V* m/s (ft/s)	High grade Accuracy (Calibration code C)
2.5 (0.1) to 15 (0.5)	*V* < 0.3 (1)	±1.0 mm/s	—	
	0.3 ≦ *V* ≦ 10 (1) (33)	±0.35% of Rate		
25 (1.0) to 200 (8.0)	*V* < 0.15 (0.5)	±0.5 mm/s	*V* <0.15 (0.5)	±0.5 mm/s
	0.15 ≦ *V* ≦ 10 (0.5) (33)	±0.35% of Rate	0.15 ≦ *V* <1 (0.5) (3.3)	±0.18% of Rate ±0.2mm/s
			1 ≦ *V* ≦10 (3.3) (33)	±0.2% of Rate
250 (10) to 400 (16)	*V* < 0.15 (0.5)	±0.5 mm/s	—	
	0.15 ≦ *V* ≦ 10 (0.5) (33)	±0.35% of Rate		

T01.EPS

*: For enhanced dual frequency excitation (Option code HF2) add ±1 mm/s to the standard accuracy.

Size 2.5 mm (0.1 in.) to 15 mm (0.5 in.)

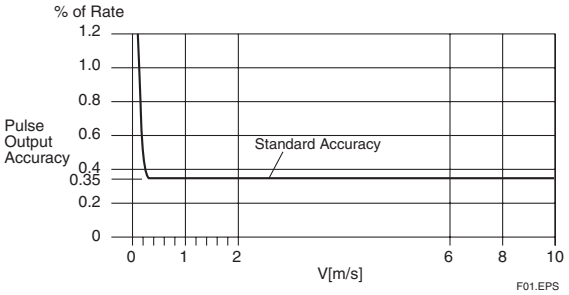

Size 25 mm (1.0 in.) to 400 mm (16 in.)

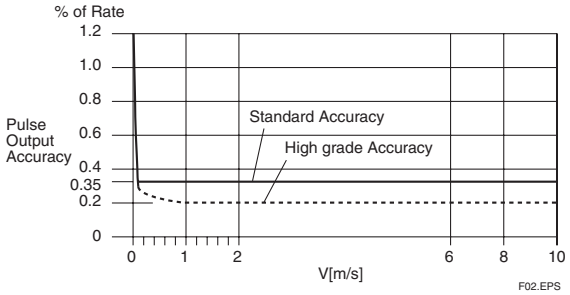

Polyurethane Rubber/Natural Soft Rubber/EPDM Rubber Lining

Size mm (in.)	Flow Velocity *V* m/s (ft/s)	Standard Accuracy(*) (Calibration code B)
25 (1.0) to 400 (16)	*V* < 0.3 (1.0)	±1.0 mm/s
	0.3 ≦ *V* ≦ 10 (1.0) (33)	±0.35% of Rate

T02.EPS

*: For enhanced dual frequency excitation (Option code HF2) add ±1 mm/s to the standard accuracy.

Size 25 mm (1.0 in.) to 400 mm (16 in.)

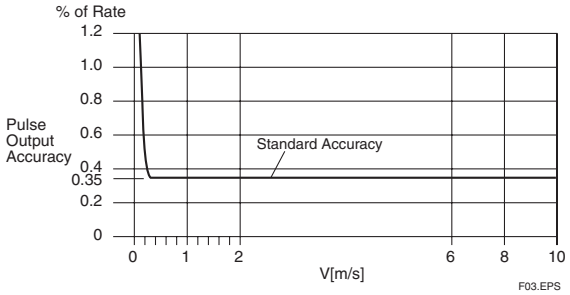

Current Output "◇": Pulse output accuracy plus ±0.05% of Span

Repeatability:
±0.1% of Rate (V ≧ 1 m/s (3.3 ft/s))
±0.05% of Rate ±0.5 mm/s (V < 1 m/s (3.3 ft/s))

Maximum Power Consumption:
Combined with AXF Remote Flowtube: 12 W
Note: The power consumption is the same as above regardless of the communication type.

Insulation Resistance(*1) :
Between power supply terminals and ground terminal: 100MΩ at 500V DC
Between power supply terminals and input/output/ excitation current terminals : 100MΩ at 500V DC
Between ground terminal and input/output/excitation current terminals: 20MΩ at 100V DC
Between input/output/excitation current terminals: 20MΩ at 100V DC

Withstand Voltage(*1) :
Between power supply terminals and ground terminal: 1400V AC for 2 seconds
Between power supply terminals and input/output terminals: 1400V AC for 2 seconds
Between excitation current terminal and ground terminal: 160V AC for 2 seconds
Between excitation current terminal and input /output terminals: 350V AC for 2 seconds

All Rights Reserved. Copyright © 2003, Yokogawa Electric Corporation

⚠ CAUTION

*1: When performing the Insulation Resistance Test or the Withstand Voltage Test, please obey the following caution.
- Following the relevant test, wait for more than 10 minutes after the power supply has been turned off before removing the cover.
- Remove all wires from terminals before testing.
- When the power terminal has a lightning protector (optional code A), remove the short bar at the ground terminal.
- After testing, be sure to discharge by using a resistance and return all wires and the short bar to its correct position.
- Screws must be tightened to a torque of 1.18 N-m or more.
- After closing the cover, the power supply can be restored.

Safety Requirement Standards:
EN61010-1
EN61010-2-030
- Altitude at installation site: Max. 2000 m above sea level
- Installation category based on IEC1010:
  Overvoltage category II (“II” applies to electrical equipment which is supplied from a fixed installation-like distribution board.)
- Pollution degree based on IEC1010
  Pollution degree 2 (“Pollution degree” describes the degree to which a solid, liquid, or gas which deteriorates dielectric strength or surface resistivity is adhering. “2” applies to a normal indoor atmosphere.)

EMC Conformity Standards:
EN61326-1 Class A, Table 2 (For use in industrial locations)
EN61326-2-3
EN61326-2-5 (for FOUNDATION fieldbus/PROFIBUS only)
EN61000-3-2 Class A
EN61000-3-3

■ NORMAL OPERATING CONDITIONS

Ambient Temperature: –40°C to +60°C (–40°F to +140°F)
- Indicator’s operating range: –20°C to +60°C (–4°F to +140°F)
- Maximum temperature should be 50°C in the case of power supply code 2.

Ambient Humidity: 0 to 100%
Lengthy continuous operation at 95% or more is not recommended.

Power Supply

Power supply code 1:
- AC specifications
  Rated power supply: 100 to 240 V AC, 50/60 Hz
  (Operating voltage range: 80 to 264 V AC)
- DC specifications
  Rated power supply: 100 to 120 V DC
  (Operating voltage range: 90 to 130 V DC)

Power supply code 2:
- AC specifications
  Rated power supply: 24 V AC, 50/60 Hz
  (Operating voltage range: 20.4 to 28.8 V AC)
- DC specifications
  Rated power supply: 24 V DC
  (Operating voltage range: 20.4 to 28.8 V DC)

Supply Voltage and Cable Length for Power Supply Code 2

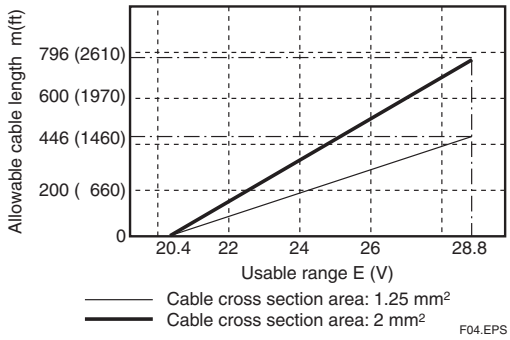

Vibration Conditions:
Level of vibration in conformity with IEC 60068-2-6 (SAMA31. 1-1980)
9.8 m/s² or less (frequency of 500 Hz or less)
Note: Avoid locations with much vibration (with a vibration frequency of 500 Hz or more), which may cause damage to the equipment.

■ ACCESSORIES

Mounting bracket: 1 set
Hexagonal wrench: 1 pc.

All Rights Reserved. Copyright © 2003, Yokogawa Electric Corporation

■ MODEL AND SUFFIX CODE

AXFA14 Magnetic Flowmeter Remote Converter:

Model	Suffix Code	Description
AXFA14		Magnetic Flowmeter Remote Converter
Use (*2)	G · · · · · · · · · · · · · · ·	General-Purpose Use For AXF Remote Flowtube of Size 2.5 to 400 mm (0.1 in. to 16 in.)
	C · · · · · · · · · · · · · · ·	Explosion proof Type For Remote Flowtube of Size 2.5 to 400 mm (0.1 in. to 16 in.)
Output Signal and Communication	-D · · · · · · · · · · · · ·	4 to 20 mA DC, BRAIN Communication
	-E · · · · · · · · · · · · ·	4 to 20 mA DC, HART Communication
	-F · · · · · · · · · · · · ·	Digital communication (FOUNDATION fieldbus protocol)(*5)
	-G · · · · · · · · · · · · ·	Digital communication (PROFIBUS PA protocol)(*6)
Power Supply	1 · · · · · · · · · ·	100 V to 240 V AC or 100 to 120 V DC
	2 · · · · · · · · · ·	24 V AC/DC
Electrical Connections (*3)	-0 · · · · · · ·	JIS G1/2 female
	-2 · · · · · · ·	ANSI 1/2 NPT female
	-4 · · · · · · ·	ISO M20 × 1.5 female
Indicator (*1)(*4)	1 · · · · ·	With Indicator (Horizontal)
	2 · · · · ·	With Indicator (Vertical)
	N · · · · ·	None
Option	/□	Optional code (See the Table of Optional Specifications)

T03.EPS

*1: 1 2 N

*2: For explosion proof types, specify type of explosion proof certification using the optional codes. For the TIIS flameproof type with wiring using a flameproof packing adapter, select optional code G14 or G13. Available only for JIS G1/2 female electrical connections.
*3: JIS G1/2 female electrical connection is available only for TIIS flameproof type.
*4: In case of the TIIS flameproof type, select "with indicator"(code 1 or 2).
*5: For FOUNDATION fieldbus protocol, refer to GS 01E20F02-01E.
*6: For PROFIBUS PA protocol, refer to GS 01E20F12-01E.

Signal Cable:

Model	Suffix Code	Description
AXFC	· · · · · · · · · · · · ·	Magnetic Flowmeter Dedicated Signal cable for the ADMAG AXF series
Termination	-0 · · · · · · · · · · ·	No Termination.
	-4 · · · · · · · · · · ·	A set of termination parts for M4 screws is attached. Terminated for the AXFA11 or AXFA14 Remote Converter.
Cable Length	-L□□□ · · · · ·	Designate the cable length, unit: m Following "L", specify the cable in three digits as multiple of 1 meter (e.g., 001, 002, or 005) for a length up to 5 m, or as a multiple of 5 meters (i.e., 005, 010, 015, or the like). The maximum cable length: 200 m for combined use with AXFA11 100 m for combined use with AXFA14
Option	/C□	With termination parts sets. Following "C", specify the q'ty of sets of termination parts in one digits.

T04.EPS

Note:
- The cable is constructed with double shielding over the two conductors, and uses heat-resistant vinyl as the outer covering material.
  Finished diameture: 10.5 mm (0.41 in.)
  Maximum temperature: +80˚C (+175˚F)
- Unnecessary to order the above cable for submersible type flowtube or for the optional code DHC flowtube because the flowtube is wired with 30 m (98 ft) cable.
- For excitation cable, prepare a two-core cable at the customer side.

Recommended Excitation, Power and Output Cable:

JIS C3401 control cable equivalent
JIS C3312 power cable equivalent
14 AWG Belden 8720 equivalent
Outer Diameter:
With no gland option;
6.5 to 12 mm (0.26 to 0.47 in.)
With gland options EG,EU;
10.5 or 11.5 mm (0.41 or 0.45 in.)
With gland options EP;
6 to 12 mm (0.24 to 0.47 in.)
Nominal Cross Section:
Single wire: 0.5 to 2.5 mm^2
Stranded wire: 0.5 to 1.5 mm^2

● Terminal Configuration "◇"

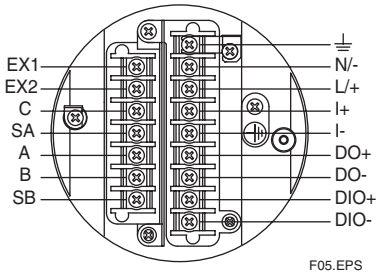

F05.EPS

● Terminal Wiring

Terminal Symbols	Description
EX1 EX2	Excitation current Output
C SA A B SB	Flow singal input

Terminal Symbols	Description
⏚	Functional grounding
N/– L/+	Power supply
I+ I–	Current output 4 to 20mA DC
DO+ DO–	Pulse output/ Alarm output/ Status output
DIO+ DIO–	Alarm output/ Status output/ Status input
⏚	Protective grounding (Outside of the terminal)

T05.EPS

All Rights Reserved. Copyright © 2003, Yokogawa Electric Corporation

■ OPTIONAL SPECIFICATIONS FOR AXFA14 REMOTE CONVERTER "◇"

○: Available –: Not available

Item	Specification		Applicable Model: General-Purpose use (D E F G AXF***G-E)	Applicable Model: Explosion proof Type (D E F G AXF***C-E)	Code
Lightning Protector	A lightning protector is built into the power terminals.		○	○	A
DC Noise Cut Circuit	The DC Noise Cut Circuit is built in. Available for 15 mm (0.5 in.) and larger sizes, and for fluids with the conductivity of 50 µS/cm or higher. Nullifies the empty check and electrode adhesion diagnostic function.		○	○	ELC
Burn Out Down	The output level is set to 0 mA during a CPU failure and is set 2.4 mA (-10%) or less during an alarm. Standard products are delivered with a setting 25 mA during a CPU failure and 21.6 mA (110%) or more during an alarm.		○ (*2)	○ (*2)	C1
NAMUR NE43 Compliance	Output signal limits: 3.8 to 20.5 mA	Failure alarm down-scale: The output level is set to 0 mA during a CPU failure and is set 2.4 mA (–10%) or less during an alarm.	○ (*2)	○ (*2)	C2
		Failure alarm up-scale. The output level is set to 25 mA during a CPU failure and is set 21.6 mA (110%) or more during an alarm.	○ (*2)	○ (*2)	C3
Active Pulse Output	Active pulses are output in order to drive an external electromagnetic or electronic counter directly using the converter's internal power supply. (Nullfies the standard transistor contact pulse output.) Output voltage: 24 V DC ±20% Pulse specifications: • The drive current of 150 mA or less • Pulse rate: 0.0001 to 2 pps (pulse/second); Pulse width: 20, 33, 50, or 100 ms		○ (*2)	○ (*2)	EM
Waterproof Glands	Waterproof glands are attached to the electrical connections. Available only for JIS G1/2 female electric connections.		○	–	EG
Waterproof Glands with Union Joints	Waterproof glands with union joints are attached to the electrical connections. Available only for JIS G1/2 female electric connections.		○	–	EU
Plastic Glands	Plastic glands are attached to the electrical connections. Available only for JIS G1/2 female electric connections.		○	–	EP
Stainless Steel Mounting Bracket	Provided with a JIS SUS304 (AISI 304 SS/EN 1.4301 equivalent) stainless steel mounting bracket in lieu of the standard carbon steel bracket.		○	○	SB
Stainless Steel Tag Plate	Screwed JIS SUS304 (AISI 304 SS/EN 1.4301 equivalent) stainless steel tag plate. Choose this option when an SS tag plate is required in addition to the standard nameplate with the tag number inscribed on it. Dimension (Height × Width): Appr. 12.5 (4.92) × 40 (15.7) mm (inch)		○	○	SCT
Painting Color Change	Coated in black (Munsell N1.5 or its equivalent.)		○	○	P1
	Coated in jade green (Munsell 7.5BG4/1.5 or its equivalent.)		○	○	P2
	Coated in metallic silver.		○	○	P7
Epoxy Resin Coating	Epoxy resin coating which has alkali-resistance instead of standard polyurethane resin coating. The color is same as standard type.		○	○	X1
High Anti-corrosion Coating	Three-layer coating (polyurethane coating on two-layer epoxy resin coating) in the same range as that for the standard coating. The color is same as standard type. Salt/alkali/acid/weather-resistance.		○	○	X2
Calibration Certificate	Level 2: The Declaration and the Calibration Equipment List are issued.		○	○	L2
	Level 3: The Declaration and the Primary Standard List are issued.		○	○	L3
	Level 4: The Declaration and the Yokogawa Measuring Instruments Control System are issued.		○	○	L4
ATEX Certification	ATEX Explosion proof See "HAZARDOUS AREA CLASSIFICATION"		–	○	KF21
FM Approval	FM Explosion proof See "HAZARDOUS AREA CLASSIFICATION"		–	○	FF1
CSA Certification	CSA Explosion proof See "HAZARDOUS AREA CLASSIFICATION"		–	○	CF1
IECEx Certification	IECEx Explosion proof See "HAZARDOUS AREA CLASSIFICATION"		–	○	SF21
TIIS Certification (*1)	TIIS Flameproof See "HAZARDOUS AREA CLASSIFICATION"		–	○	JF3

T06.EPS

All Rights Reserved. Copyright © 2003, Yokogawa Electric Corporation

Item	Specification	Applicable Model		Code
		General-Purpose use	Explosion proof Type	
		AXF***G-D E F G	AXF***C-D E F G	
Flameproof packing adapter for TIIS Flameproof Type	Four flameproof packing adapters	–	○	G14
	Three flameproof packing adapters and one blind plug. Available only when a four-wires cable is used for power input and signal output with DC power supply.	–	○ (*2)	G13

*1: Select optional code G14 or G13 when TIIS Flameproof type with wiring using a flameproof packing adapter. Available only for JIS G1/2 female electric concections.
*2: In the case of fieldbus communication type, optional codes C1, C2, C3, EM and G13 are unable to select.

T06_02.EPS

All Rights Reserved. Copyright © 2003, Yokogawa Electric Corporation

■ EXTERNAL DIMENSIONS

● Remote Converter AXFA14G, AXFA14C

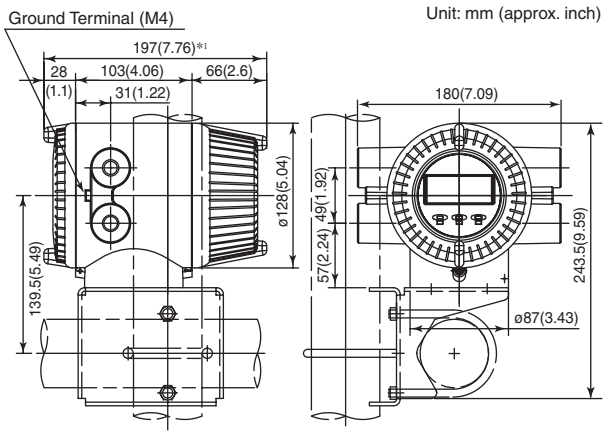

*No infra-red switches are furnished for fieldbus communication type.

Weight: 2.8kg (6.2lb)

*1: When indicator code N is selected, subtract 12 mm (0.47 inch) from the value in the figure.
In case of explosion proof type with indicator, add 5 mm (0.2 inch) to it.

F06.EPS

● Dedicated Signal Cable

AXFC-4-L□□□

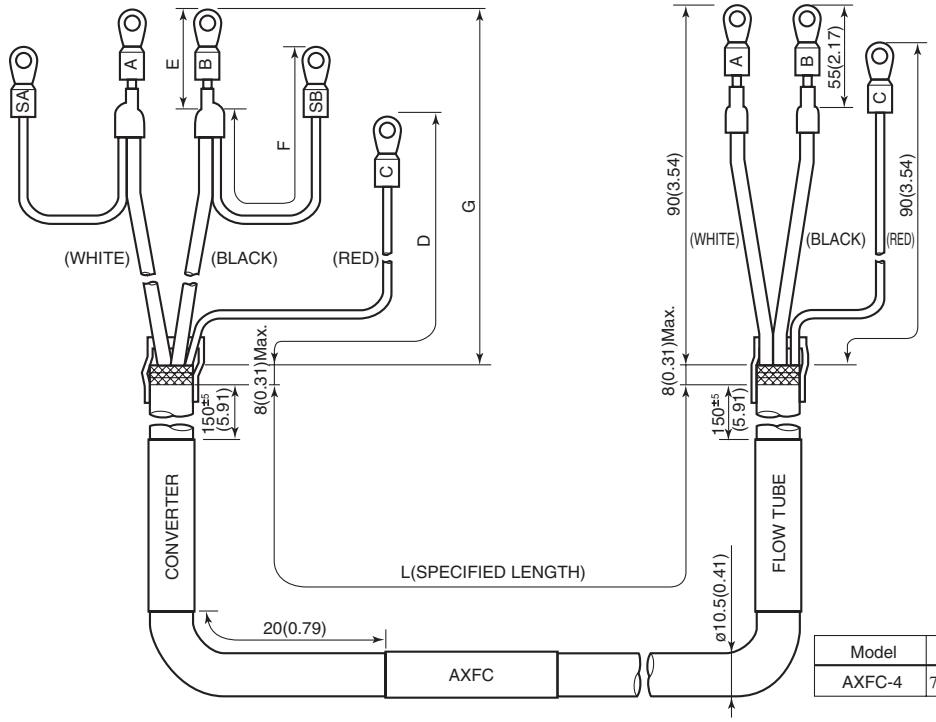

Model	D	E	F	G
AXFC-4	70(2.76)	25(0.98)	50(1.97)	60(2.36)

F07.EPS

AXFC-0-L□□□

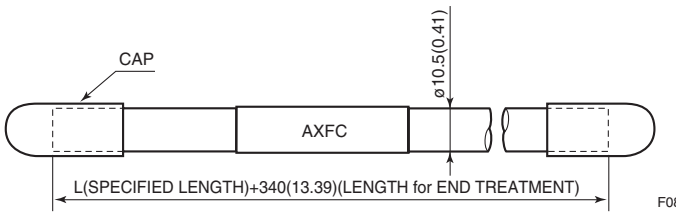

F08.EPS

All Rights Reserved. Copyright © 2003, Yokogawa Electric Corporation

● Flameproof packing adapter for TIIS Flameproof type (optional code G14 or G13)

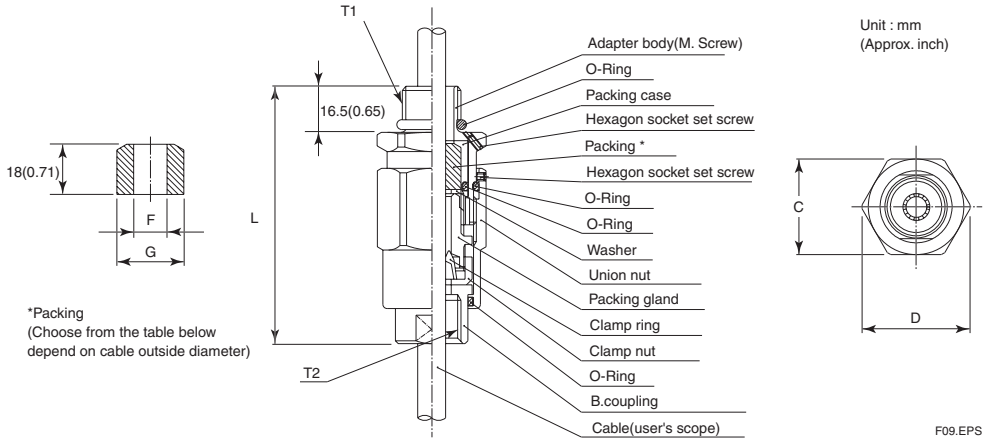

Nominal diameter		Dimension			Cable outer diameter	Packing diameter		Identification mark	Weight kg (lb)	Parts No.
T1	T2	C	D	L		F	G			
G 1/2	G 1/2	35 (1.38)	39 (1.54)	94.5 (3.72)	ø8.0 to ø10.0 (0.31 to 0.39)	ø10.0(0.39)	ø20.0 (0.79)	16 8-10	0.26 (0.57)	G9601AM*
					ø10.0 to ø12.0 (0.39 to 0.47)	ø12.0(0.47)		16 10-12		

*: G 13: 3 units
G 14: 4 units
T07.EPS

● Unless otherwise specified, difference in the dimensions are refer to the following table.

General tolerance in the dimensional outline drawing.

Unit : mm (approx.inch)

Category of basic dimension		Tolerance	Category of basic dimension		Tolerance
Above	Equal or below		Above	Equal or below	
	3 (0.12)	±0.7 (±0.03)	500 (19.69)	630 (24.80)	±5.5 (±0.22)
3 (0.12)	6 (0.24)	±0.9 (±0.04)	630 (24.80)	800 (31.50)	±6.25 (±0.25)
6 (0.24)	10 (0.39)	±1.1 (±0.04)	800 (31.50)	1000 (39.37)	±7.0 (±0.28)
10 (0.39)	18 (0.71)	±1.35 (±0.05)	1000 (39.37)	1250 (49.21)	±8.25 (±0.32)
18 (0.71)	30 (1.18)	±1.65 (±0.06)	1250 (49.21)	1600 (62.99)	±9.75 (±0.38)
30 (1.18)	50 (1.97)	±1.95 (±0.08)	1600 (62.99)	2000 (78.74)	±11.5 (±0.45)
50 (1.97)	80 (3.15)	±2.3 (±0.09)	2000 (78.74)	2500 (98.43)	±14.0 (±0.55)
80 (3.15)	120 (4.72)	±2.7 (±0.11)	2500 (98.43)	3150 (124.02)	±16.5 (±0.65)
120 (4.72)	180 (7.09)	±3.15 (±0.12)			
180 (7.09)	250 (9.84)	±3.6 (±0.14)			
250 (9.84)	315 (12.40)	±4.05 (±0.16)			
315 (12.40)	400 (15.75)	±4.45 (±0.18)			
400 (15.75)	500 (19.69)	±4.85 (±0.19)			

Remarks: The numeric is based on criteria of tolerance class IT18 in JIS B 0401.

T08.EPS

All Rights Reserved. Copyright © 2003, Yokogawa Electric Corporation

ORDERING INFORMATION "◇"

Note 1: When ordering in combination a remote flowtube and a remote converter, specify the span flow rate, unit, pulse weight, and totalizer display pulse weight can be specified.
These parameters will then be set in the combined converter before shipment.
When ordering of a converter alone, these parameters cannot specify.
Please refer to GS01E20D01-01E "ORDERING INFORMATION".

Note 2: Some options, if ordered, require the relevant specifications to be input when ordering.

1. Model, specification and option codes.
2. Tag number

   Each tag number can be specified in up to 16 characters in a combination of letters (capital or small letters), numbers, "-" and ".".
   For HART protocol, up to 8 characters can be specified.
   If specified, the tag number is inscribed on the product's name plate and tag plate (if optional code SCT is selected). The tag number is also set into the memory of converter.
   If the user wishes to change only the tag number to be set into a converter's memory, specify the software tag.
   If a tag number is not specified, the tag number is set as a blank.

RELATED INSTRUMENTS

Calibrator for Magnetic Flowmeter (AM012): GS 1E6K2-E

BT200 Brain Terminal: GS 01C00A11-00EN

AXF Magnetic Flowmeter Integral Flowmeter/ Remote Flowtube: GS 01E20D01-01E

AXFA11G Magnetic Flowmeter Remote Converter: GS 01E20C01-01E

AXF FOUNDATION Fieldbus Communication Type Magnetic Flowmeter: GS 01E20F02-01E

AXF PROFIBUS PA Communication Type Magnetic Flowmeter: GS 01E20F12-01E

FieldMate: GS 01R01A01-01E

REFERENCE

ADMAG, AXF, ADMAG AXF are registered trademarks of Yokogawa Electric Corporation.

Company names and product names used in this material are registered trademarks or trademarks of their respective owners.

All Rights Reserved. Copyright © 2003, Yokogawa Electric Corporation
Subject to change without notice.