User's Manual

FA-M3 VITESSE™

YHLS Slave Units
TAH Series

IM 34M06H46-03E

vigilantplant.®

Applicable Modules:

Model Code	Model Name
TAHWD32-3PAM	16-input, 16-output unit (positive common input, sink-type output)
TAHWD32-3NBM	16-input, 16-output unit (negative common input, source-type output)
TAHXD16-3PEM	16-input unit (positive common input)
TAHXD16-3NEM	16-input unit (negative common input)
TAHYD16-3EAM	16-output unit (sink-type output)
TAHYD16-3EBM	16-output unit (source-type output)

YOKOGAWA
Yokogawa Electric Corporation

IM 34M06H46-03E
2nd Edition

Blank Page

Applicable Product

- **FA-M3 YHLS Slave Units TAH Series**

  - Model : TAHWD32-3PAM, TAHWD32-3NBM, TAHXD16-3PEM, TAHXD16-3NEM, TAHYD16-3EAM, TAHYD16-3EBM
  - Name : YHLS Slave Units TAH Series

The document number for this manual is given below.

Refer to the document number in all communications, including when purchasing additional copies of this manual.

- Document No.: IM 34M06H46-03E

Media No. IM 34M06H24-06E (CD) 1st Edition :April. 2008 (AR)
All Rights Reserved Copyright © 2008, Yokogawa Electric Corporation

Important

■ About This Manual

- This Manual should be passed on to the end user.
- Before using the controller, read this manual thoroughly to have a clear understanding of the controller.
- This manual explains the functions of this product, but there is no guarantee that they will suit the particular purpose of the user.
- Under absolutely no circumstances may the contents of this manual be transcribed or copied, in part or in whole, without permission.
- The contents of this manual are subject to change without prior notice.
- Every effort has been made to ensure accuracy in the preparation of this manual. However, should any errors or omissions come to the attention of the user, please contact the nearest Yokogawa Electric representative or sales office.

■ Safety Symbols

- **Danger.** This symbol on the product indicates that the operator must follow the instructions laid out in this user's manual to avoid the risk of personnel injuries, fatalities, or damage to the instrument. Where indicated by this symbol, the manual describes what special care the operator must exercise to prevent electrical shock or other dangers that may result in injury or the loss of life.

- **Protective Conductor Terminal**

  This terminal is to prevent electric shock. Before using the instrument, connect to the Protective earth (Comply with the regulation of each country.), and route the line through the shortest path possible.

- **Functional Earth Terminal**

  This terminal is for stable operation. Before using the instrument, be sure to ground this terminal.

- **Alternating current.** Indicates alternating current.

- **Direct current.** Indicates direct current.

The following symbols are used only in the user's manual.

WARNING

- Indicates a “Warning”.

  Draws attention to information essential to prevent hardware damage, software damage or system failure.

CAUTION

- Indicates a “Caution”

  Draws attention to information essential to the understanding of operation and functions.

TIP

- Indicates a “TIP”

  Gives information that complements the present topic.

SEE ALSO

- Indicates a “SEE ALSO” reference.

  Identifies a source to which to refer.

■ Safety Precautions when Using/Maintaining the Product

- For the protection and safe use of the product and the system controlled by it, be sure to follow the instructions and precautions on safety stated in this manual whenever handling the product. Take special note that if you handle the product in a manner other than prescribed in these instructions, the protection feature of the product may be damaged or impaired. In such cases, Yokogawa cannot guarantee the quality, performance, function and safety of the product.
- When installing protection and/or safety circuits such as lightning protection devices and equipment for the product and control system as well as designing or installing separate protection and/or safety circuits for fool-proof design and fail-safe design of processes and lines using the product and the system controlled by it, the user should implement it using devices and equipment, additional to this product.
- If component parts or consumable are to be replaced, be sure to use parts specified by the company.
- This product is not designed or manufactured to be used in critical applications which directly affect or threaten human lives and safety — such as nuclear power equipment, devices using radioactivity, railway facilities, aviation equipment, shipboard equipment, aviation facilities or medical equipment. If so used, it is the user’s responsibility to include in the system additional equipment and devices that ensure personnel safety.
- Do not attempt to modify the product.
- To avoid electrical shock, turn off the power before wiring.
- This product is classified as Class A for use in industrial environments. If used in a residential environment, it may cause electromagnetic interference (EMI).

  In such situations, it is the user's responsibility to adopt the necessary measures against EMI.

■ Exemption from Responsibility

- Yokogawa Electric Corporation (hereinafter simply referred to as Yokogawa Electric) makes no warranties regarding the product except those stated in the WARRANTY that is provided separately.
- Yokogawa Electric assumes no liability to any party for any loss or damage, direct or indirect, caused by the use or any unpredictable defect of the product.

■ Software Supplied by the Company

- Yokogawa Electric makes no other warranties expressed or implied except as provided in its warranty clause for software supplied by the company.
- Use the software with one computer only. You must purchase another copy of the software for use with each additional computer.
- Copying the software for any purposes other than backup is strictly prohibited.
- Store the original media that contain the software in a safe place.
- Reverse engineering, such as decompiling of the software, is strictly prohibited.
- Under absolutely no circumstances may the software supplied by Yokogawa Electric be transferred, exchanged, or sublet or leased, in part or as a whole, for use by any third party without prior permission by Yokogawa Electric.

■ General Requirements for Using the FA-M3 / e-RT3 Controller

● Set the product in a location that fulfills the following requirements:

- INDOOR USE ONLY
- This product is an open equipment. The product must be installed in a metallic panel enclosure with an impact rating IK08 or more.
- Where the product will not be exposed to direct sunlight, and where the operating surrounding air temperature is from 0°C to 55°C (32°F to 131°F).

  There are modules that must be used in an environment where the operating surrounding air temperature is in a range smaller than 0°C to 55°C (32°F to 131°F). Refer to “Hardware Manual” (IM 34M06C11-01E) or the applicable user's manual. In case of attaching such a module, the entire system's operating surrounding air temperature is limited to the module's individual operating surrounding air temperature.
- Where the relative humidity is from 10 to 90%.

  In places where there is a chance of condensation, use a space heater or the like to constantly keep the product warm and prevent condensation.
- For use in Pollution Degree 2 Environment.
- Where there are no corrosive or flammable gases.
- Where the product will not be exposed to mechanical vibration or shock that exceed specifications.
- Where there is no chance the product may be exposed to radioactivity.

● Use the correct types of wire for external wiring:

- USE COPPER CONDUCTORS ONLY.
- Use conductors with temperature rating above 75°C.

● Securely tighten screws:

- Securely tighten module mounting screws and terminal screws to avoid problems such as faulty operation.
- Tighten terminal block screws with the correct tightening torque as given in this manual. Refer to the “Hardware Manual” (IM 34M06C11-01E) or the applicable user's manual for the appropriate tightening torque.

● Securely lock connecting cables:

- Securely lock the connectors of cables, and check them thoroughly before turning on the power.

● Interlock with emergency-stop circuitry using external relays:

- Equipment incorporating the FA-M3 / e-RT3 controller must be furnished with emergency-stop circuitry that uses external relays. This circuitry should be set up to interlock correctly with controller status (stop/run).

● Ground for low impedance:

- For safety reasons, connect the [FG] grounding terminal to a protective earth (Comply with the regulation of each country.). For compliance to CE Marking, use braided or other wires that can ensure low impedance even at high frequencies for grounding.

- **Configure and route cables with noise control considerations:**
  - Perform installation and wiring that segregates system parts that may likely become noise sources and system parts that are susceptible to noise. Segregation can be achieved by measures such as segregating by distance, installing a filter or segregating the grounding system.

- **Configure for CE Marking Conformance:**
  - For compliance to CE Marking, perform installation and cable routing according to the description on compliance to CE Marking in the “Hardware Manual” (IM 34M06C11-01E).
  - The list of CE conforming models is available in Appendix A2. of “Hardware Manual”.

- **Keep spare parts on hand:**
  - We recommend that you stock up on maintenance parts, including spare modules, in advance.
  - Preventive maintenance (replacement of the module) is required for using the module beyond 10 years.

- **Discharge static electricity before touching the system:**
  - Because static charge can accumulate in dry conditions, first touch grounded metal to discharge any static electricity before touching the system.

- **Wipe off dirt with a soft cloth:**
  - Gently wipe off dirt on the product's surfaces with a soft cloth.
  - If you soak the cloth in water or a neutral detergent, tightly wring it out before wiping the product. Letting water enter the module interior can cause malfunctions.
  - Do not use volatile solvents such as benzine or paint thinner or chemicals for cleaning, as they may cause deformity, discoloration, or malfunctioning.

- **Avoid storing the FA-M3 /e-RT3 controller in places with high temperature or humidity:**
  - Since the CPU module has a built-in battery, avoid storage in places with high temperature or humidity.
  - Since the service life of the battery is drastically reduced by exposure to high temperatures, take special care (storage surrounding air temperature should be from -20°C to 75°C).
  - There is a built-in lithium battery in a Sequence CPU module which serves as backup power supply for programs, device information and configuration information.

    The service life of this battery is more than 10 years in standby mode at room temperature. Take note that the service life of the battery may be shortened when installed or stored at locations of extreme low or high temperatures. Therefore, we recommend that modules with built-in batteries be stored at room temperature.

- **Always turn off the power before installing or removing modules:**
  - Failing to turn off the power supply when installing or removing modules, may result in damage.

- **Do not touch components in the module:**
  - In some modules you can remove the right-side cover and install ROM packs or change switch settings. While doing this, do not touch any components on the printed-circuit board, otherwise components may be damaged and modules may fail to work.

- **Do not use unused terminals:**
  - Do not connect wires to unused terminals on a terminal block or in a connector. Doing so may adversely affect the functions of the module.
- **Use the following power source:**
  - Use only F3PU□□-□□ as the power supply module.
  - If using this product as a UL-approved product, for the external power supply, use a limited voltage / current circuit power source or a Class 2 power source/
  - If using this product as a CE-complied product, for the external power supply, use a SELV and limited-energy circuit separated by reinforced insulation or double insulation from hazardous voltage.
- **Refer to the user's manual before connecting wires:**
  - Refer to the “Hardware Manual” (IM 34M06C11-01E) or the applicable user’s manual for the external wiring drawing.
  - Refer to “A3.6.5 Connecting Output Devices” in the “Hardware Manual” before connecting the wiring for the output signal.
  - Refer to “A3.5.4 Grounding Procedure” in the “Hardware Manual” for attaching the grounding wiring.
- **Authorized Representative:**
  - The Authorized Representative for this product in the EEA is:

    Yokogawa Europe B. V.

    Euroweg 2, 3825 HD Amersfoort, The Netherlands

■ General Requirements for Using the FA-M3 Slave Units (TAH Series)

● Connect YHLS cable to SHIELD terminal:

- Connect the DRAIN line of the YHLS cable to the SHIELD terminal of the YHLS master module securely. Failing to do so may affect the performance of the YHLS system.

● Do not touch components in the unit:

- Do not remove the back cover of the unit. Doing so may cause a failure.

■ How to dispose the batteries

This is an explanation about the new EU Battery Directive. This directive is only valid in the EU.

Batteries are included in some modules of this product. The procedure is different when the user can remove or cannot remove.

①Batteries the user can remove

The battery of F3RP6☐ can be removed by yourself.
When you remove the battery from F3RP6☐ and dispose it, discard them in accordance with domestic law concerning disposal. See the User's Manual of F3RP6☐ for the removal procedure. Take a right action on waste batteries, because the collection system in the EU on waste batteries are regulated. If you don't remove the battery from this product, please see ②.

②Batteries the user cannot remove

Dispose the battery together with this product.
When you dispose this product in the EU, contact your local Yokogawa Europe B.V.office.
Do not dispose them as domestic household waste.

Battery category: Lithium battery

Note: With reference to Annex II of the new EU Battery Directive, the above symbol indicates obligatory separate collection.

Introduction

■ Overview of the Manual

This manual describes FA-M3 YHLS slave units (TAH Series).

■ Other User's Manuals

The manual(s) to be read depends on the CPU module to be used. You should read the latest versions of the following manuals, as required.

F3SP71
F3SP76

- **For Functions:**
  - Sequence CPU Instruction Manual – Functions (for F3SP71-4N/4S, F3SP76-7N/7S) (IM34M06P15-01E)
  - Sequence CPU – Network Functions (for F3SP71-4N/4S, F3SP76-7N/7S) (IM34M06P15-02E)
- **For ladder programming:**
  - FA-M3 Programming Tool WideField3 (IM34M06Q16-01E, -02E, -03E, -04E)

F3SP66
F3SP67

- **For Functions:**
  - Sequence CPU – Functions (for F3SP66-4S, F3SP67-6S) (IM34M06P14-01E)
  - Sequence CPU – Network Functions (for F3SP66-4S, F3SP67-6S) (IM34M06P14-02E)
- **For ladder programming:**
  - FA-M3 Programming Tool WideField3 (IM34M06Q16-01E, -02E, -03E, -04E)

F3SP22
F3SP28
F3SP38

F3SP53
F3SP58
F3SP59

- **For Functions:**
  - Sequence CPU – Functions (for F3SP22-0S, F3SP28-3N/3S, F3SP38-6N/6S, F3SP53-4H/4S, F3SP58-6H/6S, F3SP59-7S) (IM34M06P13-01E)
- **For ladder programming:**
  - FA-M3 Programming Tool WideField2 (IM34M06Q15-01E)
  - FA-M3 Programming Tool WideField3 (IM34M06Q16-01E, -02E, -03E, -04E)

F3BP20
F3BP30

- **For Functions:**
  - BASIC CPU Modules and YM-BASIC/FA Programming Language (IM34M06Q22-01E)
- **For BASIC programming:**
  - BASIC Programming Tool M3 for Windows (IM 34M06Q22-02E)
- **Common for all sequence CPU modules**

  For the FA-M3 specifications and configurations*1, installation and wiring, test run, maintenance, and module installation limits for the whole system:

  *1: Refer to the relevant product manuals for specifications except for power supply modules, base modules, input/output modules, cables and terminal units.

  - Hardware Manual (IM 34M06C11-01E)

Copyrights and Trademarks

■ Copyrights

The copyright of the programs and online manuals contained in the software medium of the Software Product shall remain in YOKOGAWA.

You are allowed to print the required pages of the online manuals for the purposes of using or operating the Product; however, reprinting or reproducing the entire document is strictly prohibited by the Copyright Law.

Except as stated above, no part of the online manuals may be reproduced, transferred, sold, or distributed to a third party in any manner (either in electronic or written form including, without limitation, in the forms of paper documents, electronic media, and transmission via the network). Nor it may be registered or recorded in the media such as films without permission.

■ Trademarks

The trade names and company names referred to in this manual are either trademarks or registered trademarks of their respective companies.

YHLS Slave Units
TAH Series

IM 34M06H46-03E 2nd Edition

CONTENTS

Applicable Product i

Important ii

Introduction viii

Copyrights and Trademarks ix

1. Overview 1-1

1.1 What is YHLS? 1-1

1.2 What are YHLS Slave Units? 1-1

1.3 Features of YHLS 1-2

1.3.1 Communication between YHLS Master Module and Slave Units 1-2

1.3.2 Constant Communication Cycle Time 1-2

1.3.3 Output Control Function 1-2

1.3.4 Daisy-chain Connection 1-2

1.3.5 Transmission Line Quality Indicators 1-2

1.3.6 Over Current Protector for I/O Power Supply 1-2

1.4 System Configuration 1-3

2. Specifications 2-1

■ **Model and Suffix Codes** 2-1

■ **Common Specifications** 2-1

■ **Performance Specifications** 2-2

■ **Components and Functions** 2-7

■ **External Dimensions Drawing** 2-8

3. YHLS Communications 3-1

3.1 Assigning Addresses to Slave Units 3-1

3.2 Maximum Transmission Distance 3-2

3.3 Maximum Number of YHLS Slave Units 3-3

4. Components 4-1

4.1 Appearance 4-1

4.2 Components (Detailed Description) 4-2

4.2.1 Pin Assignment 4-2

4.2.2 Connectors for External Connection 4-4

4.2.3 LED Indicators 4-4

4.2.4 Switches 4-5

4.2.5 Components for Mounting the Module 4-5

5. Setup 5-1
5.1 Slave Unit Address Setup 5-1
5.1.1 Setup Procedure 5-1
5.2 Transmission Speed Setup 5-3
5.3 Communications Mode Setup 5-3
5.4 Output Control Function Setup 5-4
5.5 LED Display Setup 5-5
5.6 Terminating Resistor Switch Setup 5-6
6. YHLS Communications Data Areas 6-1
6.1 Input Data Area 6-1
6.2 Output Data Area 6-2
7. Installation 7-1
7.1 Installation Sites 7-1
7.2 Orientation, Separation and Ambient Temperature Requirements for Cluster Mounting 7-1
7.3 Attaching to and Detaching from DIN Rail 7-4
7.4 Mounting Dimensions 7-6
7.5 Mounting Depth 7-7
7.6 Cabling Precautions 7-8
8. External Connections 8-1
8.1 YHLS Communications Line 8-1
8.2 Power Supply Line 8-2
8.3 I/O Circuits 8-3
9. Troubleshooting 9-1
9.1 Troubleshooting Using LEDs (RDY, LNK, ALM and OCP) 9-1
9.2 Troubleshooting Using LEDs (for communication with I/O devices). 9-3
10. Sample Program 10-1
10.1 Accessing through YHLS Master Module 10-1
11. YHLS Communication Cables 11-1
■ Model and Suffix Codes 11-1
■ Cable Specifications 11-1
Appendices: Connectors and Cable Preparation 1
Appendix 1. Connectors 1
Appendix 2. Cable Preparation 2
Index Index-1
Revision Information i

1. Overview

1.1 What is YHLS?

Yokogawa High-speed Link System (YHLS) is designed for implementing high-speed remote I/O in an FA-M3 system.

A YHLS system consists of an FA-M3 master module (F3LH0□-1N) connected to multiple distributed slave units through a communication cable to allow high-speed control of remote I/O units from a sequence CPU. It has the following merits:

- High-speed scan of 63 slave units in just 0.96 ms.
- Reduced wiring through use of distributed devices within a system
- Simple mechanism for high-speed exchange of ON/OFF signals and numerical data with remote devices
- Adoption of the HLS open network allows flexibility in building customized application systems by connecting HLS-compliant I/O units from different vendors.

1.2 What are YHLS Slave Units?

YHLS slave units are connected to a YHLS master module to implement high-speed remote I/O. Up to 63 YHLS slave units can be connected to each port of a YHLS master module for controlling up to 2016 inputs and outputs (1008 inputs and 1008 outputs) per port.

The YHLS slave units described in this manual come in different types having different number of inputs and outputs: 16 inputs/16 outputs, 16 inputs, and 16 outputs. Each unit must be supplied with external power supply so that it can provide non-isolated power supply to its external loads (see “List of YHLS Slave Units” below).

The digital I/O interface employs MIL-type connectors, which are readily available in the market.

● List of YHLS Slave Units

Model	Communications Mode	Transmission Speed	I/O Specifications		No. of I/Os		I/O Connector
			IN	OUT	IN	OUT	
TAHWD32-3PAM	Full-duplex or half-duplex	12 Mbps, 6 Mbps or 3 Mbps	+ common	Sink	16	16	MIL
TAHWD32-3NBM			– common	Source	16	16	MIL
TAHXD16-3PEM			+ common	-	16	-	MIL
TAHXD16-3NEM			– common	-	16	-	MIL
TAHYD16-3EAM			-	Sink	-	16	MIL
TAHYD16-3EBM			-	Source	-	16	MIL

1.3 Features of YHLS

1.3.1 Communication between YHLS Master Module and Slave Units

Through periodic communications with connected slave units, the YHLS master module acquires ON/OFF information of switches connected to these slave units into its input data area, as well as outputs information stored in its output data area as ON/OFF information for actuators. By accessing the I/O data areas of the YHLS master module using READ and WRITE instructions, the sequence CPU module can thus exchange information with field equipment.

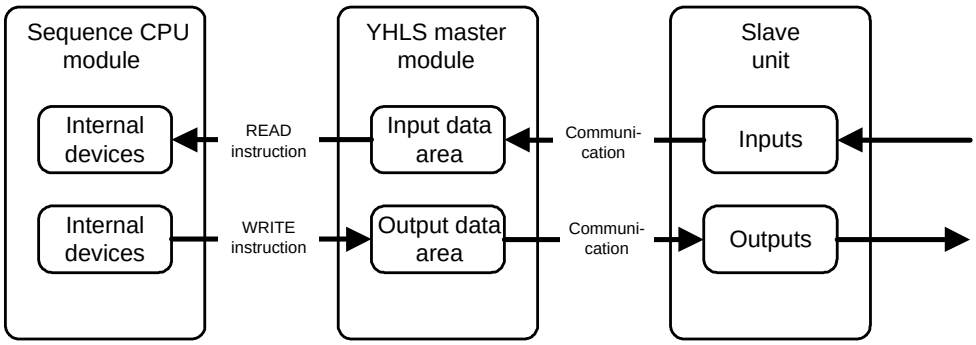

1.3.2 Constant Communication Cycle Time

YHLS features a constant communication cycle time, not affected by automatic participation or withdrawal of slave units, thus delivering reliable communications with constant cycle time under all circumstances.

1.3.3 Output Control Function

Each slave unit can be configured using a DIP switch to either reset or hold its outputs upon the occurrence of any of the following events:

- Sequence CPU module is switched to STOP state.
- Communication request relay (Y□□□33, Y□□□41) is turned OFF.
- A program is downloaded.
- OCP (Over Current Protection) is activated.
- Communication cable is broken or disconnected.

1.3.4 Daisy-chain Connection

As YHLS adopts a daisy-chain connection within each communication connector, a slave unit that is powered off or down does not affect normal communication with the other slaves.

1.3.5 Transmission Line Quality Indicators

Each YHLS unit has LNK and ALM LED indicators, which show the transmission line quality.

1.3.6 Over Current Protector for I/O Power Supply

If a load is shorted, resulting in a large short-circuit current within a YHLS slave unit, the over-current protector circuit automatically kicks in to cut off the I/O power supply so as to protect the internal circuitry and the destination circuitry. Power supply is automatically restored when the cause of the short circuit is removed.

When the over-current protector circuit is activated, the OCP LED is lit and the abnormal slave unit is withdrawn from communication. A program can detect errors by checking the ALIVE list of the master module.

1.4 System Configuration

Up to 126 YHLS slave units can be connected to one YHLS master module (F3LH0□-1N). More remote I/O systems can be constructed by installing multiple YHLS master modules.

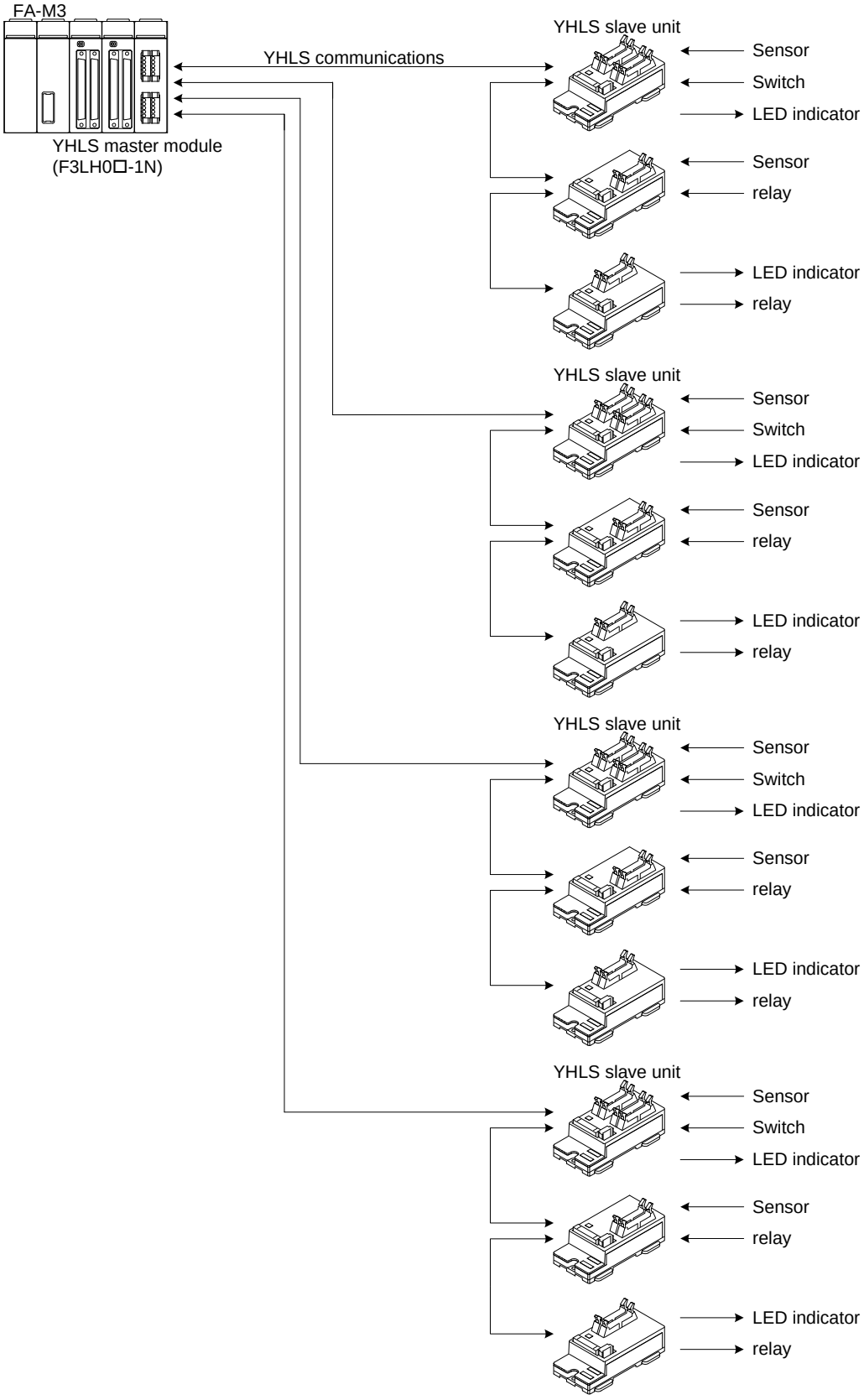

Blank Page

2. Specifications

■ Model and Suffix Codes

Model *	Suffix Code	Style Code	Option Code	Description
TAHWD32	-3PAM	…	…	16 DC inputs (positive common), 24 V DC, MIL 16 TR outputs (sink-type, with short-circuit protection), 24 V DC 0.1 A, MIL
TAHWD32	-3NBM	…	…	16 DC inputs (negative common), 24 V DC, MIL 16 TR outputs (source-type, with short-circuit protection), 24 V DC 0.1 A, MIL
TAHXD16	-3PEM	…	…	16 DC inputs (positive common), 24 V DC, MIL
TAHXD16	-3NEM	…	…	16 DC inputs (negative common), 24 V DC, MIL
TAHYD16	-3EAM	…	…	16 TR outputs (sink-type, with short-circuit protection), 24 V DC 0.1 A, MIL
TAHYD16	-3EBM	…	…	16 TR outputs (source-type, with short-circuit protection), 24 V DC 0.1 A, MIL

* All models are supplied with (spring-type) communication connectors.

■ Common Specifications

Item	Specifications
Operating ambient temperature	0 to 55°C
Operating ambient humidity	10 to 90% RH (non-condensing)
Operating ambient atmosphere	Must be free of corrosive gases, flammable gases and heavy dust
Storage ambient temperature	-20 to 70°C
Storage ambient humidity	10 to 90% RH (non-condensing)
Cooling method	Natural air-cooling
Mounting*1	Direct mounting with M4-size setscrews or DIN-rail mounting
Structure	Designed for mounting inside a panel enclosure
Altitude of installation	2000 m max. above sea level
Mounting direction	X, Y and Z directions. For details, see Section 7.2, “Orientation, Separation and Ambient Temperature Requirements for Cluster Mounting."
Vibration resistance*2	Tested in compliance with JIS C0040 under the following conditions: - Frequency ranges: 10 to 57 Hz with an amplitude of 0.075 mm 57 to 150 Hz with an acceleration of 9.8 m/s2 (1 G) - Direction and sweep cycles: 10 times each in the X, Y, and Z directions
Shock resistance*2	Tested in compliance with JIS C0041 under the following conditions: - Direction and sweep cycles: 3 times each in the X, Y, and Z directions with an acceleration of 147 m/s2
External dimensions	See “External Dimensions.”
Insulation resistance	1 MΩ min. when tested between the power supply circuit and the communication terminals using a 500 VDC insulation resistance tester
Withstanding voltage	500 V AC for one minute between the power supply circuit and communication terminals.

*1: Compatible DIN rails are TH35-7.5Al and TH35-7.5Fe (JIS C 2812-compliant).
*2: When mounting on a DIN rail, secure the unit using metal stoppers to prevent it from moving.

■ Performance Specifications

■ I/O Units

Item			TAHWD32-3PAM	TAHWD32-3NBM
Power supply block, etc.	Power supply voltage [*1] (P24Vin)		24 VDC	24 VDC
	Power supply voltage range		20.4 to 26.4 VDC	20.4 to 26.4 VDC
	Current consumption		P24Vin: 3.3 A (max.) P24Vout: 3.2 A (max.) Internal circuitry: 0.1 A (max.)	P24Vin: 3.3 A (max.) P24Vout: 1.6 A (max.) Internal circuitry: 0.1 A (max.)
	Short-circuit protector for I/O power supply [*2]		Short-circuit protection threshold current across P24Vout-N24Vout: 3.9 A to 5.5 A 4.4±0.2 A (reference values at 25°C)	Short-circuit protection threshold current across P24Vout-N24Vout: 2.0 A to 2.7 A 2.2±0.2 A (reference values at 25°C)
	Weight		145 g	145 g
Input block	Input type		DC voltage (positive common)	DC voltage (negative common)
	Number of points		16	16
	Common line type		16 points/common	16 points/common
	Isolation method		Photocoupler isolation	Photocoupler isolation
	Rated input voltage		24 VDC	24 VDC
	Operating voltage range		20.4 to 26.4 VDC	20.4 to 26.4 VDC
	Rated input current		4.1 mA/point (24V DC)	4.1 mA/point (24V DC)
	I/O power supply [*3] (P24Vout)	Voltage	P24Vin - 0.5V	P24Vin - 0.5V
		Current	0.1 A/point, 1.6 A/common	0.1 A/point, 1.6 A/common [*4]
	Maximum ratio of inputs turned on simultaneously		75% (0 to 55°C) 100% (0 to 40°C)	75% (0 to 55°C) 100% (0 to 40°C)
	Input impedance		5.9 kΩ	5.9 kΩ
	Operating voltage /current	ON	16.0 VDC min., 3.2 mA min.	16.0 VDC min., 3.2 mA min.
		OFF	5.8 VDC max., 0.9 mA max.	5.8 VDC max., 0.9 mA max.
	Response time	OFF→ON	1.0 ms max.	1.0 ms max.
		ON→OFF	1.0 ms max.	1.0 ms max.
	Interrupt		None	None
	Input connector		Two 26-pin MIL-type connectors	Two 26-pin MIL-type connectors
	Input display [*5]		LED (Lit when input is turned on)	LED (Lit when input is turned on)
Output block	Output type		Transistor contact (sink-type)	Transistor contact (source type)
	Protectors	Short-circuit protector	Limits short-circuit current when error is detected.	Limits short-circuit current when error is detected.
		Overheat protector	Shuts off output when error is detected.	Shuts off output when error is detected.
	Surge protector [*6]		Active clamp	Active clamp
	Number of points		16	16
	Common line type		16 points/common	16 points/common
	Isolation method		Photocoupler isolation	Photocoupler isolation
	Rated load voltage		24 VDC	24 VDC
	I/O power supply [*3] (P24Vout)	Voltage	P24Vin - 0.5 V [*6]	P24Vin - 0.5V [*6]
		Current	0.1A/point, 1.6A/common	– [*4]
	Maximum load current		0.1A/point, total 1.2 A (0 to 55°C) 0.1A/point, total 1.6 A (0 to 40°C)	0.1A/point, total 1.2 A (0 to 55°C) 0.1A/point, total 1.6 A (0 to 40°C)
	Response time	OFF→ON	1 ms max.	1 ms max.
		ON→OFF	1 ms max.	1 ms max.
	ON voltage		0.5 VDC max.	0.5 VDC max.
	Off-time leak current		0.1 mA max.	0.1 mA max.
	Output connector		Two 26-pin MIL-type connectors	Two 26-pin MIL-type connectors
	Output status at YHLS communications failure or when program stops		Configurable globally on per unit basis using a DIP switch HLD:HOLD, R: RESET (Shutdown)	Configurable globally on per unit basis using a DIP switch HLD:HOLD, R: RESET (Shutdown)
	Output display [*5]		LED (lit when output is turned on)	LED (lit when output is turned on)
Communications block	Communications mode		4-wire full-duplex, 2-wire half-duplex	
	Transmission speed		3 Mbps, 6 Mbps or 12 Mbps	
	Synchronization		Bit synchronization	
	Error detection		CRC-12	
	Maximum total transmission distance		300 m (at 3Mbps), 200 m (at 6 Mbps) or 100 m (at 12 Mbps)	
	Number of connected units		63 units max. per port (32 units per connector)	
	Connection method		Daisy-chain connection	
	Impedance		100 Ω	
	Terminating resistor		Internal resistor can be enabled or disabled using a switch	
	Communication connector		European-type terminal block	
	Number of slave addresses required		1	

*1: Use a dedicated power supply for the TAH series with an internal noise filter. A ferrite core should be fitted on the power cable.
*2: The current threshold value for activating the short-circuit protector varies with the ambient temperature. The threshold value is larger at higher temperatures and smaller at lower temperatures.
*3: The external power supply to the P24Vin pin is passed through a diode and a short-circuit detection circuit before its output at the I/O power supply (P24Vout) pin. This causes a voltage drop of about 0.5 V.
*4: For TAHWD32-3NBM, the I/O power supply for the input block and the I/O power supply for the output block add up to 1.6 A. If the I/O current supply exceeds the range of 2.0 to 2.7 A, the short-circuit protector will be activated.
*5: The contact operation of the output block of the circuit and the LED indicators operate independently and thus may be inconsistent in the event of an error.
*6: If an inductive load, such as a relay, is to be connected, a surge protector is also required on the load side. Connect a surge protector or a diode across the load nearby so that the unit's output terminal voltage will not exceed the specified operating load voltage range.

■ Input Units

Item			TAHXD16-3PEM	TAHXD16-3NEM
Power supply block, etc.	Power supply voltage [*1] (P24Vin)		24 VDC	24 VDC
	Power supply voltage range		20.4 to 26.4 VDC	20.4 to 26.4 VDC
	Current consumption		P24Vin: 1.7 A (max.) P24Vout: 1.6 A (max.) Internal circuitry: 0.1 A (max.)	P24Vin: 1.7 A (max.) P24Vout: 1.6 A (max.) Internal circuitry: 0.1 A (max.)
	Short-circuit protector for I/O power supply [*2]		Short-circuit protection threshold current across P24Vout-N24Vout: 2.0 A to 2.7 A 2.2±0.2 A (reference values at 25°C)	Short-circuit protection threshold current across P24Vout-N24Vout: 2.0 A to 2.7 A 2.2±0.2 A (reference values at 25°C)
	Weight		130 g	130 g
Input block	Input type		DC voltage (positive common)	DC voltage (negative common)
	Number of points		16	16
	Common line type		16 points/common	16 points/common
	Isolation method		Photocoupler isolation	Photocoupler isolation
	Rated input voltage		24 VDC	24 VDC
	Operating voltage range		20.4 to 26.4 VDC	20.4 to 26.4 VDC
	Rated input current		4.1 mA/point (24V DC)	4.1 mA/point (24V DC)
	I/O power supply [*3] (P24Vout)	Voltage	P24Vin - 0.5V	P24Vin - 0.5V
		Current	0.1 A/point, 1.6 A/common	0.1 A/point, 1.6 A/common [*4]
	Maximum ratio of inputs turned on simultaneously		100%	100%
	Input impedance		5.9 kΩ	5.9 kΩ
	Operating voltage /current	ON	16.0 VDC min. 3.2 mA min.	16.0 VDC min. 3.2 mA min.
		OFF	5.8 VDC max. 0.9 mA max.	5.8 VDC max. 0.9 mA max.
	Response time	OFF→ON	1.0 ms max.	1.0 ms max.
		ON→OFF	1.0 ms max.	1.0 ms max.
	Interrupt		None	None
	Input connector		Two 26-pin MIL-type connectors	Two 26-pin MIL-type connectors
	Input display [*4]		LED (Lit when input is turned on)	LED (Lit when input is turned on)
Communications block	Communications mode		4-wire full-duplex, 2-wire half-duplex	
	Transmission speed		3 Mbps, 6 Mbps or 12 Mbps	
	Synchronization		Bit synchronization	
	Error detection		CRC-12	
	Maximum total transmission distance		300 m (at 3Mbps), 200 m (at 6 Mbps) or 100 m (at 12 Mbps)	
	Number of connected units		63 units max. per port (32 units per connector)	
	Connection method		Daisy-chain connection	
	Impedance		100 Ω	
	Terminating resistor		Internal resistor can be enabled or disabled using a switch	
	Communication connector		European-type terminal block	
	Number of slave addresses required		1	

*1: Use a dedicated power supply for the TAH series with an internal noise filter. A ferrite core should be fitted on the power cable.
*2: The current threshold value for activating the short-circuit protector varies with the ambient temperature. The threshold value is larger at higher temperatures and smaller at lower temperatures.
*3: The external power supply to the P24Vin pin is passed through a diode and a short-circuit detection circuit before its output at the I/O power supply (P24Vout) pin. This causes a voltage drop of about 0.5 V.
*4 The contact operation of the output block of the circuit and the LED indicators operate independently and thus may be inconsistent in the event of an error.

■ Output Units

Item			TAHYD16-3EAM	TAHYD16-3EBM
Power supply block, etc.	Power supply voltage *1 (P24Vin)		24 VDC	24 VDC
	Power supply voltage range		20.4 to 26.4 VDC	20.4 to 26.4 VDC
	Current consumption		P24Vin: 1.7 A (max.) P24Vout: 1.6 A (max.) Internal circuitry: 0.1 A (max.)	P24Vin: 1.7 A (max.) P24Vout: 1.6 A (max.) Internal circuitry: 0.1 A (max.)
	Short-circuit protector for I/O power supply *2		Short-circuit protection threshold current across P24Vout-N24Vout: 2.0 A to 2.7 A 2.2±0.2 A (reference values at 25°C)	Short-circuit protection threshold current across P24Vout-N24Vout: 2.0 A to 2.7 A 2.2±0.2 A (reference values at 25°C)
	Weight		130 g	130 g
Output block	Output type		Transistor contact (sink-type)	Transistor contact (source type)
	Protectors	Short-circuit protector	Limits short-circuit current when error is detected.	Limits short-circuit current when error is detected.
		Overheat protector	Shuts off output when error is detected.	Shuts off output when error is detected.
	Surge protector *5		Active clamp	Active clamp
	Number of points		16	16
	Common line type		16 points/common	16 points/common
	Isolation method		Photocoupler isolation	Photocoupler isolation
	Rated load voltage		24 VDC	24 VDC
	I/O power supply *3 (P24Vout)	Voltage	P24Vin - 0.5 V	P24Vin - 0.5 V
		Current	0.1A/point, 1.6A/common	0.1A/point, 1.6A/common *6
	Maximum load current		0.1A/point, total 1.6 A	0.1A/point, total 1.6 A *6
	Response time	OFF→ON	1 ms max.	1 ms max.
		ON→OFF	1 ms max.	1 ms max.
	ON voltage		0.5 VDC max.	0.5 VDC max.
	Off-time leak current		0.1 mA max.	0.1 mA max.
	Output connector		Two 26-pin MIL-type connectors	Two 26-pin MIL-type connectors
	Output status at YHLS communications failure or when program stops		Configurable globally on per unit basis using a DIP switch HLD:HOLD, R: RESET (Shutdown)	Configurable globally on per unit basis using a DIP switch HLD:HOLD, R: RESET (Shutdown)
	Output display *4		LED (lit when output is turned on)	LED (lit when output is turned on)
Communications block	Communications mode		4-wire full-duplex, 2-wire half-duplex	
	Transmission speed		3 Mbps, 6 Mbps or 12 Mbps	
	Synchronization		Bit synchronization	
	Error detection		CRC-12	
	Maximum total transmission distance		300 m (at 3Mbps), 200 m (at 6 Mbps) or 100 m (at 12 Mbps)	
	Number of connected units		63 units max. per port (32 units per connector)	
	Connection method		Daisy-chain connection	
	Impedance		100 Ω	
	Terminating resistor		Internal resistor can be enabled or disabled using a switch	
	Communication connector		European-type terminal block	
	Number of slave addresses required		1	

*1: Use a dedicated power supply for the TAH series with an internal noise filter. A ferrite core should be fitted on the power cable.
*2: The current threshold value for activating the short-circuit protector varies with the ambient temperature. The threshold value is larger at higher temperatures and smaller at lower temperatures.
*3: The external power supply to the P24Vin pin is passed through a diode and a short-circuit detection circuit before its output at the I/O power supply (P24Vout) pin. This causes a voltage drop of about 0.5 V.
*4: The contact operation of the output block of the circuit and the LED indicators operate independently and thus may be inconsistent in the event of an error.
*5: If an inductive load, such as a relay, is to be connected, a surge protector is also required on the load side. Connect a surge protector or a diode across the load nearby so that the unit's output terminal voltage will not exceed the specified operating load voltage range.
*6: The maximum load current is 1.6 A including the I/O current supply.

WARNING

Never connect a DC power supply exceeding the power supply voltage range or an AC power supply to the power supply connector (P24Vin, N24Vin pins). Doing so may damage the internal circuitry or result in accidents and injuries.

CAUTION

The I/O power supply (P24Vout, N24Vout) terminals are output terminals for supplying current to connected I/O instruments. Never connect these terminals to an external power supply. Doing so may damage the internal circuitry.

The short-circuit protector for the I/O power supply (P24Vout) and the output protectors operate independently (the former may not be activated even if the latter is activated).

Operation of the short-circuit protector for the I/O power supply (P24Vout)

- If a short-circuit occurs or if the current flowing through P24Vout exceeds the short-circuit current threshold, the short-circuit protector is activated to cut off current flow to the P24Vout terminal.
- When the short-circuit protector is activated, the OCP (Over Current Protection) LED is lit and the slave unit is withdrawn from communications. (If this occurs during communications, the LNK LED goes off and the ALM LED is lit).
- When a slave unit is withdrawn from communications, its contact outputs are either shutdown (turned off) or held depending on whether its DIP switch is set to HOLD or RESET. You should implement measures outside the PLC to ensure safe system operation even under such situations.
- Once the short-circuit condition is removed, current supply to the P24Vout is resumed, and at the same time, the OCP goes off and communications is restored to normal. (LNK LED is lit, while ALM LED goes off)
- You can check internal registers (Alive Slave List) of the master module to determine which slaves are participating in or withdrawn from YHLS communication.

Operation of the output protectors

- If a short-circuit occurs, the ON voltage increases and the short-circuit current is limited within the range 1-3 A.
- Once the short-circuit condition disappears, output behavior is restored to normal.
- If the short-circuit condition continues, the temperature of the output element increases due to the short-circuit current. If the temperature reaches approx. 160°C, the overheat protector will be activated and will shut down the output.
- If the temperature drops by approx. 10°C after the overheat protector had been activated, the output is restored.
- The overheat protector is not activated as long as there is no short-circuit condition and the unit is operated normally within its specifications.
- For sink-type outputs, the short-circuit and overheat protectors protect outputs individually. For source-type outputs, however, the short-circuit protector protects outputs individually but the overheat protector protects outputs in pairs (OUT1 and OUT2; OUT3 and OUT4; OUT5 and OUT6; OUT7 and OUT8; OUT9 and OUT10; OUT11 and OUT12; OUT13 and OUT14; OUT15 and OUT16). If any output of a pair is overheated, both outputs are shut down. Under some short-circuit conditions, the overheat protector may shut down not only the associated output but also other outputs.
- Both the short-circuit protector and overheat protector are designed to protect the output elements of the module against short-term short-circuit conditions. Never leave the module in prolonged short-circuit condition. Otherwise, the module enclosure may deteriorate or the PCB may be discolored.

24 V DC power supply
- Use a dedicated 24V DC power supply for the TAH series. Avoid sharing power with other equipment.
- The power supply should incorporate an internal noise filter.
- A ferrite core should be fitted on the power cable.

CAUTION

- If using this product as a UL-approved product, for the external power supply, use a limited voltage / current circuit power source or a Class 2 power source.
- If using this product as a CE-complied product, for the external power supply, use a SELV and limited-energy circuit separated by reinforced insulation or double insulation from hazardous voltage.-

■ Components and Functions

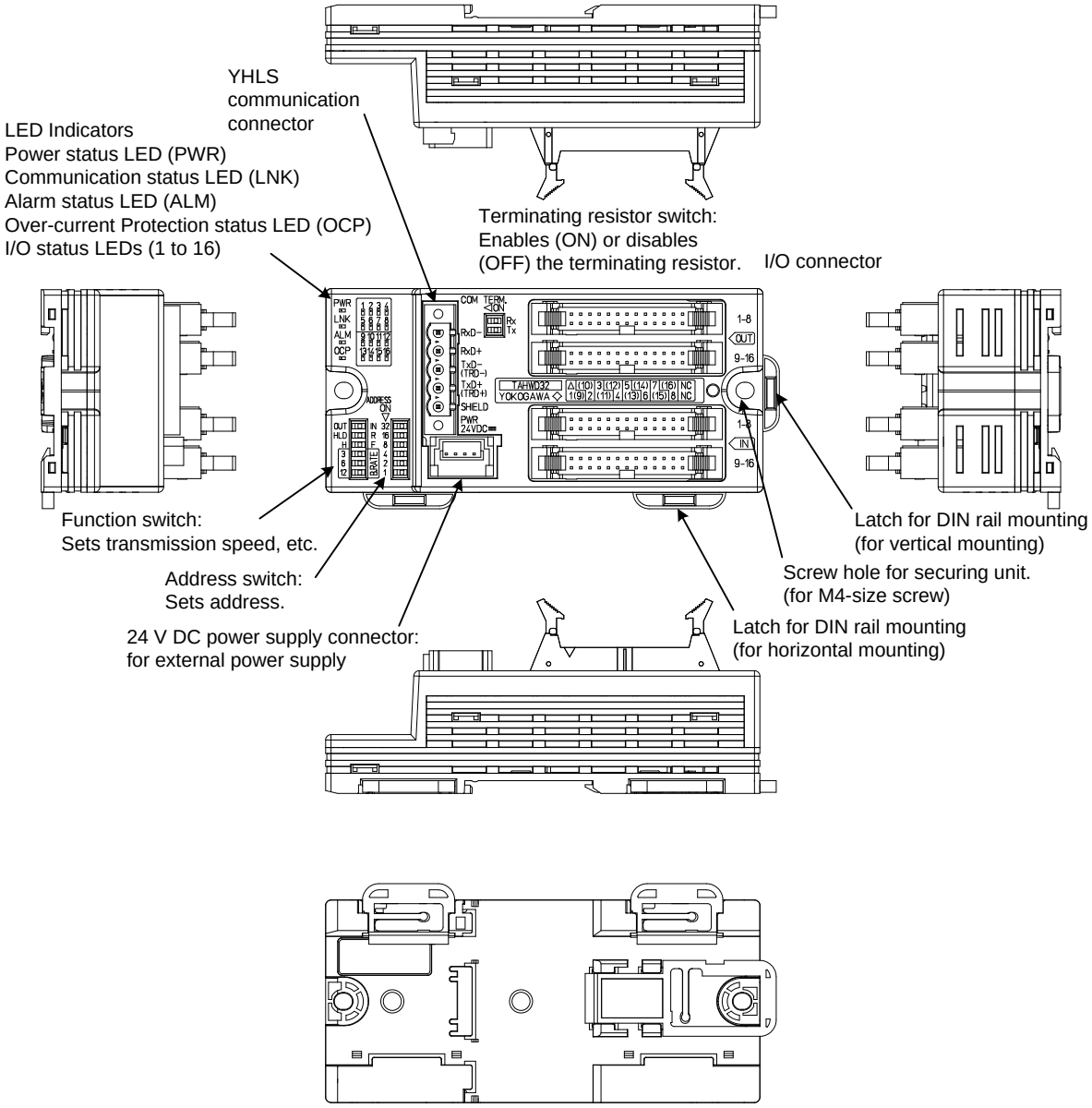

Note: The above figures show the appearance and display names of TAHWD32-3□□M.

■ External Dimensions Drawing

TAHWD32-3□□M

Unit: mm

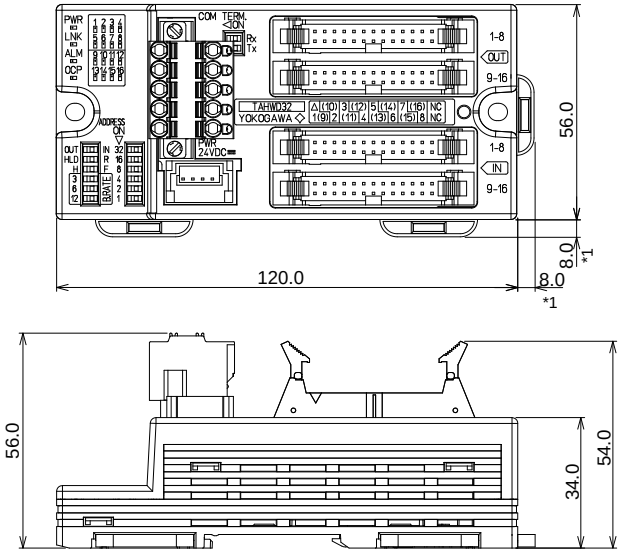

*1: Dimensions for DIN rail mounting and unmounting

TAHXD16-3□EM

Unit: mm

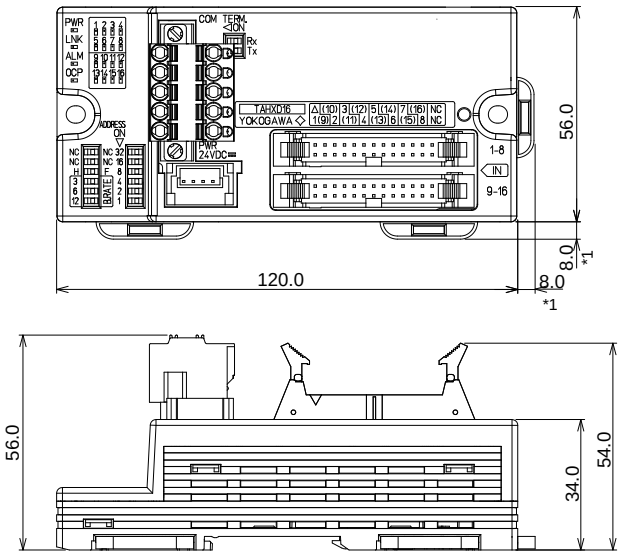

*1: Dimensions for DIN rail mounting and unmounting

TAHYD16-3E□M

Unit: mm

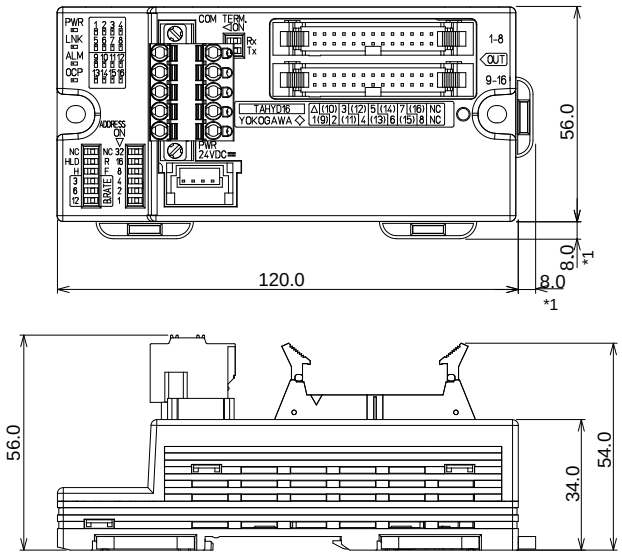

*1: Dimensions for DIN rail mounting and unmounting

3. YHLS Communications

3.1 Assigning Addresses to Slave Units

All YHLS slave units connected to a port of the YHLS master module must be each assigned a slave unit address. No two YHLS slave units connected to the same port of the YHLS master module can have the same address. A YHLS slave unit may be assigned any address from 1 to 63, regardless of its physical position relative to other slave units on the communication line.

CAUTION

In YHLS communications, the master module scans its slaves sequentially, starting from slave address 1 to the last slave address. The scan time is independent of the number of slave units actually connected but depends only on the last slave address. To minimize scan time, we recommend that you assign slave unit addresses sequentially, starting from 1.

3.2 Maximum Transmission Distance

Maximum transmission distance here refers to the total length of all segments of a transmission line from the YHLS master module to the farthest YHLS slave unit. The maximum allowable transmission distance depends on transmission speed.

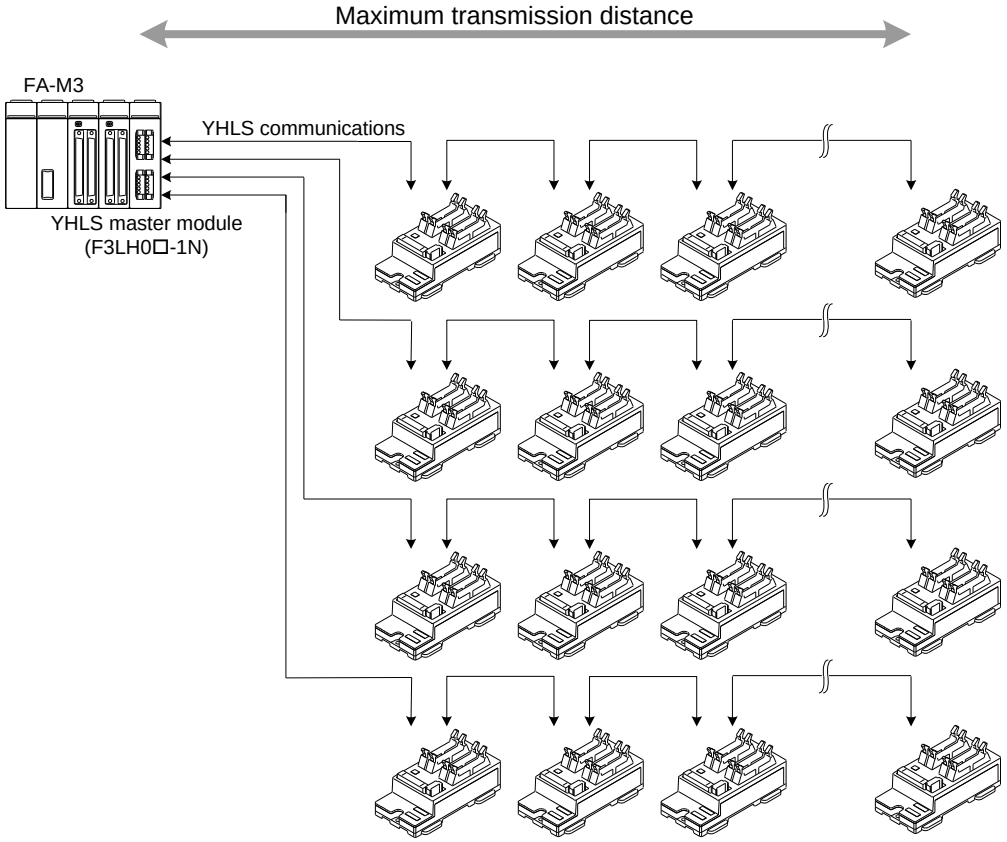

Maximum Transmission Distance (total length)	Transmission Speed
300 m	3 Mbps
200 m	6 Mbps
100 m	12 Mbps

CAUTION

Normal YHLS communications is not guaranteed if the maximum transmission distance is exceeded.

3.3 Maximum Number of YHLS Slave Units

The YHLS master module supports up to 63 YHLS slave units per port.

Each port of the YHLS master module has two connectors, each allowing up to 32 YHLS slave units to be connected. To connect 63 YHLS slave units, connect 32 units to one connector and 31 units to the other connector.

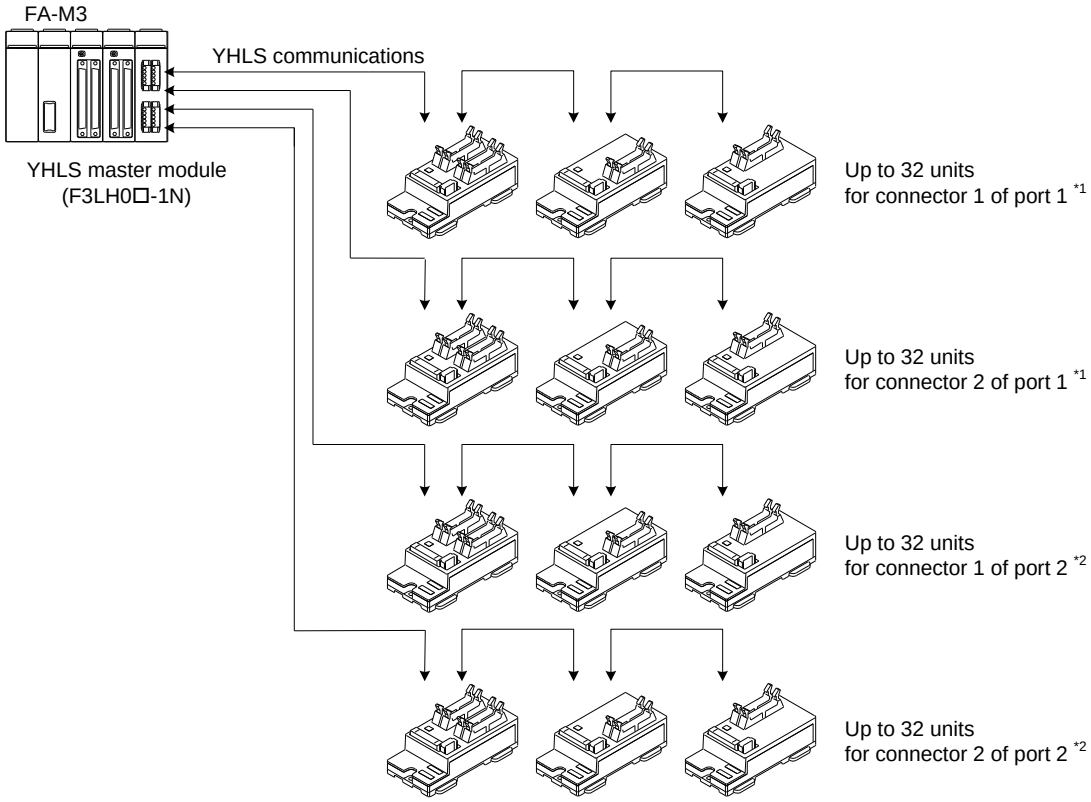

*1: Up to 63 units for port 1
*2: Up to 63 units for port 2

CAUTION

Normal YHLS communication is not guaranteed if more than 32 YHLS slave units are connected to the same connector of a YHLS master module.

Blank Page

4. Components

4.1 Appearance

- 16-input, 16-output unit（TAHWD32-3□□M）

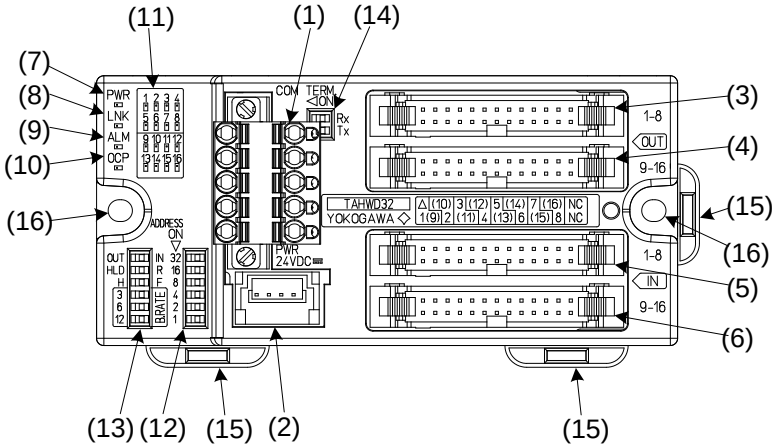

- 16-input unit (TAHXD16-3□EM)

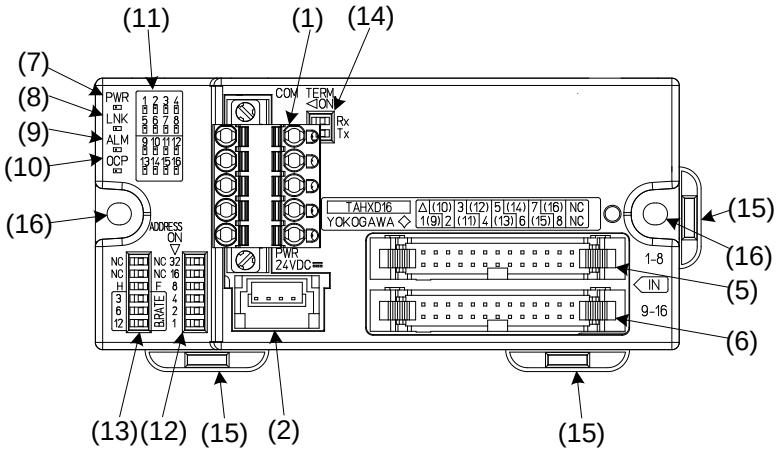

- 16-output unit（TAHYD16-3E□M）

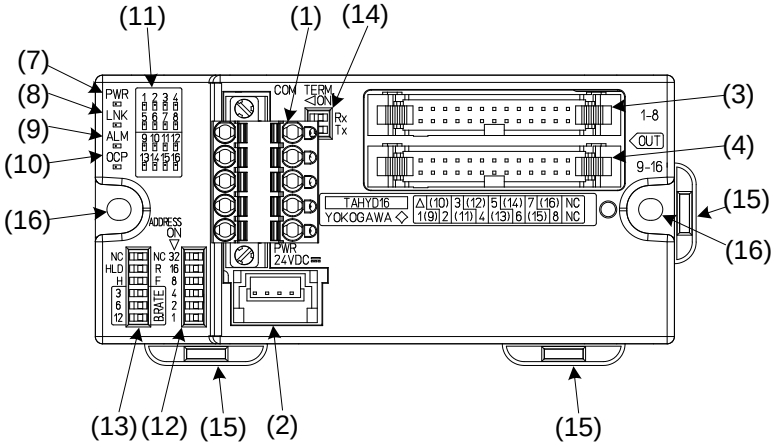

4.2 Components (Detailed Description)

4.2.1 Pin Assignment

● YHLS communication connector

No.	Component	Compatible Slave Units	Pin Assignment	Recommended Connector
1	YHLS communication connector (COM)	TAHWD32-3PAM TAHWD32-3NBM TAHXD16-3PEM TAHXD16-3NEM TAHYD16-3EAM TAHYD16-3EBM	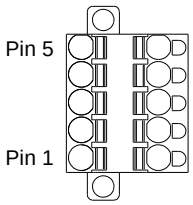 Pin#: 4-wire, full-duplex / 2-wire, half-duplex 5: RxD− / NC 4: RxD+ / NC 3: TxD− / TRD− 2: TxD+ / TRD+ 1: SHIELD / SHIELD	TFKC 2,5/5-STF-5,08 AU (from Phoenix Contact) (system furnished connector) For details, see "● Communication connectors on cable" in Subsection 4.2.2, "Connectors for External Connection."

● 24 V DC power supply connector

No.	Component	Compatible Slave Units	Pin Assignment	Recommended Connector
2	24 V DC power supply connector (PWR 24V DC)	TAHWD32-3PAM TAHWD32-3NBM TAHXD16-3PEM TAHXD16-3NEM TAHYD16-3EAM TAHYD16-3EBM	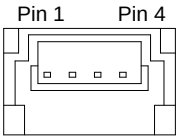 *1 Pin#: Symbol 4: N24Vin *1 3: N24Vin *1 2: P24Vin *1 1: P24Vin *1	38104-0018-000 FL (from Sumitomo 3M) Compatible wire: AWG18 (0.75mm^2) For details, see "● Power supply connectors on cable" in Subsection 4.2.2, "Connectors for External Connection."

*1: Connect the P24Vin and N24Vin pins to the positive and negative poles of the power supply respectively.
Pin 1 and pin 2, as well as pin 3 and pin 4, are shorted inside the slave unit.

● I/O connector (MIL type)

No.	Component	Compatible Slave Units	Pin Assignment	Recommended Connector
3	Output interface connector for 8-output connector (OUT 1 to 8)	TAHWD32-3PAM TAHWD32-3NBM TAHYD16-3EAM TAHYD16-3EBM	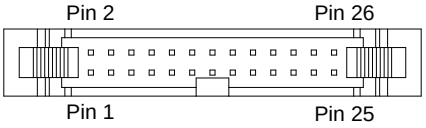	Insulation displacement: HIF3BA-26D-2.54R Crimping: HIF3BA-26D-2.54C (from Hirose Electric) For details, see "● I/O connectors (MIL type) on cable" in Subsection 4.2.2, "Connectors for External Connection."

Pin#	Symbol	Pin#	Symbol
26	N.C. *4	25	N.C. *4
24	OUT8	23	N24Vout *3
22	P24Vout *2	21	OUT7
20	N24Vout *3	19	P24Vout *2
18	OUT6	17	N24Vout *3
16	P24Vout *2	15	OUT5
14	N24Vout *3	13	P24Vout *2
12	OUT4	11	N24Vout *3
10	P24Vout *2	9	OUT3
8	N24Vout *3	7	P24Vout *2
6	OUT2	5	N24Vout *3
4	P24Vout *2	3	OUT1
2	N24Vout *3	1	P24Vout *2

<table>
<tr>
<td>4</td>
<td>Output interface connector for 8-output connector (OUT 9 to 16)</td>
<td>TAHWD32-3PAM
TAHWD32-3NBM
TAHYD16-3EAM
TAHYD16-3EBM</td>
<td>
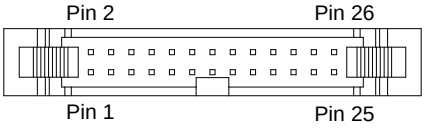

<table>
<tr><th>Pin#</th><th>Symbol</th><th>Pin#</th><th>Symbol</th></tr>
<tr><td>26</td><td>N.C. *4</td><td>25</td><td>N.C. *4</td></tr>
<tr><td>24</td><td>OUT16</td><td>23</td><td>N24Vout *3</td></tr>
<tr><td>22</td><td>P24Vout *2</td><td>21</td><td>OUT15</td></tr>
<tr><td>20</td><td>N24Vout *3</td><td>19</td><td>P24Vout *2</td></tr>
<tr><td>18</td><td>OUT14</td><td>17</td><td>N24Vout *3</td></tr>
<tr><td>16</td><td>P24Vout *2</td><td>15</td><td>OUT13</td></tr>
<tr><td>14</td><td>N24Vout *3</td><td>13</td><td>P24Vout *2</td></tr>
<tr><td>12</td><td>OUT12</td><td>11</td><td>N24Vout *3</td></tr>
<tr><td>10</td><td>P24Vout *2</td><td>9</td><td>OUT11</td></tr>
<tr><td>8</td><td>N24Vout *3</td><td>7</td><td>P24Vout *2</td></tr>
<tr><td>6</td><td>OUT10</td><td>5</td><td>N24Vout *3</td></tr>
<tr><td>4</td><td>P24Vout *2</td><td>3</td><td>OUT9</td></tr>
<tr><td>2</td><td>N24Vout *3</td><td>1</td><td>P24Vout *2</td></tr>
</table>
</td>
<td>Insulation displacement:
HIF3BA-26D-2.54R

Crimping:
HIF3BA-26D-2.54C
(From Hirose Electric)

For details, see “● I/O connectors (MIL type) on cable” in Subsection 4.2.2, “Connectors for External Connection.”</td>
</tr>
<tr>
<td>5</td>
<td>Input interface connector for 8-input connector (IN 1 to 8)</td>
<td>TAHWD32-3PAM
TAHWD32-3NBM
TAHXD16-3PEM
TAHXD16-3NEM</td>
<td>
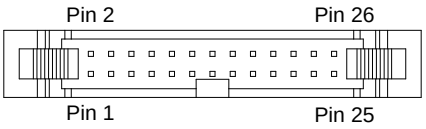

<table>
<tr><th>Pin#</th><th>Symbol</th><th>Pin#</th><th>Symbol</th></tr>
<tr><td>26</td><td>N.C. *4</td><td>25</td><td>N.C. *4</td></tr>
<tr><td>24</td><td>IN8</td><td>23</td><td>N24Vout *3</td></tr>
<tr><td>22</td><td>P24Vout *2</td><td>21</td><td>IN7</td></tr>
<tr><td>20</td><td>N24Vout *3</td><td>19</td><td>P24Vout *2</td></tr>
<tr><td>18</td><td>IN6</td><td>17</td><td>N24Vout *3</td></tr>
<tr><td>16</td><td>P24Vout *2</td><td>15</td><td>IN5</td></tr>
<tr><td>14</td><td>N24Vout *3</td><td>13</td><td>P24Vout *2</td></tr>
<tr><td>12</td><td>IN4</td><td>11</td><td>N24Vout *3</td></tr>
<tr><td>10</td><td>P24Vout *2</td><td>9</td><td>IN3</td></tr>
<tr><td>8</td><td>N24Vout *3</td><td>7</td><td>P24Vout *2</td></tr>
<tr><td>6</td><td>IN2</td><td>5</td><td>N24Vout *3</td></tr>
<tr><td>4</td><td>P24Vout *2</td><td>3</td><td>IN1</td></tr>
<tr><td>2</td><td>N24Vout *3</td><td>1</td><td>P24Vout *2</td></tr>
</table>
</td>
<td>Insulation displacement:
HIF3BA-26D-2.54R

Crimping:
HIF3BA-26D-2.54C
(From Hirose Electric)

For details, see “● I/O connectors (MIL type) on cable” in Subsection 4.2.2, “Connectors for External Connection.”</td>
</tr>
<tr>
<td>6</td>
<td>Input interface connector for 8-input connector (IN 9 to 16)</td>
<td>TAHWD32-3PAM
TAHWD32-3NBM
TAHXD16-3PEM
TAHXD16-3NEM</td>
<td>
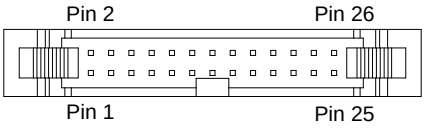

<table>
<tr><th>Pin#</th><th>Symbol</th><th>Pin#</th><th>Symbol</th></tr>
<tr><td>26</td><td>N.C. *4</td><td>25</td><td>N.C. *4</td></tr>
<tr><td>24</td><td>IN16</td><td>23</td><td>N24Vout *3</td></tr>
<tr><td>22</td><td>P24Vout *2</td><td>21</td><td>IN15</td></tr>
<tr><td>20</td><td>N24Vout *3</td><td>19</td><td>P24Vout *2</td></tr>
<tr><td>18</td><td>IN14</td><td>17</td><td>N24Vout *3</td></tr>
<tr><td>16</td><td>P24Vout *2</td><td>15</td><td>IN13</td></tr>
<tr><td>14</td><td>N24Vout *3</td><td>13</td><td>P24Vout *2</td></tr>
<tr><td>12</td><td>IN12</td><td>11</td><td>N24Vout *3</td></tr>
<tr><td>10</td><td>P24Vout *2</td><td>9</td><td>IN11</td></tr>
<tr><td>8</td><td>N24Vout *3</td><td>7</td><td>P24Vout *2</td></tr>
<tr><td>6</td><td>IN10</td><td>5</td><td>N24Vout *3</td></tr>
<tr><td>4</td><td>P24Vout *2</td><td>3</td><td>IN9</td></tr>
<tr><td>2</td><td>N24Vout *3</td><td>1</td><td>P24Vout *2</td></tr>
</table>
</td>
<td>Insulation displacement:
HIF3BA-26D-2.54R

Crimping:
HIF3BA-26D-2.54C
(From Hirose Electric)

For details, see “● I/O connectors (MIL type) on cable” in Subsection 4.2.2, “Connectors for External Connection.”</td>
</tr>
</table>

*2: Pins 1, 4, 7, 10, 13, 16, 19 and 22 (P24Vout) is the positive of the I/O power supply.
*3: Pins 2, 5, 8, 11, 14, 17, 20 and 23 (N24Vout) is the negative of the I/O power supply.
*4: Leave pins 25 and 26 (N.C.) unconnected.

4.2.2 Connectors for External Connection

Connector Type	Connector on Slave Unit	Connector on Cable
Power supply connector	Sumitomo 3M 38204-62S3-000PL	See "● Power supply connectors on cable" for details.
Communication connector	Phoenix Contact MSTBV2,5/5-GF-5,08 AU	See "● Communication connectors on cable" for details.
I/O connector	Hirose Electric HIF3CA-26PA-2.54DSA(71)	See "● I/O connectors (MIL type) on cable" for details.

● Power supply connectors on cable

Cable Type	AWG	Model	Manufacturer
Flat cable	AWG18	38104-0018-□00FL	Sumitomo 3M
	AWG20	38104-0020-□00FL	
Round cable	AWG18	38104-□018-□00FL	
	AWG20	38104-□020-□00FL	

● Communication connectors on cable

Connector Type	Lock	Model	Manufacturer
Spring type	With flange	TFKC 2,5/5STF-5,08 AU (comes with the slave unit)	Phoenix Contact
Screw type	With flange	TMSTBP 2,5/5-STF-5,08 AU	

● I/O connectors (MIL type) on cable

Connector Type		Model	Manufacturer
Crimp type	Socket	HIF3BA-26D-2.54C	Hirose Electric
	Pin	HIF3-2428SCA (for AWG#24-28, UL1007 strands)	
		HIF3-2226SCA (for AWG#22-26, UL1007 strands)	
		HIF3-2022SC (for AWG#20-22, UL1007 strands)	
Insulation displacement type	Socket	HIF3BA-26D-2.54R	

4.2.3 LED Indicators

No.	Component	Color	Description
7	Power supply status LED (PWR)	Green	Lit when power supply is on. *1 Not lit when power supply is off.
8	Communication status LED (LNK)	Green	Lit when the slave is communicating. Not lit when there is no communication.
9	Alarm status LED (ALM)	Yellow	Lit when there is a communication error. Not lit when the slave is communicating normally or has never participated in communication. *2
10	Over current protection status LED (OCP)	Red	Normally not lit. Lit when the short-circuit protector is activated.
11	I/O status LED (1, 2, 3, 4, 5, 6, 7, 8, 9, 10, 11, 12, 13, 14, 15 ,16)	Red	IN1 to IN16 : Lit when an input is on. Not lit when an input is off or open. OUT1 to OUT16 : Lit when an output is on. Not lit when an output is off.

*1: The PWR LED is not lit when the supplied voltage is 15 VDC or lower but lit when the supplied voltage is 19.5 V DC or higher.
*2: The ALM LED does not light up if the LNK LED has never been lit after the unit is powered on.

4.2.4 Switches

● Address **switch**

No.	Component	Description
12	Address switch	(Factory setting) 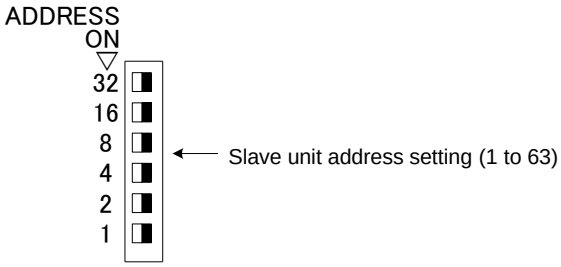

● **Function** switch

No.	Component	Description
13	Function switch	(Factory setting) 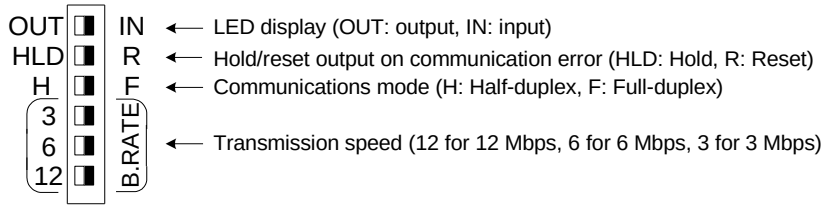 The above figure shows the function switch markings for TAHEWD32-3☐☐M. Some functions may not be available for some models (such functions will be marked as "NC").

● **Terminating resistor** switch

No.	Component	Description
14	Terminating resistor switch	(Factory setting: all OFF) 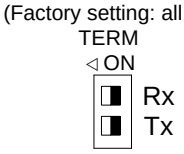 Only the YHLS slave unit at the end of a YHLS transmission line should have its terminating resistor switch set to ON.

4.2.5 Components for Mounting the Module

● **Latch for DIN-rail** mounting

No.	Component	Description
15	Latch for DIN-rail mounting (for horizontal and vertical mounting)	Used for mounting a YHLS slave unit to a 35-mm DIN rail.

● **Hole for securing the unit**

No.	Component	Description
16	Hole for securing the unit (for horizontal and vertical mounting)	Two screws to be purchased separately are required. For details, see Section 7.4, “Mounting Dimensions ● Screw Mounting”

Blank Page

5. Setup

5.1 Slave Unit Address Setup

Before starting communications, you must define the address of each YHLS slave unit as a number between 1 and 63 using its 6-bit address switch. The factory setting is 0. Using this address setup, up to 63 YHLS slave units can be connected to each port of the YHLS master module (up to 32 slave units per connector).

Beware that no two YHLS slave units connected to the same port of a YHLS master module can have the same address. Slave unit addresses are assigned on port basis, so slave unit addresses 1 to 63 can be specified for each of the two ports of the F3LH02-1N master module.

CAUTION

- When designing a YHLS system and setting up slave unit addresses, beware that if two or more slave units connected to the same port of the YHLS master module have the same address, slave units with unique addresses will communicate normally but slave units with duplicated addresses will fail to communicate normally.
- Always discharge static electricity before performing switch setup.

5.1.1 Setup Procedure

Use the 6-pole address switch (labeled as 32, 16, 8, 4, 2, and 1) of a YHLS slave unit to assign an address. The address is obtained by adding the labeled numbers beside switch elements that are pushed towards the labeled numbers (set to ON).

For instance, to define a slave address of 10, set poles labeled 8 and 2 of the address switch to ON (10=8+2). Similarly, to define a slave address of 63, set all poles of the address switch to ON (63=32+16+8+4+2+1).

Slave units are shipped with the address setting 0, which is assigned to the YHLS master module, so all slave units must be assigned with addresses between 1 and 63 during setup.

Table 5.1, "Slave Unit Address Setup Table" shows the mapping between addresses and address DIP switch settings.

(Factory setting: all OFF)

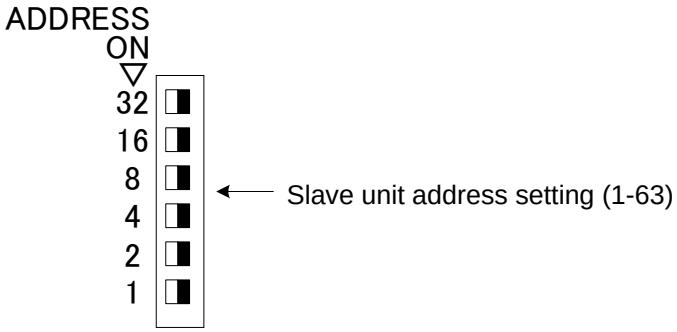

Table 5.1 Slave Unit Address Setup Table

DIP switch setting \ Slave address	0 (Factory setting)	1	2	3	4	5	6	7	8	9	10	11	12	13	14	15
32	◨	◨	◨	◨	◨	◨	◨	◨	◨	◨	◨	◨	◨	◨	◨	◨	◨
16	◨	◨	◨	◨	◨	◨	◨	◨	◨	◨	◨	◨	◨	◨	◨	◨	◨
8	□	◨	◨	◨	◨	◨	◨	◨	◨	◧	◧	◧	◧	◧	◧	◧	◧
4	□	◨	◨	◨	◨	◧	◧	◧	◧	◨	◨	◨	◨	◧	◧	◧	◧
2	□	◨	◨	◨	◧	◧	◧	◧	◨	◨	◨	◧	◧	◨	◨	◧	◧
1	□	◨	◧	◨	◧	◨	◧	◨	◧	◨	◧	◨	◧	◨	◧	◨	◧

DIP switch setting \ Slave address	16	17	18	19	20	21	22	23	24	25	26	27	28	29	30	31
32	◨	◨	◨	◨	◨	◨	◨	◨	◨	◨	◨	◨	◨	◨	◨	◨
16	◧	◧	◧	◧	◧	◧	◧	◧	◧	◧	◧	◧	◧	◧	◧	◧
8	□	◨	◨	◨	◨	◨	◨	◨	◨	◧	◧	◧	◧	◧	◧	◧
4	□	◨	◨	◨	◨	◧	◧	◧	◧	◨	◨	◨	◨	◧	◧	◧	◧
2	□	◨	◨	◧	◧	◨	◨	◧	◧	◨	◨	◧	◧	◨	◨	◧	◧
1	□	◨	◧	◨	◧	◨	◧	◨	◧	◨	◧	◨	◧	◨	◧	◨	◧

DIP switch setting \ Slave address	32	33	34	35	36	37	38	39	40	41	42	43	44	45	46	47
32	◧	◧	◧	◧	◧	◧	◧	◧	◧	◧	◧	◧	◧	◧	◧	◧	◧
16	◨	◨	◨	◨	◨	◨	◨	◨	◨	◨	◨	◨	◨	◨	◨	◨	◨
8	□	◨	◨	◨	◨	◨	◨	◨	◨	◧	◧	◧	◧	◧	◧	◧	◧
4	□	◨	◨	◨	◨	◧	◧	◧	◧	◨	◨	◨	◨	◧	◧	◧	◧
2	□	◨	◨	◧	◧	◨	◨	◧	◧	◨	◨	◧	◧	◨	◨	◧	◧
1	□	◨	◧	◨	◧	◨	◧	◨	◧	◨	◧	◨	◧	◨	◧	◨	◧

DIP switch setting \ Slave address	48	49	50	51	52	53	54	55	56	57	58	59	60	61	62	63
32	◧	◧	◧	◧	◧	◧	◧	◧	◧	◧	◧	◧	◧	◧	◧	◧	◧
16	◧	◧	◧	◧	◧	◧	◧	◧	◧	◧	◧	◧	◧	◧	◧	◧	◧
8	□	◨	◨	◨	◨	◨	◨	◨	◨	◧	◧	◧	◧	◧	◧	◧	◧
4	□	◨	◨	◨	◨	◧	◧	◧	◧	◨	◨	◨	◨	◧	◧	◧	◧
2	□	◨	◨	◧	◧	◨	◨	◧	◧	◨	◨	◧	◧	◨	◨	◧	◧
1	□	◨	◧	◨	◧	◨	◧	◨	◧	◨	◧	◨	◧	◨	◧	◨	◧

In the figure, black areas represent switch element positions. Pushing a switch element towards its number label (1, 2, 4, 8, 16 or 32) turns it on.

5.2 Transmission Speed Setup

Use three bits of the function switch of a YHLS slave unit to define its transmission speed. No transmission speed is defined at the factory. You must specify the same transmission speed for both the master module and the slave unit.

To select a transmission speed, move only one of the three bits labeled “3”, “6” and “12” to its number label. Specifically,

To specify 12 Mbps, move only the bit labeled "12" to the "12" label.

To specify 6 Mbps, move only the bit labeled "6" to the "6" label.

To specify 3 Mbps, move only the bit labeled "3" to the "3" label.

(Factory setting)

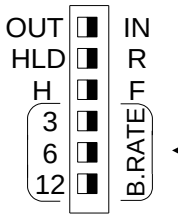

← Transmission speed setting
(12: 12 Mbps, 6: 6 Mbps, 3: 3 Mbps)

	Transmission Speed
3	3 Mbps
6	6 Mbps
12	12 Mbps

CAUTION

- If two or more bits (bits 12 and 6, for example) are set to ON concurrently, the higher transmission speed (12 in this case) takes precedence.
- Maximum transmission distance depends on transmission speed: 300 m at 3 Mbps, 200 m at 6 Mbps or 100 m at 12 Mbps.
- Always discharge static electricity before performing switch setup.

5.3 Communications Mode Setup

Use the communications mode switch element of a YHLS slave unit to define its communications mode. The factory setting is full-duplex communications. You must specify the same communications mode for both the master module and the slave unit.

To specify full-duplex communications, move the switch to the “F” side. To specify half-duplex communications, move the switch to the “H” side.

(Factory setting)

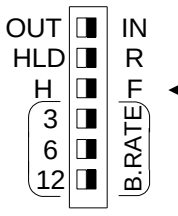

← Communications mode
(H: Half-duplex, F: Full-duplex)

	H	F
Communications mode	Half-duplex	Full-duplex

CAUTION

Always discharge static electricity before performing switch setup.

5.4 Output Control Function Setup

You can specify whether to reset (shutdown) or hold the contact outputs of a YHLS slave unit in the event that it is not scanned by YHLS communications for a certain time period. The factory setting is RESET.

Table

Transmission speed	Maximum No-scan Duration
12 Mbps	10.88 ms
6 Mbps	21.76 ms
3 Mbps	87.04 ms

The following are some possible reasons why a slave unit is not scanned:

(1) YHLS communications is suspended;

(2) The YHLS communication cable is broken;

(3) The YHLS communication connector of the slave unit is dislodged; or

(4) The OCP (Over Current Protection) function is activated because of a short-circuit condition in the external power supply or other reasons.

To shutdown the contact outputs when YHLS communications is suspended, set the switch to ‘R’. To hold contact outputs instead, set the switch to ‘HLD’.

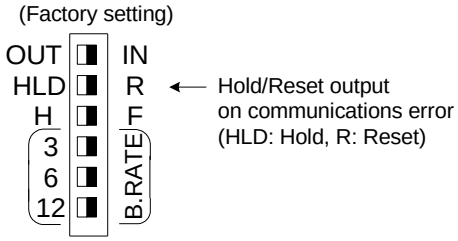

	HLD	R
Hold/Reset output on communications error	Hold	Reset

CAUTION

- This function is not supported by 16-input units.

  (For these slave units, switch markings “HLD” and “R” shown in the above figure are replaced by “NC” to indicate non-availability of the function.)
- Always discharge static electricity before performing switch setup.

5.5 LED Display Setup

Use the LED display switch of a YHLS slave unit to specify whether input states or output states are to be displayed by its I/O status LED indicators.

Push the LED display switch element towards the “IN” label to display states of inputs 1 to 16; push the LED display switch element towards the "OUT" label to display states of outputs 1 to 16.

(Factory setting)

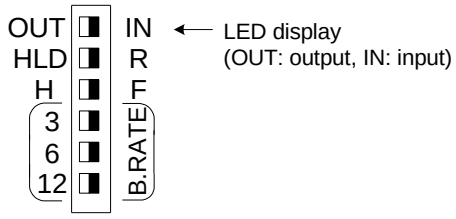

	OUT	IN
LED display	Output	Input

CAUTION

- This function is not supported by 16-points units.

  (For these units, switch markings “OUT” and “IN” shown in the above figure are replaced by “NC” to indicate non-availability of the function.)
- Always discharge static electricity before performing switch setup.

5.6 Terminating Resistor Switch Setup

Only the YHLS slave unit farthest from the YHLS master module on a transmission line for each connector should have its terminating resistor switch set to ON.

The factory setting is OFF.

To specify full-duplex communications, set both the Tx and Rx switches to ON. To specify half-duplex communications, set only the Tx switch to ON.

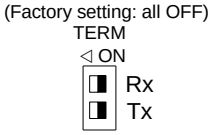

For full-duplex communications:

	Intermediate station	Terminal station
Rx	OFF	ON
Tx	OFF	ON

For half-duplex communications:

	Intermediate station	Terminal station
Rx	OFF	OFF
Tx	OFF	ON

Note:
Always set both Rx and Tx to ON. If only Rx or Tx is set to ON, the setting will be ignored.

CAUTION

- The terminal station is not necessarily the slave unit having the largest slave address. Rather, it is the slave unit that is physically farthest from the YHLS master module on a YHLS transmission line for each connector. You must set the terminating resistor switch of every terminal station to ON (the factory setting is OFF). Setting the terminating resistor switch of a slave unit to ON (or OFF) enables (or, respectively, disables) its internal terminating resistor. Do not enable the terminating resistor switch of a non-terminal station. Otherwise, communications may become unreliable or fail.
- Always discharge static electricity before performing switch setup.

6. YHLS Communications Data Areas

6.1 Input Data Area

Contact inputs of the TAHWD32-3☐☐M and contact inputs of the TAHXD16-3☐☐M are mapped to bits in the input data area of the master module (F3LH0☐-1N).

Each slave address is allocated a 16-bit location in the input data area. Data position numbers 1 to 63 are allocated to slave units connected to port 1 of the master module and data position numbers 65 to 127 are allocated to slave units connected to port 2 of the master module in ascending order of the slave addresses.

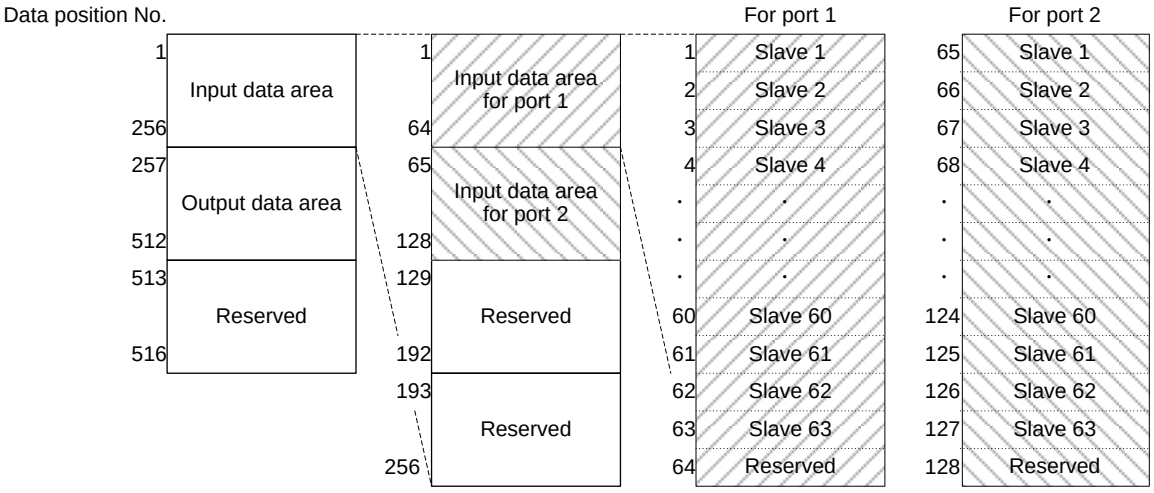

(1) How input data (IN1-16) from a 16-input slave unit is stored in the input data area:

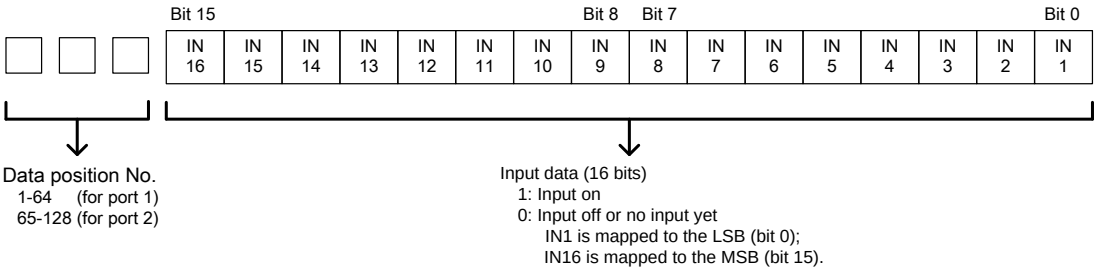

TIP

For details on the YHLS status area, see “YHLS Master Module User’s Manual” (IM34M6H46-04E).

6.2 Output Data Area

Contact outputs of the TAHWD32-3□□M and contact outputs of the TAHYD16-3□□M are mapped to bits in the output data area of the master module (F3LH0□-1N).

Each slave address is allocated a 16-bit location in the output data area. Data position numbers 257 to 319 are allocated to slave units connected to port 1 of the master module and data position numbers 321 to 383 are allocated to slave units connected to port 2 of the master module in ascending order of the slave addresses.

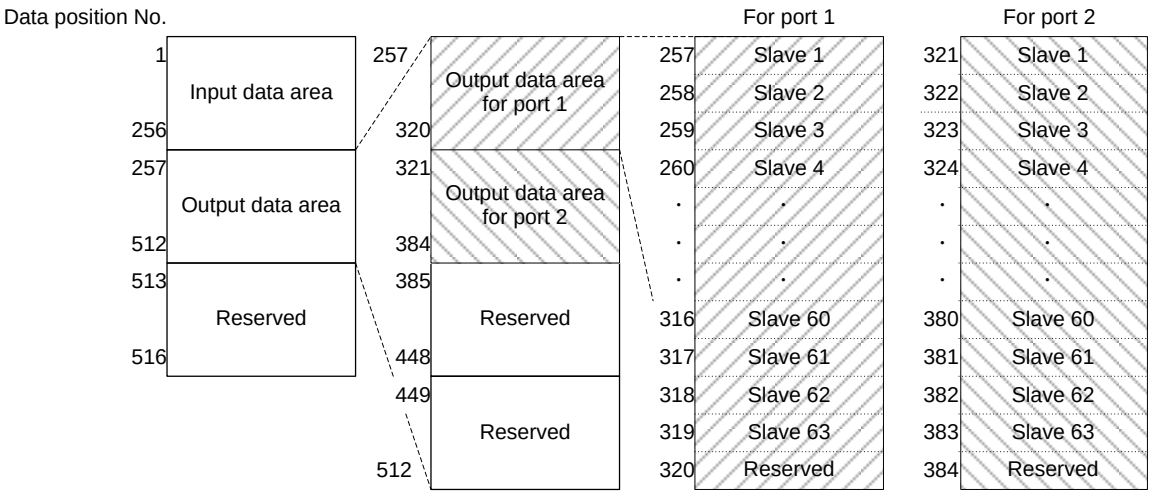

(1) How output data (OUT1-16) stored in the output data area is sent to a 16-output slave unit:

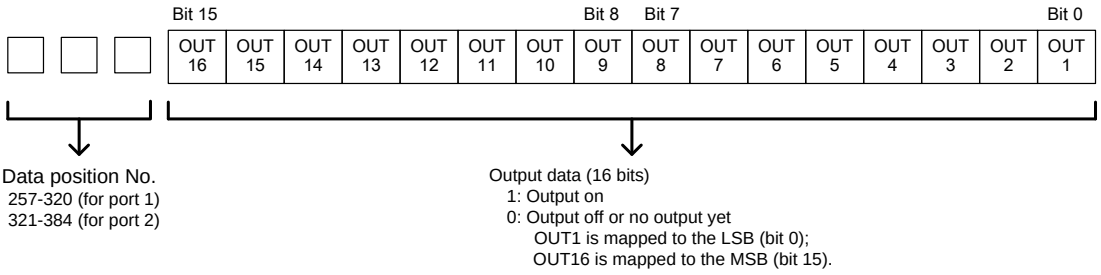

TIP

For details on the YHLS status area, see “YHLS Master Module User’s Manual” (IM34M6H46-04E).

7. Installation

7.1 Installation Sites

Observe the following precautions when installing the YHLS slave units in hostile environments.

Installation Site	Precautions
Inside a control panel enclosure	Provide at least 100 mm and 135 mm clearance between a YHLS slave unit and the ceiling and side wall respectively of the control panel enclosure. The control panel must be sufficiently large or provided with cooling so that the ambient temperature as measured 100 mm below the YHLS slave unit does not exceed 55°C.
Near a heat source	A YHLS slave unit must be installed in a control panel so that its ambient temperature does not exceed 55°C due to heat radiation or convection from a heat source.
Near a vibration source	A YHLS slave unit must be mounted with an anti-vibration device in a control panel to protect it against vibration.
In corrosive atmosphere	A YHLS slave unit must be installed in a control panel enclosure that prevents the ingress of corrosive gases. Exposure to corrosive gases may cause its electrical contacts to fail over time.
At other places	A YHLS slave unit must be installed in a control panel enclosure away from high temperature, high humidity, heavy dust or air-borne iron particles.

7.2 Orientation, Separation and Ambient Temperature Requirements for Cluster Mounting

When mounting two or more YHLS slave units together, the orientation, separation and ambient temperature requirements described in this section must be satisfied.

How to mount on a DIN rail and where to position mounting screws are the same as for single unit mounting.

- **Mounting orientation**
  (the pictures below assume that slave units are mounted on a DIN rail)

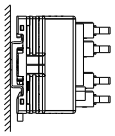	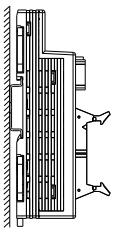	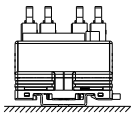
✓ (OK)	✓ (OK)	✓ (OK)
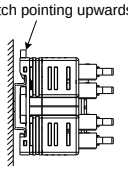	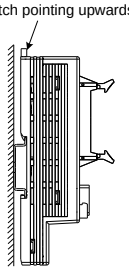	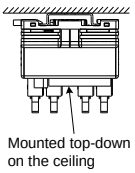
× (Not good)	× (Not good)	× (Not good)

● Separation and ambient temperature requirements (for horizontal cluster)

The ambient temperature for a slave unit must be measured 100 mm or more below it if there is no heat source underneath. If there is a heat source (including another slave unit) underneath a slave unit, the ambient temperature must be measured at the mid-point between the slave unit and the heat source.

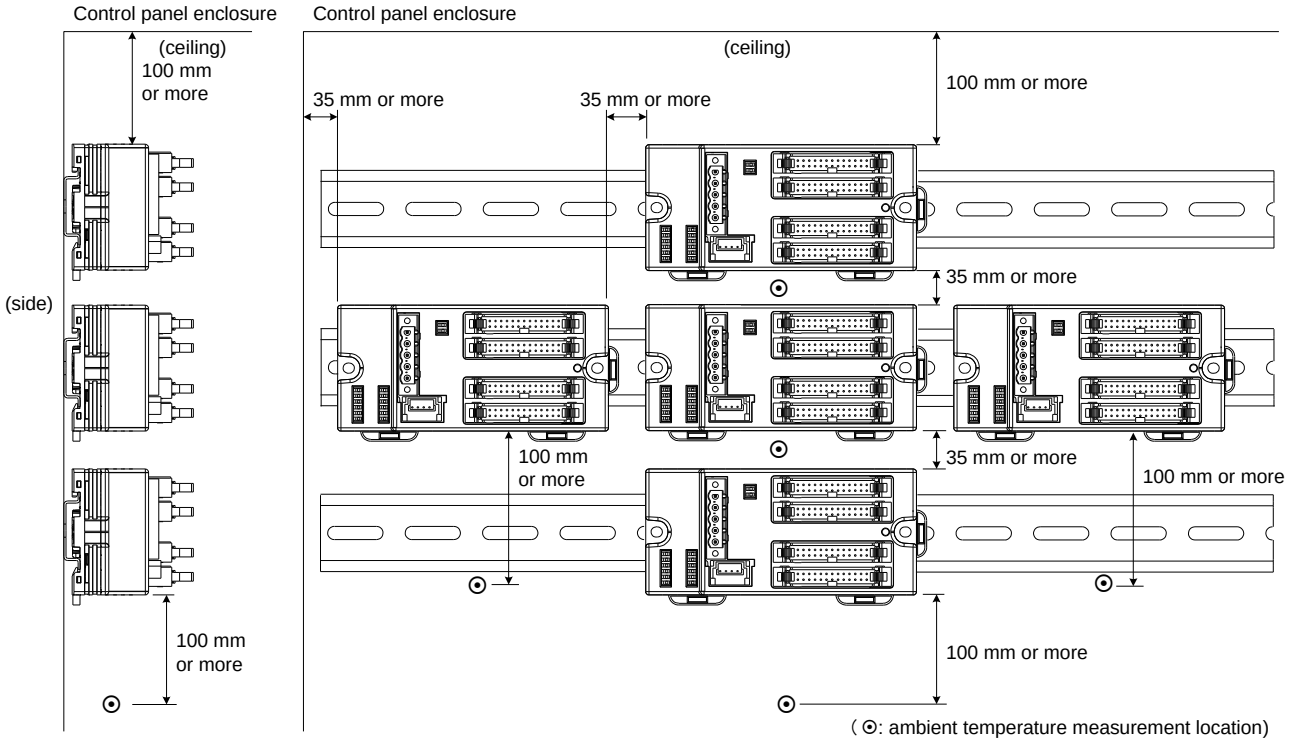

● Separation and ambient temperature requirements (for vertical cluster)

The ambient temperature for a slave unit must be measured 100 mm or more below it if there is no heat source underneath. If there is a heat source (including another slave unit) underneath a slave unit, the ambient temperature must be measured at the mid-point between the slave unit and the heat source.

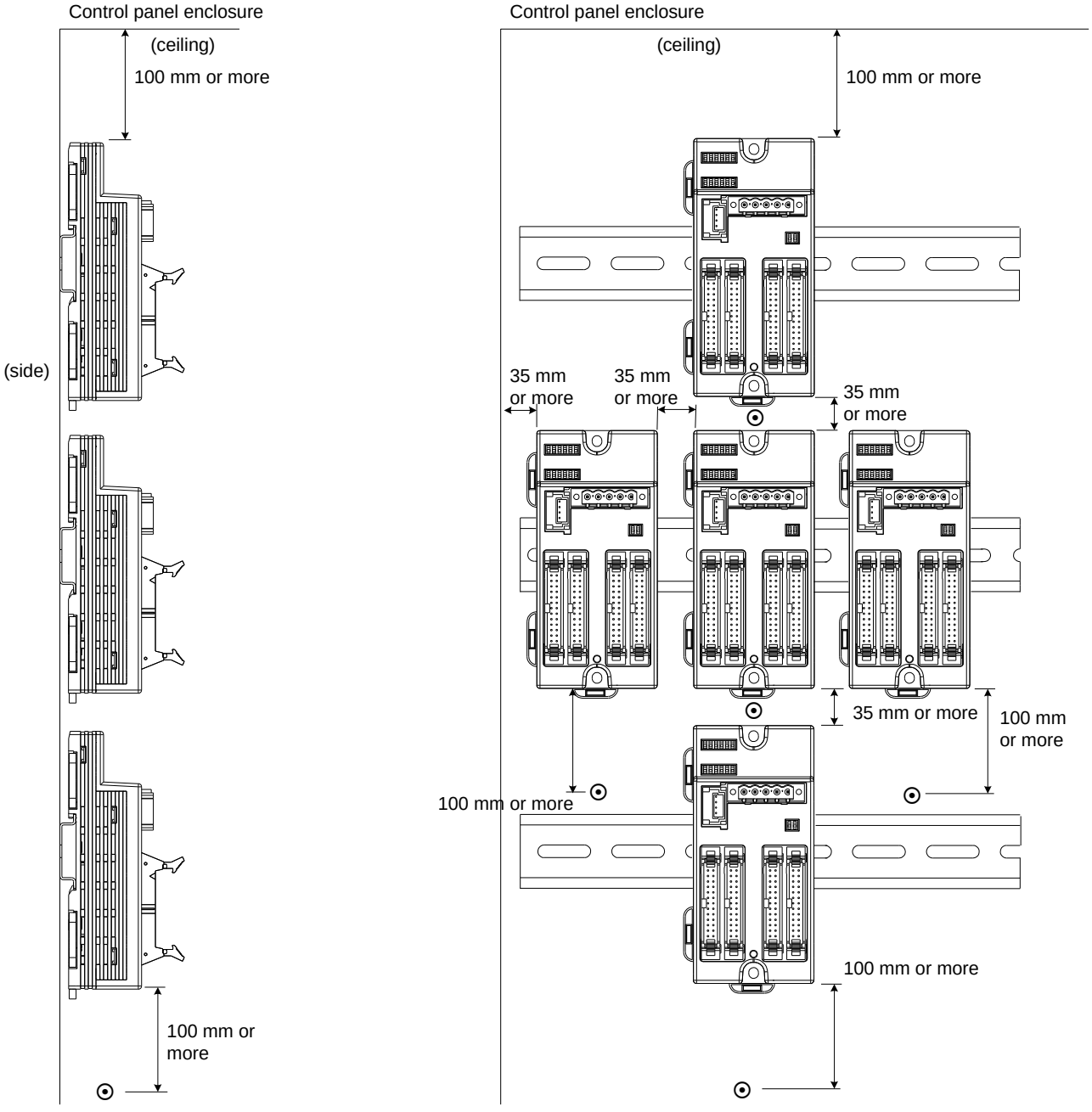

7.3 Attaching to and Detaching from DIN Rail

YHLS slave units are designed for mounting onto a 35-mm wide and 7.5-mm high DIN rail. After mounting a slave unit onto a DIN rail, secure it on both sides using metal stoppers to prevent it from moving. Note that YHLS slave units do not come with the metal stoppers. When removing a slave unit from a DIN rail, remove the metal stoppers first, followed by the slave unit.

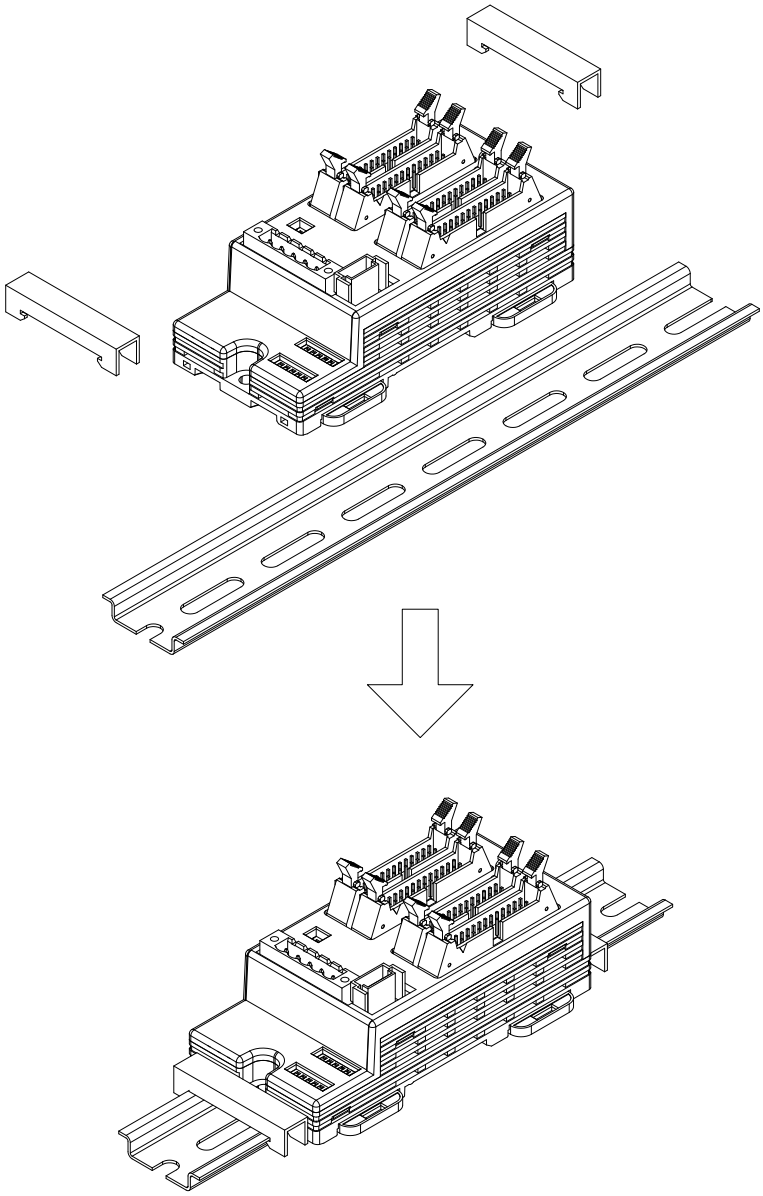

How to attach a slave unit

(1) Place a slave unit on a DIN rail and hook the side without latches onto one edge of the rail as shown below.

(2) Push the latch side of the slave unit down until the latches click into engagement with the other edge of the rail.
(Do not force if the latches do not catch easily. Draw the two latches outwards using flat-blade screwdrivers, push the slave unit down and push in the latch.)

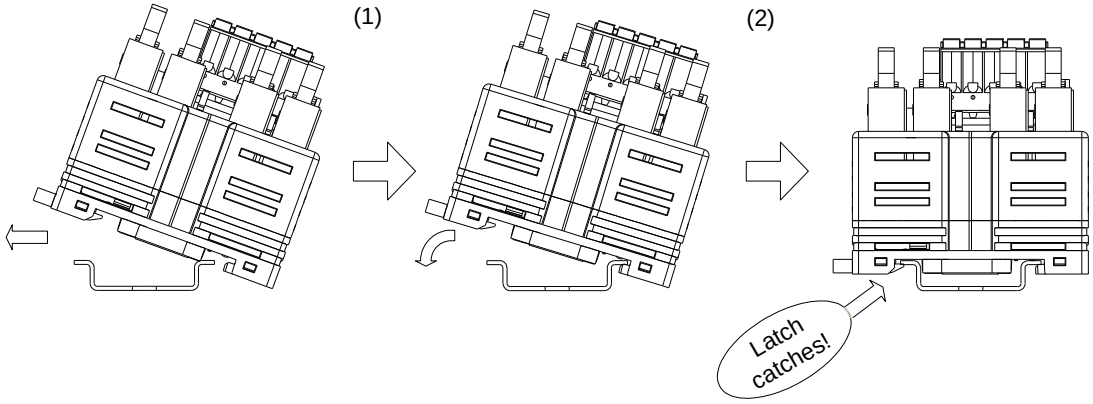

How to detach a slave unit

(1) Draw the two latches for DIN rail mounting outwards using flat-blade screwdrivers as shown below.

(2) Keep the latch drawn, and lift the latch side of the slave unit off the DIN rail.

(3) Remove the slave unit by moving it toward its side without latches.
(Do not rotate the slave unit by force.)

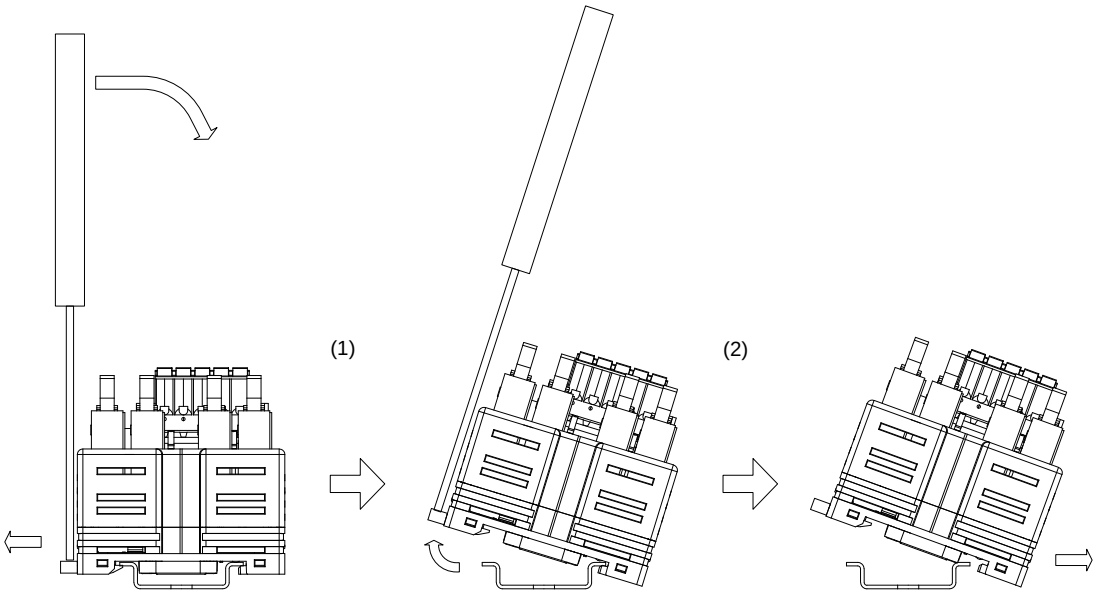

7.4 Mounting Dimensions

● DIN rail mounting

Unit: mm

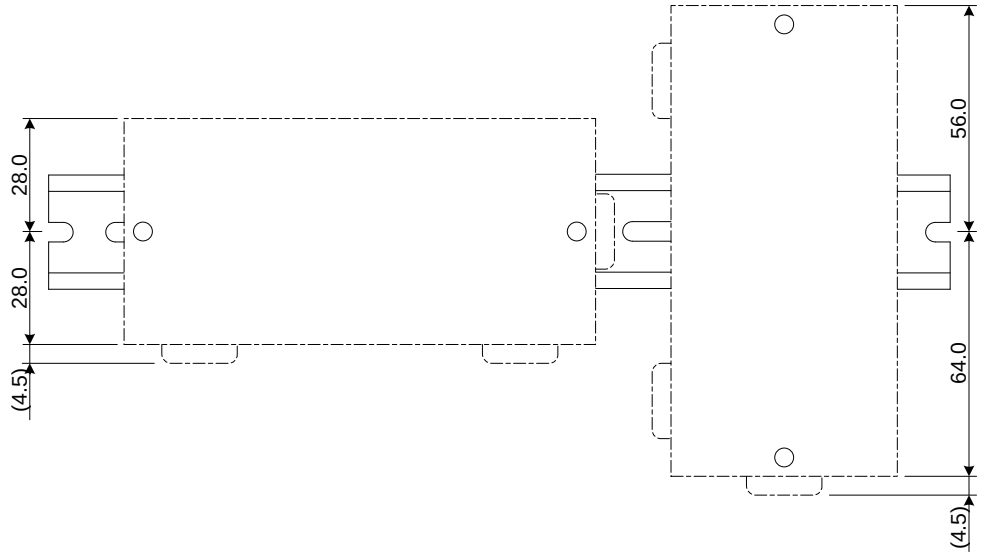

● Position of mounting screws for DIN rail

1. The screw heads of mounting screws for the DIN rail must not extend into the mounting plane of the DIN rail and slave unit.
2. If the YHLS slave unit is to be attached to a DIN rail horizontally, position the mounting screws for the DIN rail outside the hatched area shown below.

Unit: mm

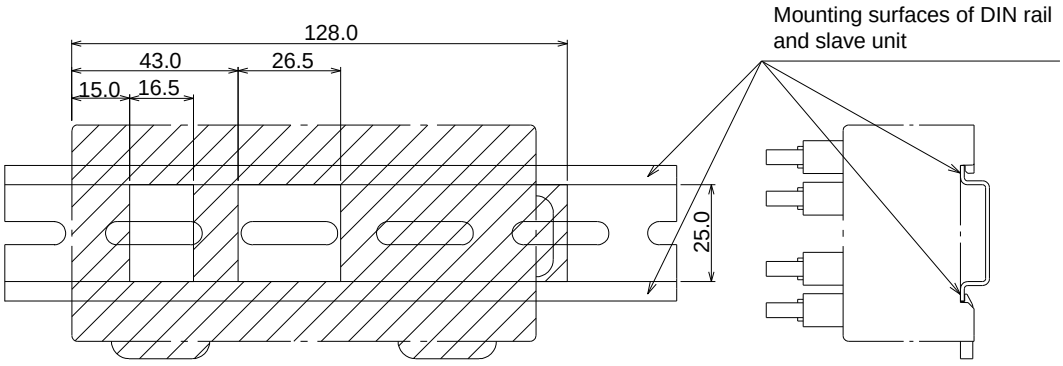

- **Screw mounting**

The figure below shows the dimensions drawing for screw mounting.

Unit: mm

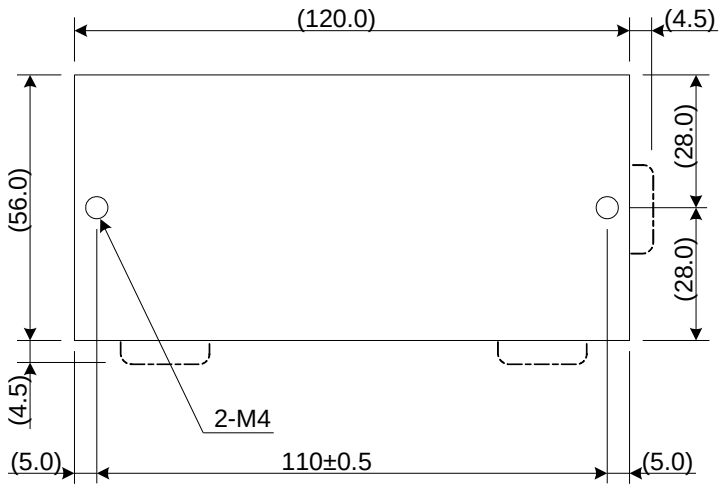

The slave unit does not come with mounting screws.

Two mounting screws are needed to mount the slave unit.

Recommended mounting screws are M4 binding-head screws at least 10 mm long (12 mm long if a washer is used). The screw tightening torque is 0.8 N·m (1.9 lbf·in).

7.5 Mounting Depth

The mounting depth must be at least 60.0 mm plus D as shown below, where 60.0mm is the height of the slave unit as measured from the mounting plane of a DIN rail and D is the required clearance for cable installation. The table below shows the value of D when recommended cables are used.

Unit: mm

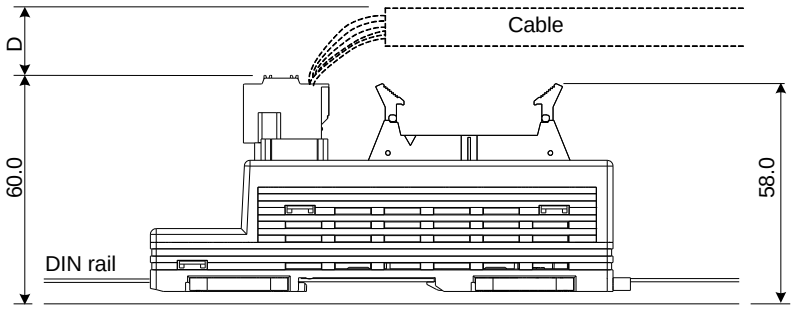

Recommended Cable	D (mm)
Fixed cable: YOKOGAWA YHLS KM80	14.0
Flexible cable: YOKOGAWA YHLS KM81	19.0

7.6 Cabling Precautions

To prevent product damage or personnel injuries, observe the safety precautions described below when cabling YHLS slave units.

● Temporary sealing label

The YHLS slave unit comes with a temporary sealing label on its side. The label is intended to prevent cable or wire fragments produced during cabling or wiring from entering the unit. Keep the label attached throughout cabling. Remove the label only after completion of cabling work.

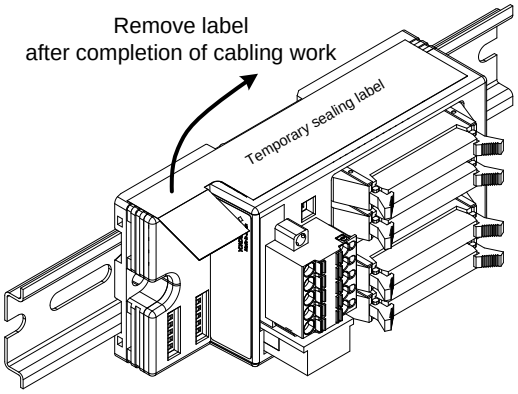

CAUTION

- Keep the label attached throughout cabling of the slave unit.
- You must remove the label upon completion of cabling work.

● Separate from high-voltage cables

Lay communication cables and I/O cables of YHLS slave units at least 20 cm away from all high-voltage, power, or high frequency cables. If a 20-cm minimum separation distance is not practical, lay YHLS slave unit cables in an electrically conductive duct with an electrically conductive partition to electrically shield the cables. The duct must be JIS class-D (class-3) grounded.

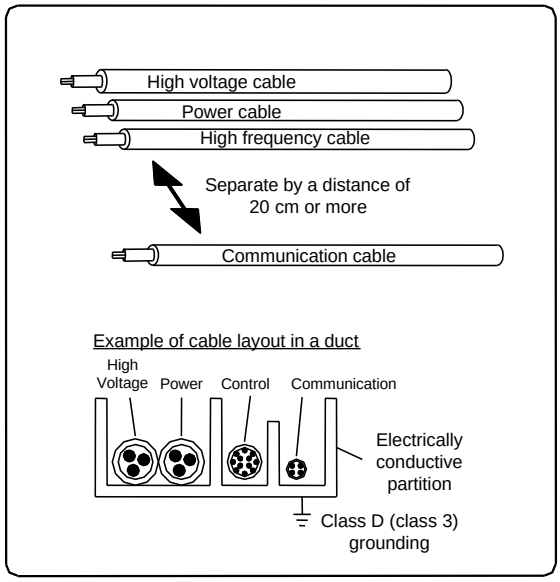

● Lay cables at right angles to each other

If there is a need to arrange motive-power or power supply cables and signal cables such that they cross over each other, ensure that they are laid at right angles to each other.

If signal cables are not of shielded type, it is recommended to place a 1.6 mm or thicker iron plate (shown in dotted line below) at the intersection with power supply cables.

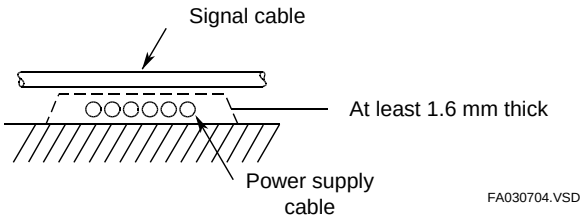

● Connecting Input Devices

If an input device connected to a slave unit includes an inductive load, connect a diode or some other surge suppressor near the inductive load as shown below to protect the slave unit against overvoltage.

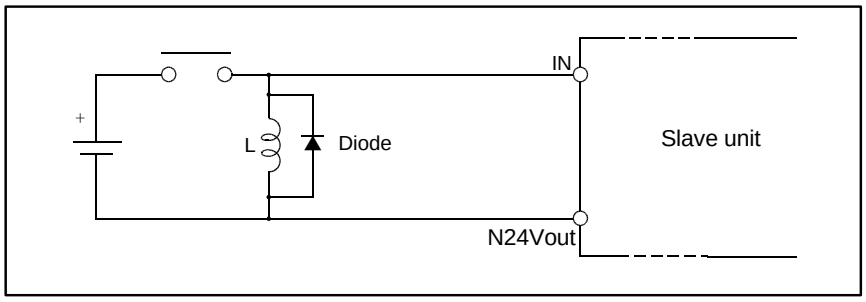

- Diode

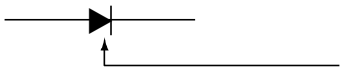

Reverse voltage: At least 3 times the circuit voltage
Forward current: At least 2 times the inductive load current

● Connecting Output Devices

If an output device connected to a slave unit includes an inductive load, connect a diode or other surge suppressor near the inductive load as shown below to protect the slave unit against overvoltage.

If a diode is used for surge suppression, its orientation must be such that its cathode terminal is on the positive side of the power supply.

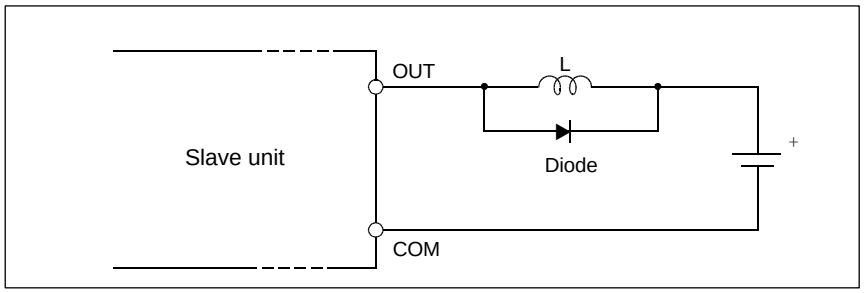

- Diode

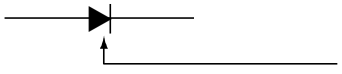

Reverse voltage: At least 3 times the circuit voltage
Forward current: At least 2 times the inductive load current

Noise control considerations

(1) Separating signal cables from motive-power lines
Route motive-power lines so that they are no closer than 20 cm to a slave unit or any signal cables coming from it. If this is not feasible, route motive-power lines through a metal conduit grounded according to the requirement of JIS Class D grounding (earlier JIS Class 3 grounding).

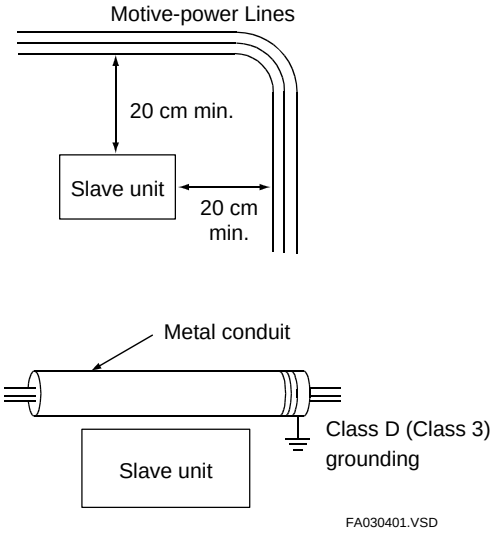

(2) Protecting against noise coming through the power line
It is recommended to insert a noise filter in the power line if the power line is noisy.

(3) Protecting I/O signals against noise
If an input or output device with an inductive load is connected to a slave unit, protect its I/O signals from inductor-induced noise by installing a diode or some other surge suppressor near the inductive load (see the descriptions entitled “Connecting Input Devices” and “Connecting Output Devices” above).

CAUTION

Install a surge arrester or other protective devices if a slave unit is used in a lightning-prone area.

8. External Connections

8.1 YHLS Communications Line

The two figures below show the required connections for 4-wire full-duplex communications and 2-wire half-duplex communications respectively.

(1) 4-wire full-duplex communications

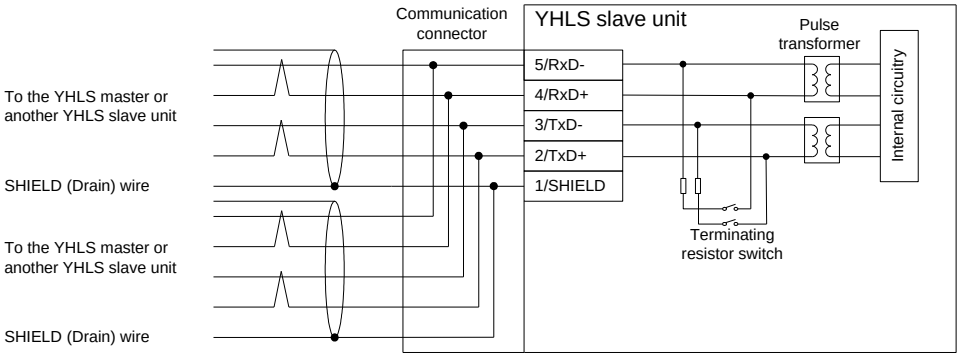

(2) 2-wire half-duplex communications

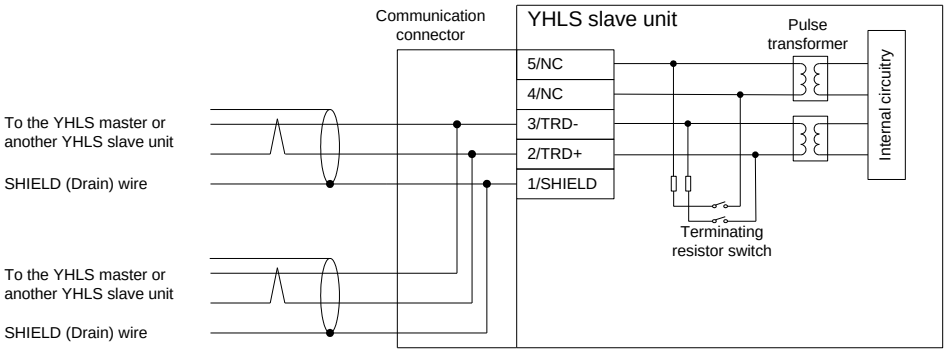

8.2 Power Supply Line

Connect a 24 V DC external power supply to the power supply connector (P24Vin, N24Vin pins).

Use a dedicated 24V DC power supply for the TAH series with an internal noise filter. A ferrite core should be fitted on the power cable.

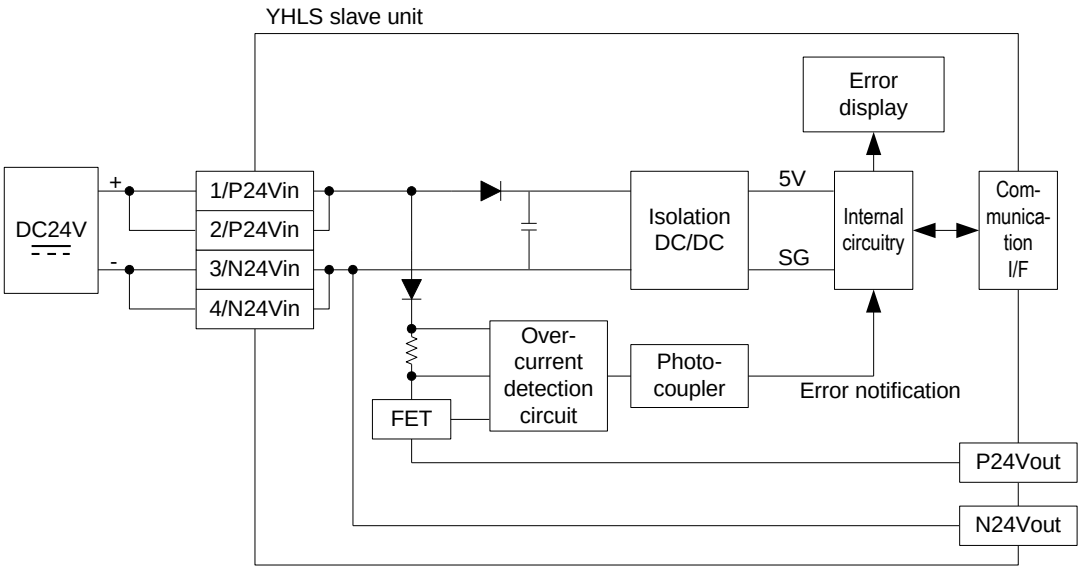

CAUTION

- In a YHLS slave unit, input voltage to the P24Vin and N24Vin pins of the power supply connector is passed through a diode and a short-circuit detection circuit before its output at the P24Vout and N24Vout I/O power supply pins of the I/O interface connector. Beware that incorrect voltage supply to the P24Vin and N24Vin pins of the power supply connector may damage the YHLS slave unit or its connected equipment.
- Never connect an external power supply to the I/O power supply (P24Vout, N24Vout) pins. Doing so may damage the YHLS slave unit or its connected equipment.

CAUTION

- If using this product as a UL-approved product, for the external power supply, use a limited voltage / current circuit power source or a Class 2 power source.
- If using this product as a CE-complied product, for the external power supply, use a SELV and limited-energy circuit separated by reinforced insulation or double insulation from hazardous voltage.

8.3 I/O Circuits

- **Input Circuits**

(1) Positive Common
(TAHWD32-3PAM, TAHXD16-3PEM)

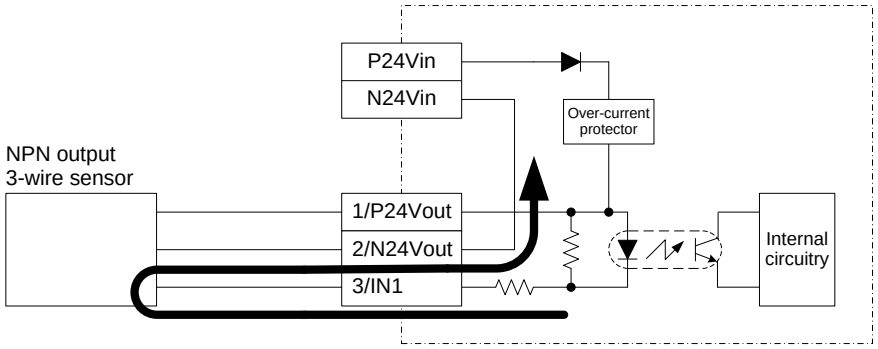

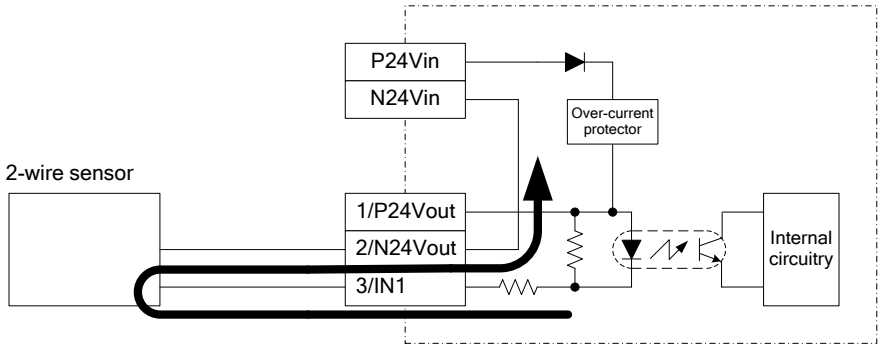

(2) Negative Common
(TAHWD32-3NBM, TAHXD16-3NEM)

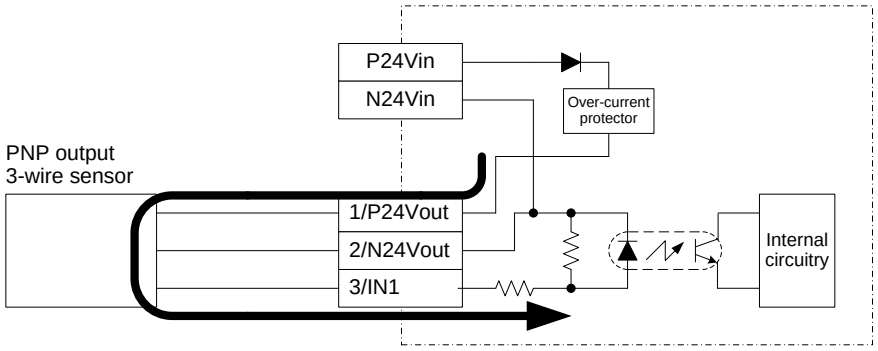

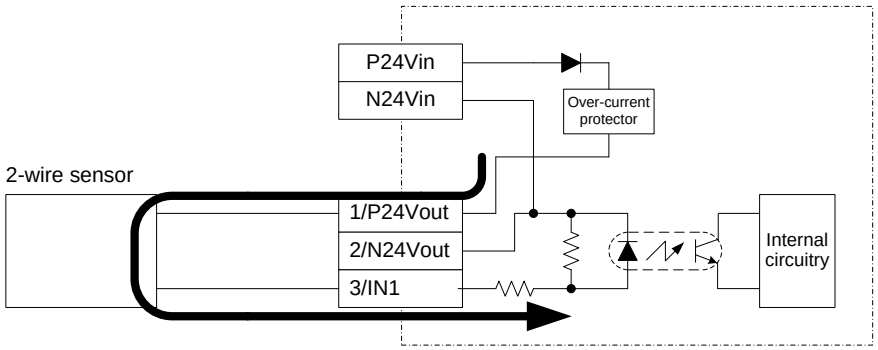

- **Output Circuits**

(1) Sink-type Output
(TAHWD32-3PAM, TAHYD16-3EAM)

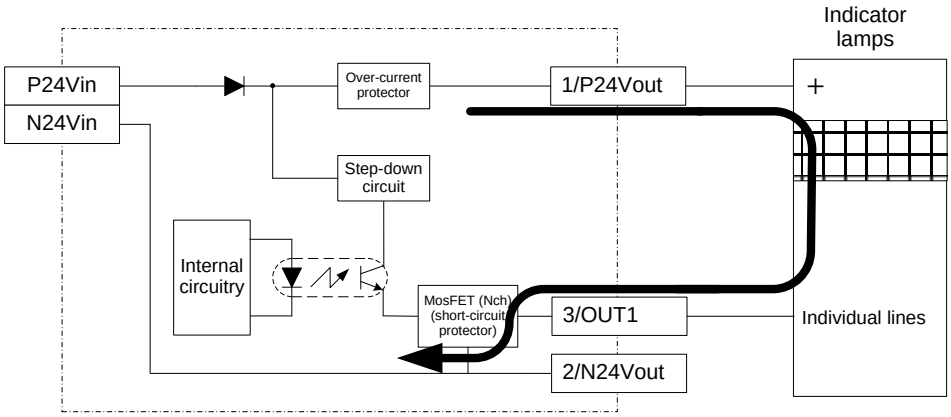

(2) Source-type Output
(TAHWD32-3NBM, TAHYD16-3EBM)

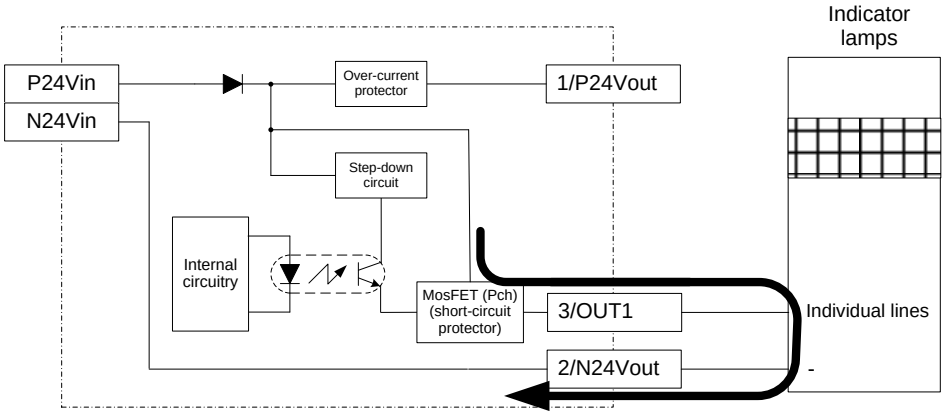

9. Troubleshooting

9.1 Troubleshooting Using LEDs (RDY, LNK, ALM and OCP)

This section describes how to troubleshoot communication failures between the YHLS master module and the YHLS slave units using the LED indicators.

No.	When two or more slave units are connected			When only one slave unit is connected		Causes	Remedies
	Master module	Slave unit normal	Slave unit in error	Master module	Slave unit in error		
1	RDY ● L ● A ○	PWR ● LNK ● ALM ○ OCP ○	PWR ● LNK ● ALM ○ OCP ○	RDY ● L ● A ○	PWR ● LNK ● ALM ○ OCP ○	No cause of error	- Normal. No need of remedy.
2	RDY ● L ● A ○	PWR ● LNK ● ALM ○ OCP ○	PWR ○ LNK ○ ALM ○ OCP ○	RDY ● L ○ A ○	PWR ○ LNK ○ ALM ○ OCP ○	No power to slave unit	- Check the 24 V DC power supply and power cable.
3	RDY ● L ● A ●	PWR ● LNK ● ALM ○ OCP ○	PWR ○ LNK ○ ALM ○ OCP ○	RDY ● L ○ A ●	PWR ○ LNK ○ ALM ○ OCP ○	Communication was once successful but there is now no power to slave unit	- Check the 24 V DC power supply and power cable.
4	RDY ● L ● A ○	PWR ● LNK ● ALM ○ OCP ○	PWR ● LNK ○ ALM ○ OCP ○	RDY ● L ○ A ○	PWR ● LNK ○ ALM ○ OCP ○	Power supply is normal but communication has never been successful.	- Check the FS area, cables, address settings and communication settings.
5	RDY ● L ● A ○	PWR ● LNK ● ALM ○ OCP ●	PWR ● LNK ○ ALM ○ OCP ○	RDY ● L ○ A ○	PWR ● LNK ○ ALM ○ OCP ●	OCP is triggered right after power on and communication has never been successful.	- Remove the cause of overcurrent.
6	RDY ● L ● A ●	PWR ● LNK ● ALM ○ OCP ○	PWR ● LNK ○ ALM ● OCP ○	RDY ● L ○ A ●	PWR ● LNK ○ ALM ● OCP ○	Communication was once successful but now fails.	- Check cables and connectors for loose connection.
7	RDY ● L ● A ●	PWR ● LNK ● ALM ○ OCP ○	PWR ● LNK ● ALM ● OCP ○	RDY ● L ● A ●	PWR ● LNK ● ALM ● OCP ○	Communication is sometimes successful but not reliable over a long period.	- Ensure that the terminating resistor switch on the farthest slave unit on a communications line is on. - Ensure that no more than 32 slave units are connected to each connector on the master module. - Ensure that transmission speed and maximum transmission distance constraints are met. - Ensure that recommended cables are used.
8	RDY ● L ● A ●	PWR ● LNK ● ALM ○ OCP ○	PWR ● LNK ● ALM ○ OCP ○	RDY ● L ● A ●	PWR ● LNK ● ALM ○ OCP ○	Communication is sometimes successful but not reliable even over a short period.	- Ensure that no slave address is duplicated. - Ensure that the terminating resistor switch on the farthest slave unit on a communications line is on. - Ensure that no more than 32 slave units are connected to each connector on the master module. - Ensure that transmission speed and maximum transmission distance constraints are met. - Ensure that recommended cables are used. - Check for excessive noise, and implement noise suppression measures if necessary.
9	RDY ● L ● A ●	PWR ● LNK ● ALM ○ OCP ●	PWR ● LNK ○ ALM ● OCP ●	RDY ● L ○ A ●	PWR ● LNK ○ ALM ● OCP ●	Communication was once successful but the slave was later disconnected by OCP.	- Remove the cause of overcurrent.
10	RDY ● L ○ A ○	PWR ● LNK ○ ALM ● OCP ○	PWR ● LNK ○ ALM ● OCP ○	RDY ● L ○ A ○	PWR ● LNK ○ ALM ● OCP ○	Communication was once successful but the master module is now not accessible.	- Check the RDY, RUN, ALM and ERR LEDs on the CPU module. - Check the RDY LED on the YHLS master module. - Check the user program for its control of the Request to Communicate relay.

Troubleshooting according to the statuses of LEDs on the YHLS master module and slave unit (s).
- When only one slave unit is connected, only one slave unit may be in error.
- When two or more slave units are connected, one or more slave units may be either normal or in error.

● : lit, ○ : not lit

● Timing chart (when two or more slave units are connected)

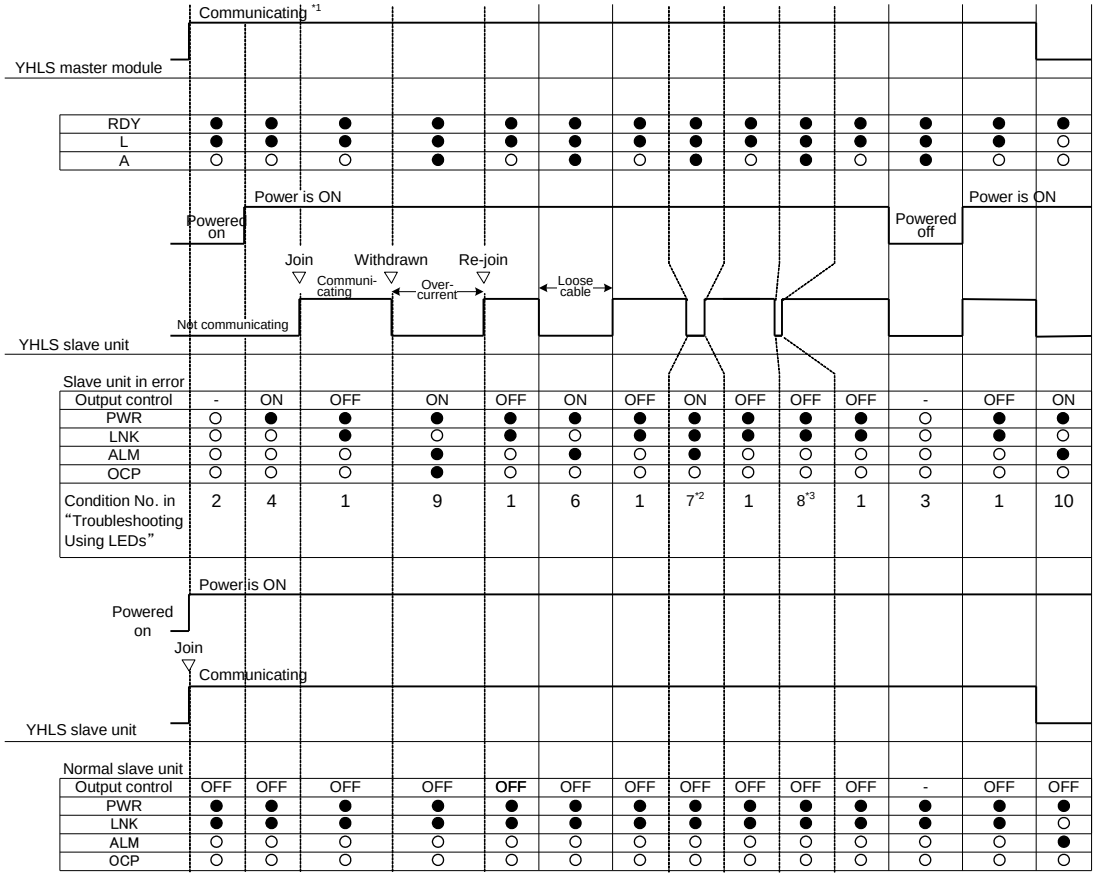

RDY	●	●	●	●	●	●	●	●	●	●	●	●	●	●
L	●	●	●	●	●	●	●	●	●	●	●	●	●	○
A	○	○	○	●	○	●	○	●	○	●	○	●	○	○

Slave unit in error

Output control	-	ON	OFF	ON	OFF	ON	OFF	ON	OFF	OFF	OFF	-	OFF	ON
PWR	○	●	●	●	●	●	●	●	●	●	●	○	●	●
LNK	○	○	●	○	●	○	●	●	●	●	●	○	●	○
ALM	○	○	○	●	○	●	○	●	○	○	○	○	○	●
OCP	○	○	○	●	○	○	○	○	○	○	○	○	○	○
Condition No. in "Troubleshooting Using LEDs"	2	4	1	9	1	6	1	7*2	1	8*3	1	3	1	10

Normal slave unit

Output control	OFF	OFF	OFF	OFF	OFF	OFF	OFF	OFF	OFF	OFF	OFF	-	OFF	OFF
PWR	●	●	●	●	●	●	●	●	●	●	●	●	●	●
LNK	●	●	●	●	●	●	●	●	●	●	●	●	●	○
ALM	○	○	○	○	○	○	○	○	○	○	○	○	○	●
OCP	○	○	○	○	○	○	○	○	○	○	○	○	○	○

*1: X□□□01 (port 1) or X□□□09 (port 2) is ON.
*2: LNK and ALM blink alternately.
Condition No. 5 in "Troubleshooting Using LEDs (RDY, LNK, ALM, and OCP)" above rarely occurs and is thus omitted from this timing chart.
*3: The master module's slave error monitoring latch-type registers can be used to identify the slave unit in error.
●: lit, ○: not lit.

● Timing chart (when only one slave unit is connected)

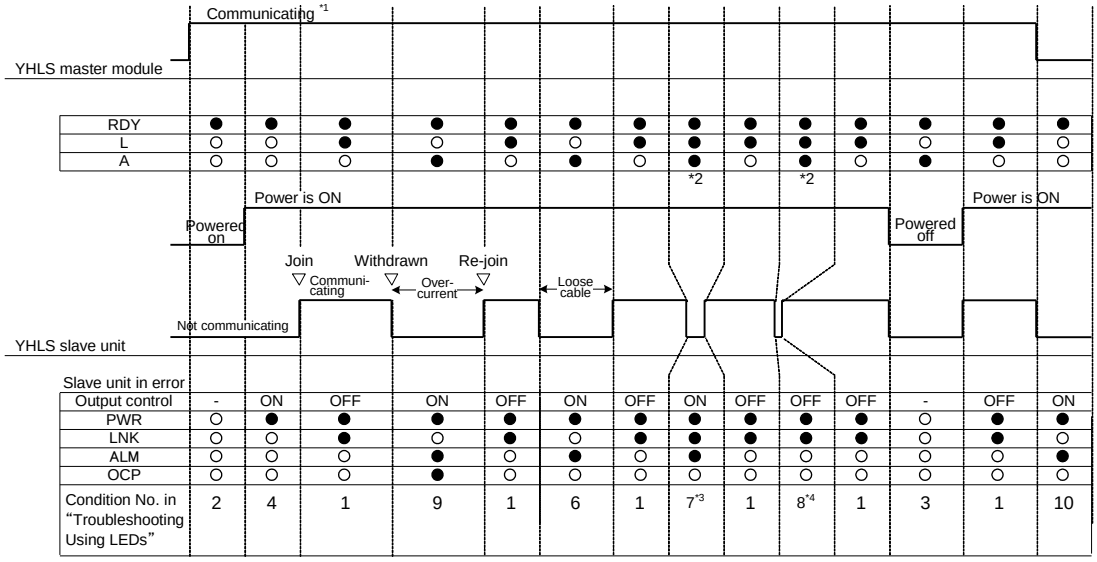

RDY	●	●	●	●	●	●	●	●	●	●	●	●	●	●
L	○	○	●	○	●	○	●	●	●	●	●	○	●	○
A	○	○	○	●	○	●	○	●	○	●	○	●	○	○

Slave unit in error

Output control	-	ON	OFF	ON	OFF	ON	OFF	ON	OFF	OFF	OFF	-	OFF	ON
PWR	○	●	●	●	●	●	●	●	●	●	●	○	●	●
LNK	○	○	●	○	●	○	●	●	●	●	●	○	●	○
ALM	○	○	○	●	○	●	○	●	○	○	○	○	○	●
OCP	○	○	○	●	○	○	○	○	○	○	○	○	○	○
Condition No. in "Troubleshooting Using LEDs"	2	4	1	9	1	6	1	7*3	1	8*4	1	3	1	10

*1: X□□□01 (port 1) or X□□□09 (port 2) is ON.
*2: L and A blink alternately.
*3: LNK and ALM blink alternately.
Condition No. 5 in "Troubleshooting Using LEDs (RDY, LNK, ALM, and OCP)" above rarely occurs and is thus omitted from this timing chart.
*4: The master module's slave error monitoring latch-type registers can be used to identify slave units in error.
●: lit, ○: not lit.

9.2 Troubleshooting Using LEDs (for communication with I/O devices)

● Troubleshooting communication with input devices

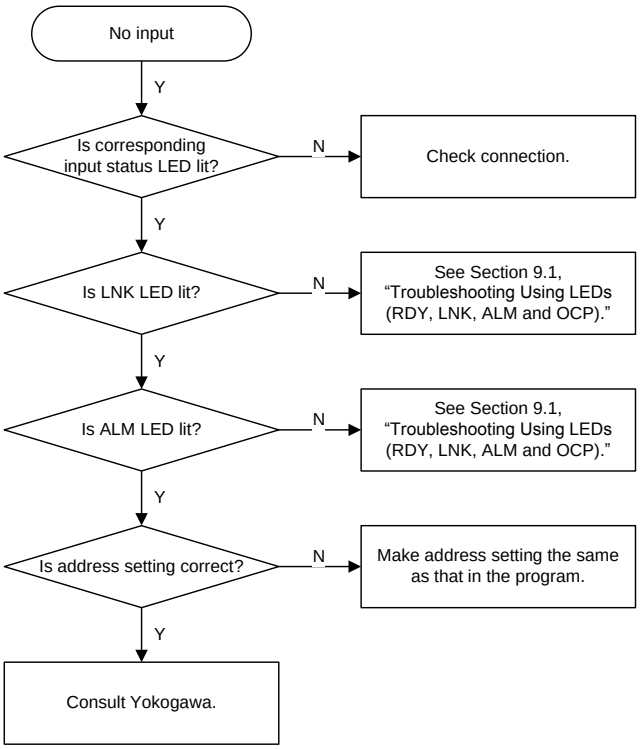

● Troubleshooting communication with output devices

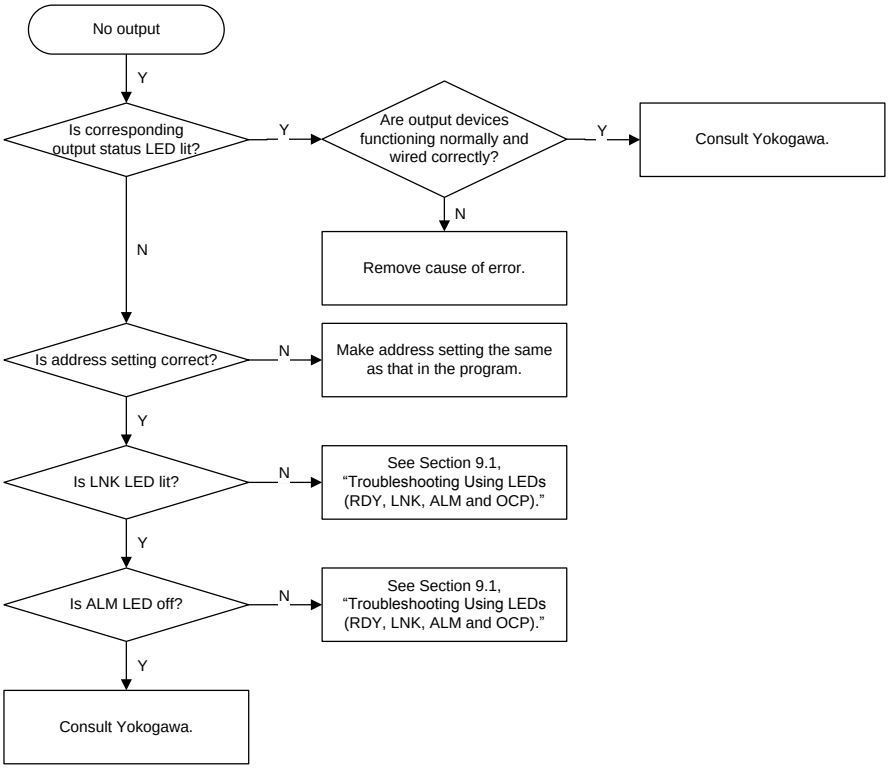

Blank Page

10. Sample Program

10.1 Accessing through YHLS Master Module

The sample program below assumes that the YHLS master module (F3LH02-1N) is installed in slot 4 of the FA-M3 main unit and YHLS slave units are connected to port 1 of the master module as shown in the figure below.

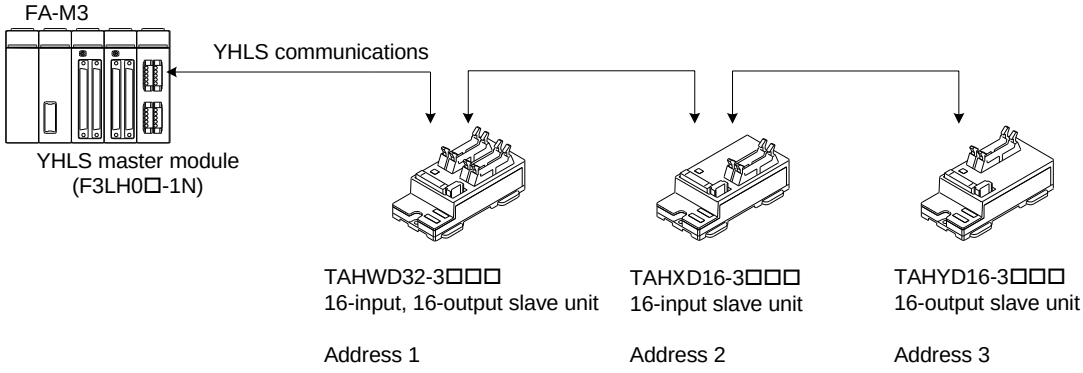

The sample program reads input data from each input slave unit into D registers, and writes output data stored in D registers to each output slave unit.

The program checks the statuses of slave units by reading the Slave Alive List, the Failed Slave List (non-latched) and the Failed Slave List (latched). It clears the Failed Slave List (latched) parameter at the beginning of scanning (on the rising edge of input relay X00401).

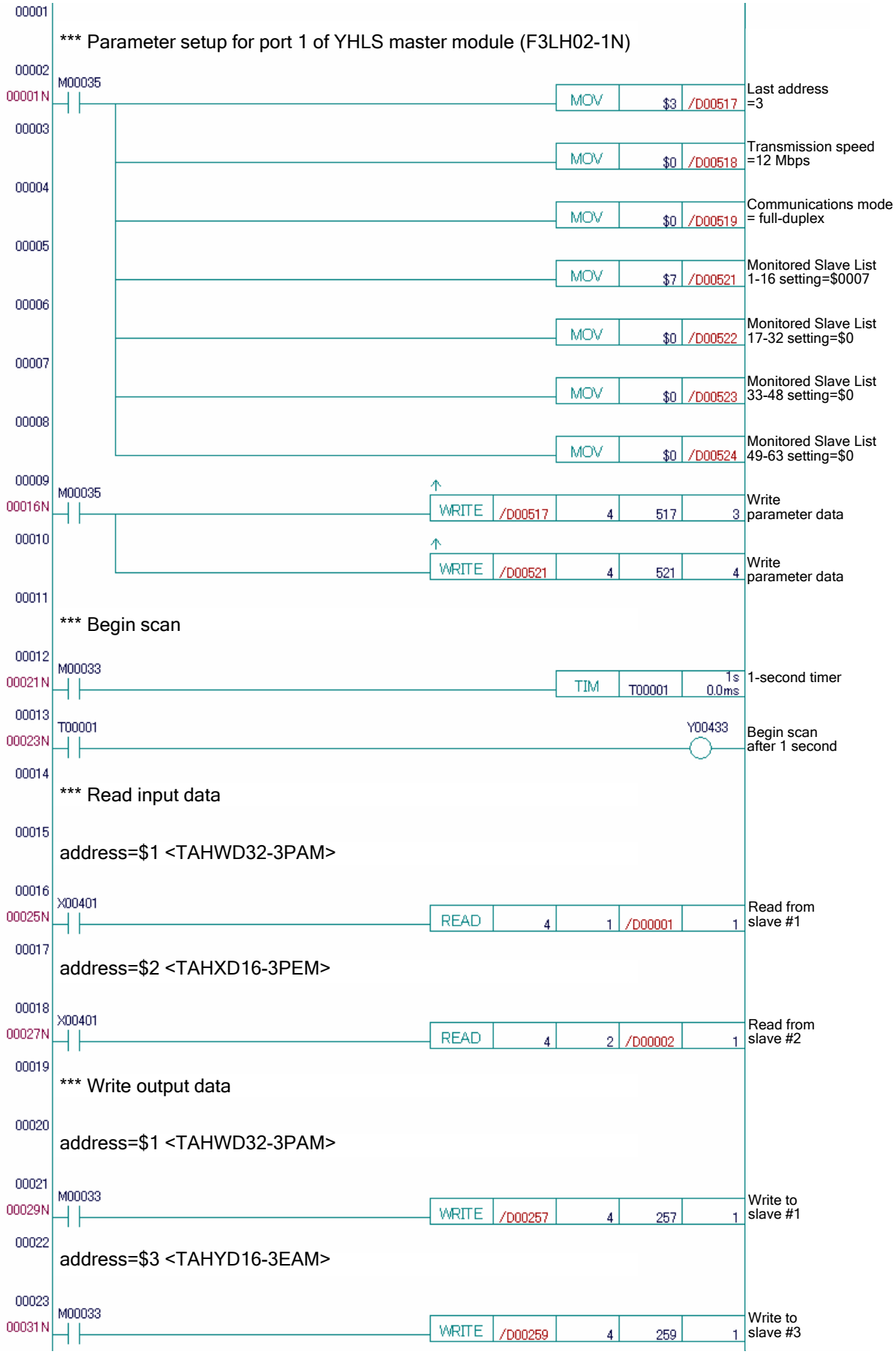
00001
*** Parameter setup for port 1 of YHLS master module (F3LH02-1N)
00002
M00035
00001N
MOV $3 /D00517
Last address =3
00003
MOV $0 /D00518
Transmission speed =12 Mbps
00004
MOV $0 /D00519
Communications mode = full-duplex
00005
MOV $7 /D00521
Monitored Slave List 1-16 setting=$0007
00006
MOV $0 /D00522
Monitored Slave List 17-32 setting=$0
00007
MOV $0 /D00523
Monitored Slave List 33-48 setting=$0
00008
MOV $0 /D00524
Monitored Slave List 49-63 setting=$0
00009
M00035
00016N
WRITE /D00517 4 517 3
Write parameter data
00010
WRITE /D00521 4 521 4
Write parameter data
00011
*** Begin scan
00012
M00033
00021N
TIM T00001 1s 0.0ms
1-second timer
00013
T00001
00023N
Y00433
Begin scan after 1 second
00014
*** Read input data
00015
address=$1 <TAHWD32-3PAM>
00016
X00401
00025N
READ 4 1 /D00001 1
Read from slave #1
00017
address=$2 <TAHXD16-3PEM>
00018
X00401
00027N
READ 4 2 /D00002 1
Read from slave #2
00019
*** Write output data
00020
address=$1 <TAHWD32-3PAM>
00021
M00033
00029N
WRITE /D00257 4 257 1
Write to slave #1
00022
address=$3 <TAHYD16-3EAM>
00023
M00033
00031N
WRITE /D00259 4 259 1
Write to slave #3

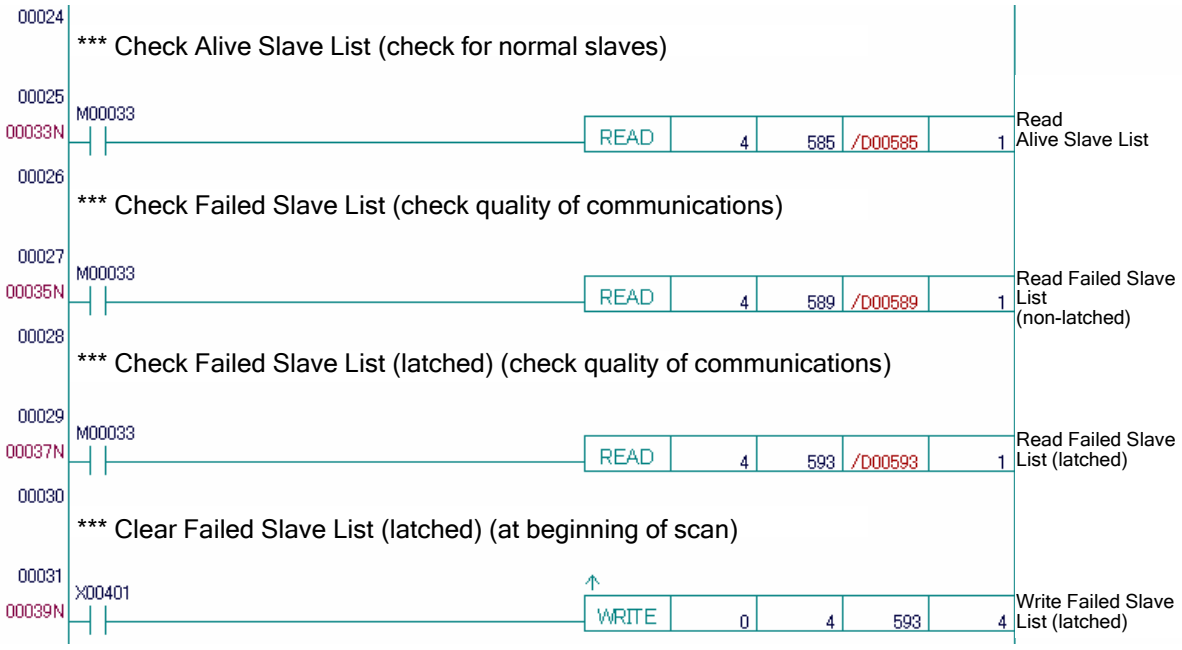
00024
*** Check Alive Slave List (check for normal slaves)
00025
M00033
00033N
READ 4 585 /D00585 1
Read Alive Slave List
00026
*** Check Failed Slave List (check quality of communications)
00027
M00033
00035N
READ 4 589 /D00589 1
Read Failed Slave List (non-latched)
00028
*** Check Failed Slave List (latched) (check quality of communications)
00029
M00033
00037N
READ 4 593 /D00593 1
Read Failed Slave List (latched)
00030
*** Clear Failed Slave List (latched) (at beginning of scan)
00031
X00401
00039N
WRITE 0 4 593 4
Write Failed Slave List (latched)

Blank Page

11. YHLS Communication Cables

■ Model and Suffix Codes

	Model	Suffix Code	Style Code	Option Code	Description
YHLS Fixed Cable	KM80	-010	…	…	Cable length: 10 m
		-050	…	…	Cable length: 50m
		-100	…	…	Cable length: 100 m
		-200	…	…	Cable length: 200 m
		-300	…	…	Cable length: 300 m
YHLS Flexible Cable	KM81	-010	…	…	Cable length: 10 m
		-050	…	…	Cable length: 50 m
		-100	…	…	Cable length: 100 m
		-200	…	…	Cable length: 200 m
		-300	…	…	Cable length: 300 m

■ Cable Specifications

	YHLS Fixed Cable	YHLS Flexible Cable
Model	KM80	KM81
Conductors	2 pairs of 23AWG wires (tin-plated soft-copper braids)	2 pairs of 21AWG wires (soft-copper braids)
Insulation	Polyethylene	
Shields	Aluminum-mylar tape, tin-plated soft-copper braided shield	
Drain wire size	23AWG	22AWG
Outer diameter	Approx. 8.0 mm	Approx. 11.0 mm
Conductor resistance @ 20°C	65.7 Ω/km max.	37.8 Ω/km max.
Dielectric strength (through air)	Withstanding 2000 V AC for one minute	
Insulation resistance	2500 MΩ km min.	
Characteristic impedance @ 1 MHz	100 ± 15 Ω	
Flame retardancy	VW-1 (tested according to UL Subject 758)	
Applicable standards	UL (E107262, E356266), AWM 2464	
Application	YHLS fixed communication cable	YHLS flexible communication cable

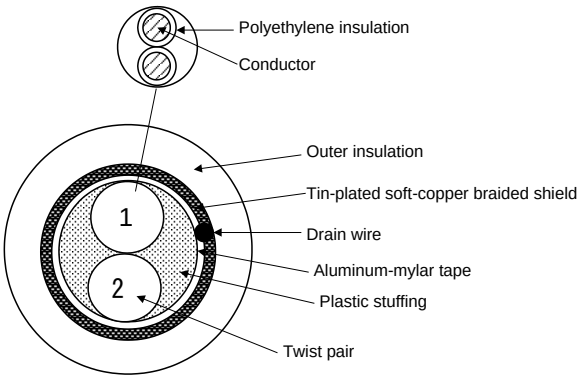

Cross-section of KM80 (fixed cable)

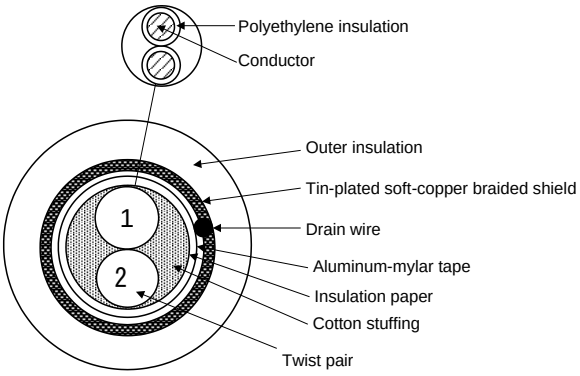

Cross-section of KM81 (flexible cable)

Table 11.1 Wire Assignment for Master Module and Slave Unit (for KM80 and KM81)

Connector Pin No.	Wire Color		Signal name (master module)		Signal Name (slave unit)	
	Full duplex	Half duplex	Full duplex	Half duplex	Full duplex	Half duplex
5	Green	-	TxD -	NC	RxD -	NC
4	Yellow	-	TxD +	NC	RxD +	NC
3	Blue	Blue	RxD -	TRD -	TxD -	TRD -
2	White	White	RxD +	TRD +	TxD +	TRD +
1	Drain	Drain	SHIELD	SHIELD	SHIELD	SHIELD

It is recommended to terminate the cable wires with pin terminals for insertion into a connector. Pin terminals do not come with the cables (see next page for suppliers).

- Pin terminals

Manufacturer: Phoenix Contact

Model: AI 0,34 - 8 TQ (for fixed cable)

AI 0,5 - 10 WH (for flexible cable)

■ Cable Flexibility Performance (for KM81 only)

Test	Test Conditions	Performance
U-bend test simulating the movement of a cable bearer	- Cable bearer bending radius (R) is 50 mm. - Cable bearer stroke is 800 mm. - The cable bearer is moved 28 cycles per minute where one back-and-forth movement is counted as one movement cycle.	Withstanding more than 4 million times of flexing
90-degree bending in both directions	- Mandrel radius (R) is 100 mm. - A load of 1 kg is attached to the lower end of the cable. - The cable is bent 60 times per minute where one time of bending consists of bending and straightening the cable in one direction and then in the opposite direction.	Withstanding more than 10 million times of bending

Note: The above test results are obtained under the specified test conditions, and should not be interpreted as guaranteed values for actual usage in real applications.

■ Usage Precautions for YHLS Fixed Cable (KM80)

CAUTION

- **Minimum bending radius**

  Do not bend the cable beyond the minimum bending radius (see the table below). Otherwise, the cable wires may break or be disconnected from the connector.

Table 11.2 Minimum Bending Radius

Model	Item	Outer Diameter	Minimum Bending Radius	
KM80	Cable	8.0 mm	10 D min. during cable laying	> 80 mm
			4 D min. after installation	> 32 mm
	Wire	1.4 mm	10 D min. during cable laying	> 14 mm
			4 D min. after installation	> 5.5 mm

D = Outer diameter of cable or wire.

During cable laying: This minimum bending radius must be observed throughout cable laying.

After installation: This minimum bending radius must be observed even after cable laying to ensure lifetime performance of the cable.

- **Maximum allowable tension**

  No tensile force exceeding the maximum allowable tensile load should be applied during cable laying to prevent excessive conductor elongation, loose connector, loose wire, open circuit, or performance degradation.

  During cable laying: Never tension the cable beyond its maximum allowable tension during cable laying.
  After installation: Pay attention to cable length and cable securing method and ensure that the cable is not tensioned.

  Maximum allowable tension (N)
  = 7 (kg/mm^2)* x 4 (No. of cable wires) x 0.3 (cross-sectional area of conductor in mm^2) x 9.8
  = 82 (N)
  * Maximum allowable tension of copper conductor = 7 kg/mm^2

- **Exposure to direct sunlight or ultraviolet rays**

  Polyethylene insulation may deteriorate or even crack, thus leading to insulation breakdown, if exposed to direct sunlight or fluorescent light over an extended period of time. If the cable is to be used in such environments, protect the polyethylene insulation with UV-resistant tube or tape (such as black adhesive polyethylene insulation tape).

■ Usage Precautions for YHLS Flexible Cable (KM81)

CAUTION

- **Minimum bending radius**
  Do not bend the cable beyond the minimum bending radius (see the table below). Otherwise, the cable wires may break or be disconnected from the connector.

Table 11.3 Minimum Bending Radius

Model	Item	Outer Diameter	Minimum Bending Radius	
KM81	Cable	11.0 mm	10 D min. during cable laying	> 110 mm
			4 D min. after installation	> 44 mm
	Wire	2.1 mm	10 D min. during cable laying	> 21 mm
			4 D min. after installation	> 8 mm

D = Outer diameter of cable or wire.

During cable laying: This minimum bending radius must be observed throughout cable laying.
After installation: This minimum bending radius must be observed even after cable laying to ensure lifetime performance of the cable.

- **Maximum allowable tension**
  No tensile force exceeding the maximum allowable tensile load should be applied during cable laying to prevent excessive conductor elongation, loose connector, loose wire, open circuit, or performance degradation.

  During cable laying: Never tension the cable beyond its maximum allowable tension during cable laying.
  After installation: Pay attention to cable length and cable securing method and ensure that the cable is not tensioned.

  Maximum allowable tension (N)
  = 7 (kg/mm^2)* x 4 (No. of cable wires) x 0.5(cross-sectional area of conductor in mm^2) x 9.8
  = 137 (N)
  * Maximum allowable tension of copper conductor = 7 kg/mm^2

- **Wiring the cable to moving parts**
  Observe the following precautions when wiring the cable to moving parts:
  (1) If the cable is laid on a cable bearer, secure the cable to the cable bearer only at two points: the entry and exit points. Do not tie cables together using banding band inside the cable bearer. The cable should occupy as little space as possible within the bearer, preferably less than 30%.
  (2) To reduce interference between multiple cables, separate cables using separators and do not stack cables.
  (3) The bending radius of the cable bearer must be at least 10 times the outer diameter of the cable as shown below:

Table 11.4 Bending Radius of Cable Bearer

Cable Model	Outer Diameter	Recommended Bending Radius of Cable Bearer
KM81	11.0 mm	> 110 mm

  (4) If the cable is laid on a cable bearer together with air hoses or other flexible cables, arrange them such that interference is minimized. Do not bind the cable and hoses or other cables using banding band.
  (5) Ensure that the cable is not scratched, twisted, stretched or sagging.
  (6) Similar precautions must also be observed if the cable is wired to moving parts not using a cable bearer. In particular, do not bind the cable and other cables using banding bands.

- **Exposure to direct sunlight or ultraviolet rays**
  Polyethylene insulation may deteriorate or even crack, thus leading to insulation breakdown, if exposed to direct sunlight or fluorescent light over an extended period of time. If the cable is to be used in such environments, protect the polyethylene insulation with UV-resistant tube or tape (such as black adhesive polyethylene insulation tape).

Appendices: Connectors and Cable Preparation

Appendix 1. Connectors

- **For master module**

  - YHLS communication connector

    Manufacturer: Phoenix Contact

    Model: FMC 1,5/5-ST-3,5-RF

- **For slave units**

  - YHLS communication connector

    Manufacturer: Phoenix Contact

    Model: TFKC 2,5/5-STF-5,08 AU

  - Power supply connector

    Manufacturer: Sumitomo 3M Limited

    Model: 38104-0018-000 FL

    Wire size: AWG18 ($0.75mm^2$)

  - I/O connector

    Manufacturer: Hirose Electric Co., Ltd.

    Model: HIF3BA-26D-2.54R (insulation displacement socket)

    HIF3BA-26D-2.54C (crimp socket)

Appendix 2. Cable Preparation

(1) Components and tools

- YHLS communication connector

For master module (example):
Manufacturer: Phoenix Contact
Model: FMC 1,5/5-ST-3,5-RF

For slave units (example):
Manufacturer: Phoenix Contact
Model: TFKC 2,5/5-STF-5,08 AU

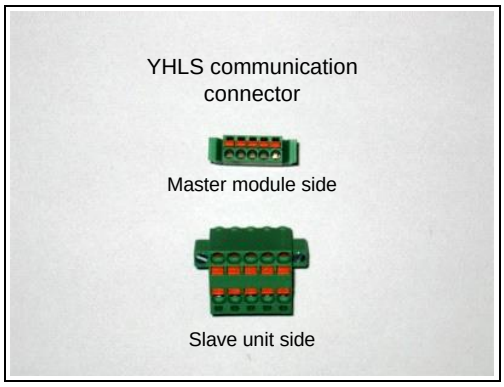

- Insulation tube

For cable insulation and drain insulation (example):
Approx. 8 mm diameter for fixed cable with 22 AWG drain, or
Approx. 11 mm diameter for flexible cable with 22 AWG drain

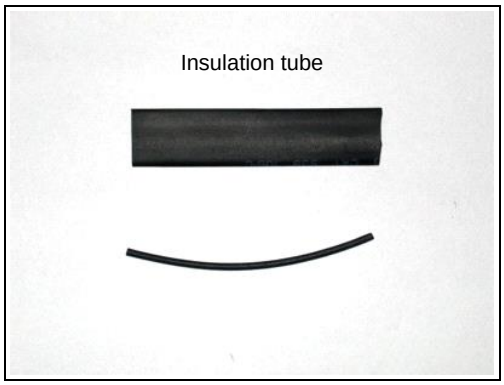

- Pin terminal

For fixed cable (example):
Manufacturer: Phoenix Contact
Model: AI 0,34 – 8 TQ

For flexible cable (example):
Manufacturer: Phoenix Contact
Model: AI 0,5 – 10 WH

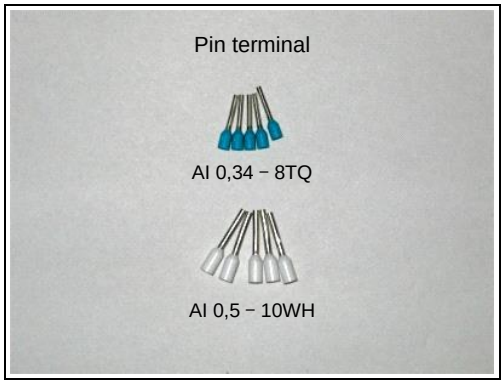

- Pin terminal crimping tool

(Example)
Manufacturer: Phoenix Contact
Model: CRIMPFOX ZA3

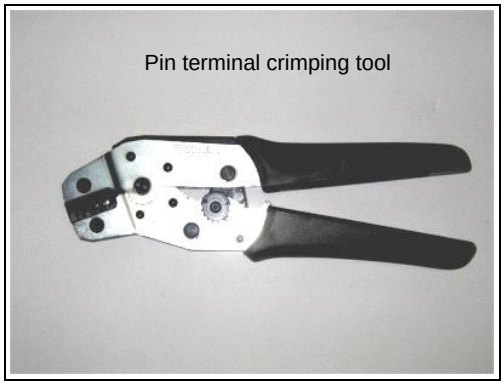

- Wire stripper

(Example 1)
Manufacturer: Hozan Tool Ind. Co., Ltd.
Model: P-90-A (with green handle)

(Example 2)
Manufacturer: Vessel Co., Inc.
Model: 3000A or 3000C
Note: The picture shows wire stripper model P-911 with black handle from Hozan Tool Ind. Model P-90-A has a green handle instead.

Wire stripper

CAUTION

Always use a recommended wire stripper for the KM81 flexible cable. As its wires are fine copper strands, a significant number (or even half) of these strands may be inadvertently cut off during a stripping operation if a non-recommended wire stripper is used.

(2) Preparing a connector-cable set (using a fixed cable and a YHLS communication connector to a master module)

(1) Peel off about 60-mm length of outer vinyl insulation from the cable.

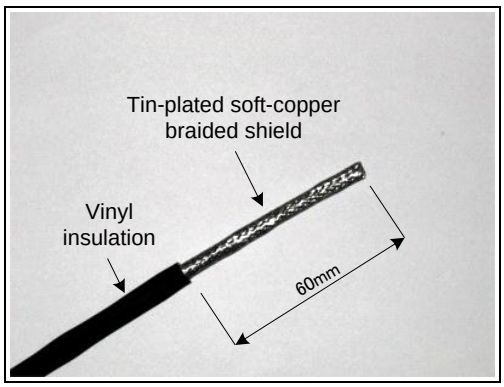

(2) Remove the exposed tin-plated soft-copper braided shield, aluminum-mylar tape, and plastic stuffing. Take care not to damage the exposed drain wire.

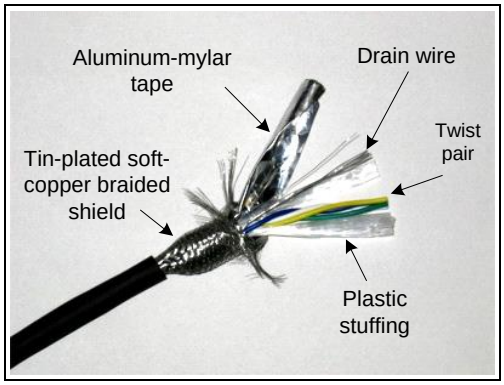

(3) Straighten the exposed twisted wires.

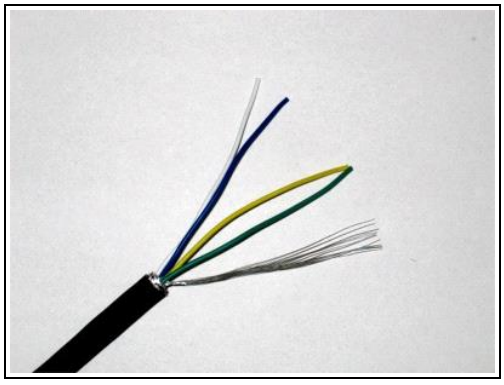

(4) Apply an insulation tube onto the drain wire and shrink the tube with a heat gun.

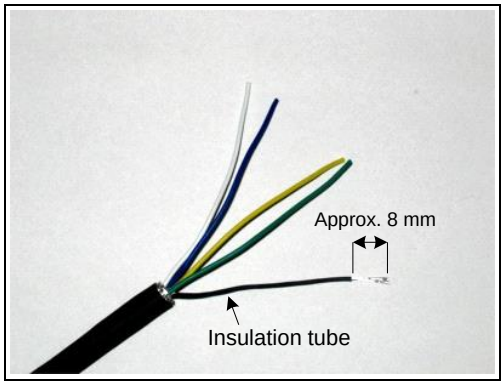

(5) Strip off a sufficient length of the insulation of each wire to allow good electrical contact with a pin terminal. Then put and crimp a pin terminal onto each wire using a crimping tool.

Check that the pin terminal size is compatible with the wire size. Check that each pin terminal is securely crimped to a wire.

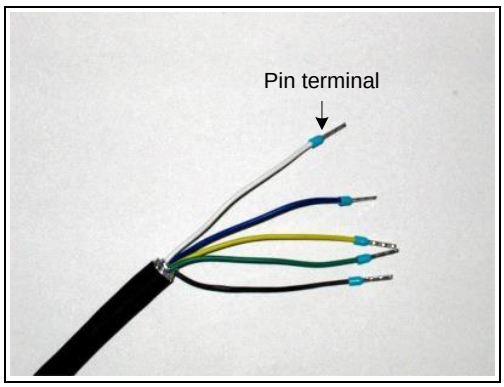

(6) Apply an insulation tube to the cable such that it partially covers both the cable insulation and the exposed wires. Then shrink the tube with a heat gun.

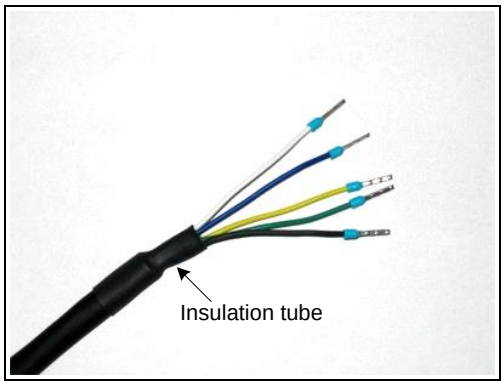

(7) Fully insert each pin terminal into the connector.
Ensure that each pin terminal is securely inserted in the connector.

Pin	Signal Name (master module)		Wire Color (KM8□)	
	Full duplex	Half duplex	Full duplex	Half duplex
5	TxD−	NC	Green	-
4	TxD+	NC	Yellow	-
3	RxD−	TRD−	Blue	Blue
2	RxD+	TRD+	White	White
1	SHIELD	SHIELD	Drain	Drain

Note: The connector-cable set must become a straight-connection type.

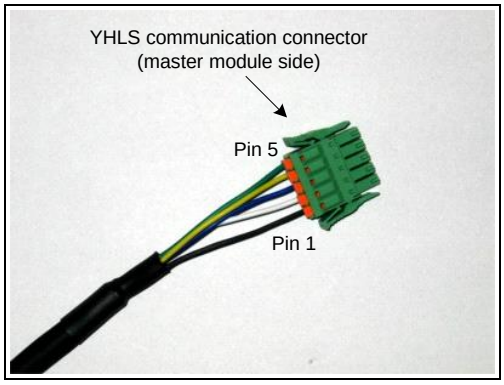

(8) A connector-cable set is completed.

Note: Check the completed connector-cable set for any wrong connection, shorted circuit or open circuit using an ohmmeter or other appropriate instrument.

Note: The connector-cable set preparation procedure is the same for the FMC 1,5/5-ST-3,5-RF connector (for master module) and the TFKC 2,5/5-STF-5,08 AU connector (for slave units). The pictures on the right show the former case.

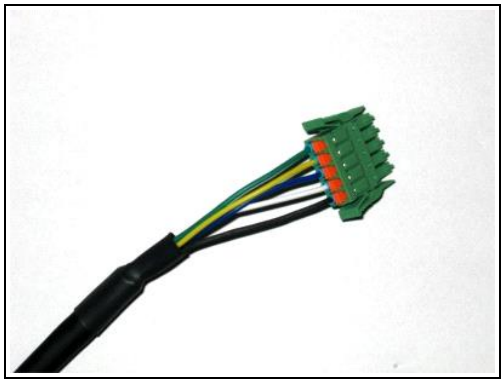

(3) Preparing a connector-cable set (using a flexible cable and a YHLS communication connector to a slave unit)

(1) Peel off about 60-mm length of outer vinyl insulation from the cable.

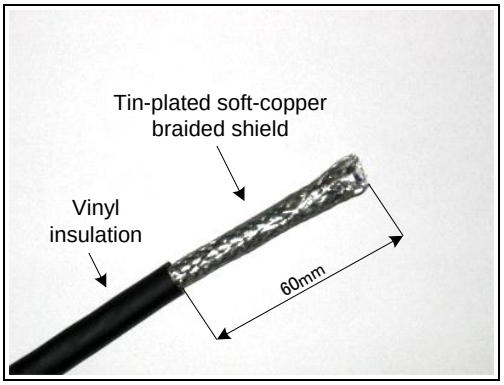

(2) Remove the exposed tin-plated soft-copper braided shield, aluminum-mylar tape, paper insulation, and stuffing. Take care not to damage the exposed drain wire.

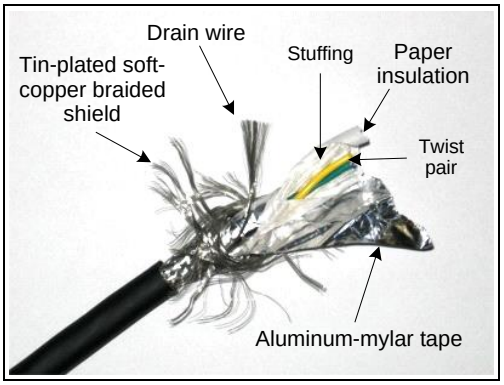

(3) Straighten the exposed twisted wires.

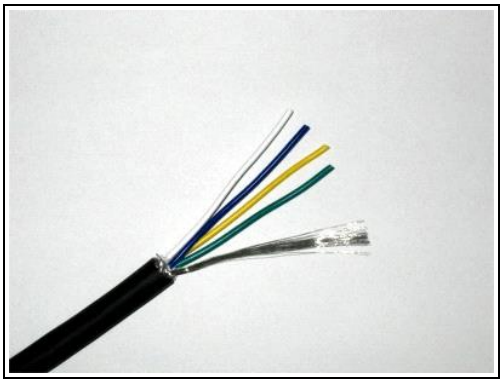

(4) Apply an insulation tube onto the drain wire and shrink the tube with a heat gun.

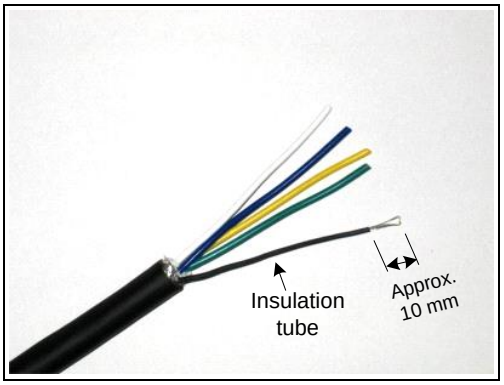

(5) Strip off a sufficient length of the insulation of each wire to allow good electrical contact with a pin terminal. Then put and crimp a pin terminal onto each wire using a crimping tool.

Check that the pin terminal size is compatible with the wire size. Check that each pin terminal is securely crimped to a wire.

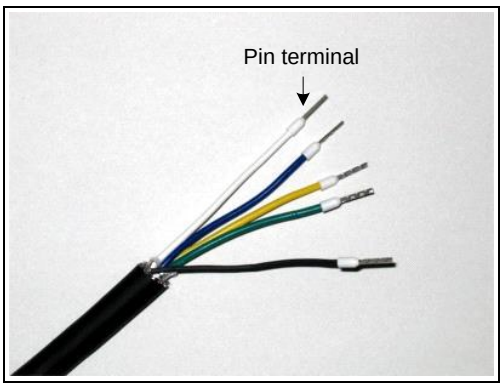

(6) Apply an insulation tube to the cable such that it partially covers both the cable insulation and the exposed wires. Then shrink the tube with a heat gun.

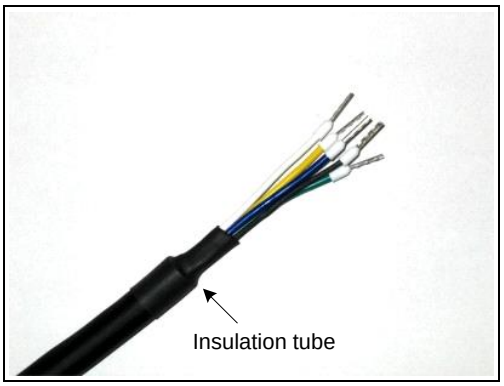

(7) Fully insert each pin terminal into the connector.
Ensure that each pin terminal is securely inserted in the connector.

Pin	Signal Name (slave unit)		Wire Color (KM8□)	
	Full duplex	Half duplex	Full duplex	Half duplex
5	RxD−	NC	Green	-
4	RxD+	NC	Yellow	-
3	TxD−	TRD−	Blue	Blue
2	TxD+	TRD+	White	White
1	SHIELD	SHIELD	Drain	Drain

Note: The connector-cable set must become a straight-connection type.

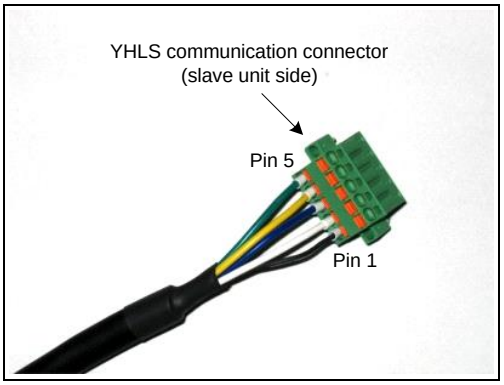

(8) A connector-cable set is completed.

Note: Check the completed connector-cable set for any wrong connection, shorted circuit or open circuit using an ohmmeter or other appropriate instrument.

Note: The connector-cable set preparation procedure is the same for the FMC 1,5/5-ST-3,5-RF connector (for master module) and the TFKC 2,5/5-STF-5,08 AU connector (for slave units). The pictures on the right show the latter case.

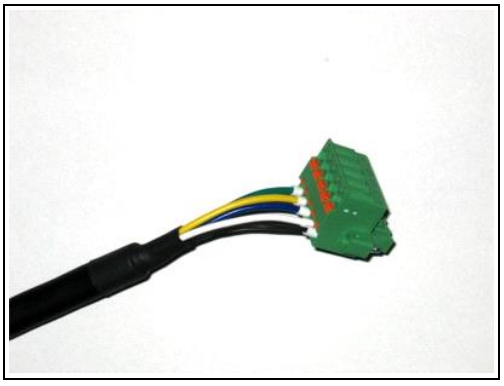

Blank Page

YHLS Slave Units
TAH Series

IM 34M06H46-03E 2nd Edition

Index

A
address switch 4-5, 5-1

C
communications mode..... 1-1, 5-3
constant communication cycle time.....1-2

D
daisy-chain connection 1-2
DIN rail 4-5, 7-4

I
I/O connector 4-2
input and output data areas..... 6-1, 6-2

L
LED indicators 1-2, 4-4, 5-5

M
maximum number of YHLS slave units 3-3
maximum transmission distance 3-2

O
output control function 1-2, 4-4, 5-4
over-current protector for I/O power supply.....1-2

P
power supply connector.....4-2

S
slave unit address..... 3-1, 4-5, 5-1

T
terminating resistor switch 4-5, 5-6
transmission speed..... 1-1, 5-3

Y
YHLS 1-1
YHLS communication cable..... 8-1, 11-1, Appx.-2
YHLS communication connector 4-2, Appx.-1

Blank Page

Revision Information

Document Name : YHLS Slave Units TAH Series
Document No. : IM 34M06H46-03E

Edition	Date	Revised Item
1st	April 2008	New publication
2nd	Dec 2015	Addition of explanation on compliance with EN61010-2- 201.

Written by International Sales & Marketing Gr.
PLC Product Marketing Dept.
IA Systems Business Div.
Industrial Automation Systems Business Headquarters
Yokogawa Electric Corporation
Published by Yokogawa Electric Corporation
2-9-32 Nakacho, Musashino-shi, Tokyo, 180-8750, JAPAN
Printed by Kohoku Publishing & Printing Inc.

Blank Page