ENGINEERING METHODS USING CENTUM CS BATCH PACKAGE —ENGINEERING USING THE APPLICATION TEMPLATE PACKAGE—

SANO Naoki [*1] ***KIBATA Hitoshi*** [*1] ***HAMAGUCHI Nobumasa*** [*1]

In this paper, we introduce the application template package developed using the CS Batch package that runs on CENTUM CS systems. These templates are intended for use in a polymerization plant. This application template package contains software for the typical polymerization plant that includes control applications and documentation such as DCS function specifications, which have been designed and developed from engineering expertise in the field of batch processing. DCS users can easily perform engineering on a batch process using these templates.

INTRODUCTION

The number of work steps involved in engineering a batch process tends to become extremely large compared to continuously controlled processes, if the work is automated using a DCS. This is due to the nature of batch processes and the plants that handle these processes.

The major reasons are:

- Products to be manufactured are quite diverse and variable in quantity. This requires a greater number of sequences to be designed and managed.
- Operators often intervene in the processes at the site (work by hands, such as the manual feed of raw material), requiring sequences to reflect this.
- Processing against abnormalities, such as interruption or resumption, should be considered by users and plants respectively, and therefore requires sequences to reflect this.
- Even the one user employs different operating methods or topologies from plant to plant. This makes it difficult to standardize plant operations as operating methods must be reviewed each time a plant is put in operation in order to determine the operating specifications suitable for that particular plant.

Yokogawa has been engineering batch processes for a long time, ever since it launched its DCS's on to the market. This engineering work, however, has always involved an excessive increase in the work steps noted earlier. The factors contributing to this increase in work steps have annoyed engineers of Yokogawa and similar vendors and customers' engineers assigned to that work, as they search for ways to do engineering work efficiently in a short time. The template package described in this paper has been developed with this in mind, that is, to provide a way to improve efficiency in engineering batch processes.

STANDARDIZATION OF BATCH APPLICATIONS

Among the international standards currently available, the ISA-SP88[(1)] is designed to standardize batch systems. Since 1994, Yokogawa has been offering the CS Batch package[(2)], a software package for batch processes, which complies with ISA-SP88.01. The application template for polymerization plants introduced in this paper has been created using the CS Batch package for CENTUM CS based on the ISA-SP88.01.

*1 Industrial Automation Systems Business Division.

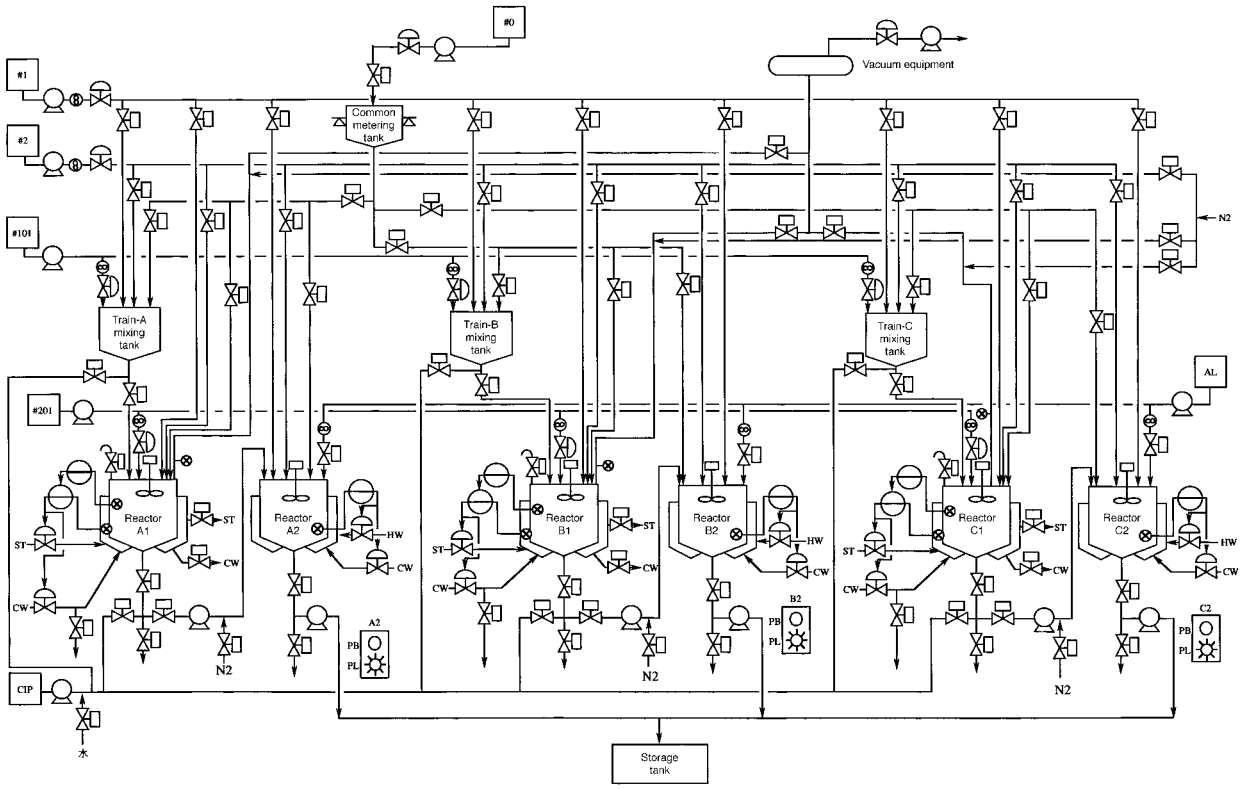

Figure 1 Process Carried Out by Polymerization-process Templates

BASIS OF TEMPLATE DEVELOPMENT

The main issues for engineering that should be considered when designing batch-process applications, are as follows:

- The scope of automation. What type of functions should be developed and added to the control of a DCS?
- On what basis should the applications be operated, and how?
- How should the statuses, modes and phases be defined and isolated from each other in their respective categories?
- To what extent should the processing of sequences against anomalies, such as interruption and resumption, be automated, and how?
- How should recipes be defined (in terms of recipe management, data assignment, isolation between phases, etc.)?
- What considerations should be made for future retrofits and/or system enhancements?

To achieve success in engineering batch processes, we must study all of the points above thoroughly, coordinate them with each other, and then satisfy all of the function requirements. However, reviewing all of these subjects from scratch and making decisions within a short time is not an easy task. Furthermore, the more one considers how to develop such applications, the more difficult the subjects are to cope with in a short time and in an efficient manner. Templates are to be developed so that they will help users make decisions on a pile of subjects and bring their applications into perfection in a reduced lead time. Using the application templates discussed here, users can:

- reduce the lead time needed to determine their function specifications.
- standardize the function specifications.
- reduce the time required to design, produce and inspect their applications.
- improve the quality of their applications.

DETAILS ON POLYMERIZATION-PROCESS TEMPLATES

Application templates come in a number of different types, which vary according to the particular process or industry in which they are used. The templates introduced here are those developed for polymerization processes.

Overview of Polymerization-process Templates

Figure 1 illustrates the process carried out by the polymerization-process templates.

Overview of the Process

- This process represents a polymerization plant consisting of trains A, B and C.
- Each train undertakes multi-stage polymerization in a configuration comprising one mixing tank and two reactors connected in series.

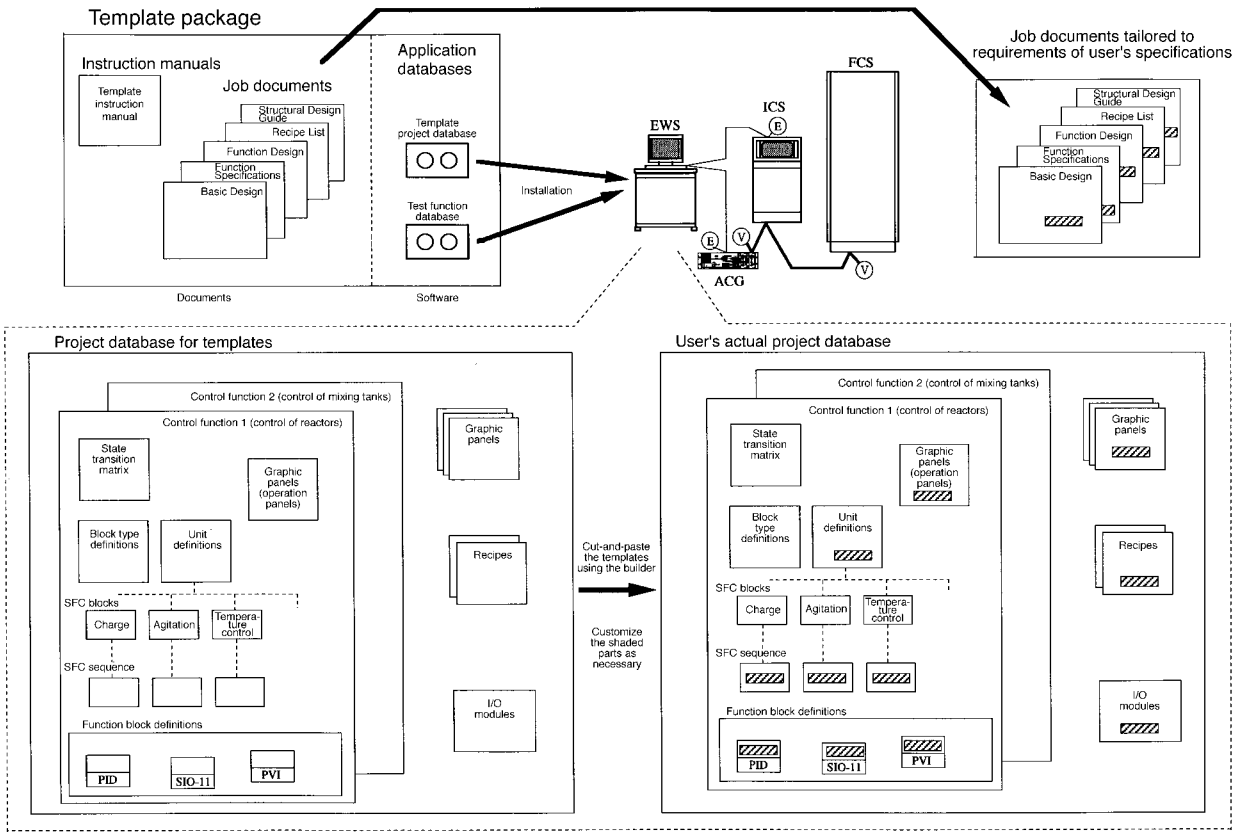

Figure 2 Schematic Representation of Engineering Using Templates

- These three trains share the same functionality.
- The finished products are transferred from the final-stage reactors (reactors A2, B2 and C2) to the storage tank.
- Reactors A1, B1 and C1 are controlled for their internal, external or internal/external temperatures.
- Reactors A2, B2 and C2 are controlled for their internal temperature only.
- Reactors A1, B1 and C1 are evacuated by the vacuum equipment and pressurized with nitrogen gas.
- Reactors A1, B1 and C1 receive material from the mixing tanks dedicated to their respective trains.
- Reactors A2, B2 and C2 are equipped with lamps and push-buttons used to signal instructions and acknowledgments about on-site manual work.
- All reactors undergo a cleaning-in-place (CIP) process where they are cleaned from their top down.
- The common metering tank performs subtraction metering on the load cells so as to feed raw material #0 to the respective reactors and mixing tanks of the trains.

Control Functions

The control functions are summarized by their control destination:

- Reactors
- Mixing tanks
- Common metering tank
- Material-feed equipment
- Vacuum equipment
- CIP equipment

Documents Provided as Templates

The polymerization-process template package provides the following specifications documents as a vendor presents to a user in actual projects:

- DCS System Basic Design
- DCS System Function Specifications
- DCS System Function Design
- Recipe List
- Structural Design Guide

  In addition, the following documents are supplied as instruction manuals for the template package itself.
- CS Batch Polymerization-process Template instruction manual—Engineering
- CS Batch Polymerization-process Template instruction manual—Operating Environment

Software Provided as Templates

- A set of applications created as templates
- A set of databases for test functions

Operating Environments

The operating environment when the package is operated on a

target system is as follows:

EWS: one unit; ICS: two units (one unit acceptable); FCS: one unit; ACG: one unit

The operating environment when the package is operated on an FCS simulator is as follows:

EWS: one unit

ENGINEERING PROCEDURE

The templates discussed in this paper have been designed to perform all of the engineering work. Users can carry out engineering efficiently using the templates as instructed below.

Using Templates to Learn About CS Batch-Based Engineering

Before actually starting engineering work, operators should install the software package in a system and check the behavior of the CS Batch. By doing this, operators can learn what CS Batch is and how it operates and figure out how to work with it on an ICS.

Operators should use the job documents of engineering work required as references to show how necessary specifications should be summarized and what documents should be prepared prior to the engineering work.

Checking Templates to Identify Applicable Functions and Determine Specifications

The templates are the result of actual engineering carried out at a polymerization plant that Yokogawa considered to be a realistic example. The plant therefore is not completely identical to users' plants in terms of the specifications. The following procedure should be followed to make the best use of the templates when specifications are determined at a user's plant.

- Incorporate the design concepts of these templates (such as the way units are grouped and operating methods) wherever possible to summarize the specifications.
- Use the functions provided by the templates, as appropriate.
- If there is a function required that is not covered by any of those in the templates, customize the function in the templates that best resembles the required function.

Copying Necessary Items of Software

A standard builder is used to copy necessary templates to an actual project on an EWS. To do this:

- Install the template package in the EWS.
- Register the project to be engineered by the user.
- Open both projects using the builder and cut-and-paste parts that are necessary to build a user project.

SCHEMATIC REPRESENTATION OF ENGINEERING

Figure 2 is the schematic representation of engineering work done using the templates in a practical application. The job documents provided in the template package are given functional corrections and additional parts in order to tailor the package and satisfy the user's requirements. When the user's specifications are fixed, the software package is installed in the EWS. Then, the templates are cut-and-pasted to a predefined actual user project using a builder. Parts requiring customization (differences from the supplied templates) are created separately to be tested for performance.

CONCLUDING REMARKS

Users can adopt these template-based engineering methods to do engineering more efficiently in a shorter period of time than they do using the conventional methods. In addition, users who perform engineering work on a CS Batch-based system for the first time, can learn the system as they are learning the engineering methods. We are also planning to create templates for other processes (for example, pneumatic-transfer processes), besides the polymerization process. ◆

REFERENCES

(1) Sakamoto, H. "Global Standardization of Batch Systems—SP88; Background and Overview," Instrumentation and Control Engineering ("Keiso" in Japanese), vol. 38, no. 10, 1995, p. 61-63

(2) Motoyoshi, S. "Batch Control Packages Based on ISA-SP88," Instrumentation and Control Engineering ("Keiso" in Japanese), vol. 38, no. 10, 1995, p. 39-43

(3) Sakamoto, H. and Kano, T. "SP88 and CS Batch," Yokogawa Technical Report, no. 21, 1996, p. 1-4