5G Wireless Communication for Driving Digitalization in the Process Industry

Hideo Nishimura [*1] *Shuji Yamamoto* [*2]

The fifth-generation mobile communication system (5G) has been developed not only for consumer use but also as a fundamental communication infrastructure for various industries. The importance of wireless technology is becoming increasingly recognized in the process industry; this technology enables devices in the plant field to be connected wherever they are, which is also essential to accelerate digitalization and improve productivity. To drive digitalization using 5G technology, Yokogawa has been actively involved in the standardization of the technology while working on proof-of-concept tests to clarify use cases in the process industry. From the viewpoint of how the process industry utilizes 5G for digitalization, this paper overviews 5G technology, its potential use cases, and challenges in practical use and describes Yokogawa's commitments.

INTRODUCTION

Wireless communication is used for many applications in the process industry, contributing to stable and efficient plant operation. For example, ISA100.11a is a highly reliable industrial wireless standard, and its compliant devices are used for a wide range of applications from process monitoring to control. Low-power wide-area (LPWA), which is characterized by power-saving and long-range communication, is used for asset monitoring and other applications. Wireless communication is also used in the field to connect mobile devices such as tablet devices, helping to improve the efficiency of field operations.

*1 Technology Marketing Department 2,
External Affairs and Technology Marketing Center,
Marketing Headquarters
*2 External Affairs and Technology Marketing Center,
Marketing Headquarters

The process industry and other manufacturing industries are introducing digital technology to improve productivity further. As one of its core technologies, wireless communication, which enables communication regardless of location, is becoming increasingly important. Meanwhile, the requirements for wireless communication to achieve diverse wireless applications are becoming more challenging. For example, to support field workers, stable connectivity must be ensured across the plant. To more precisely control robots that move around, reliability and real-time interaction are required. Furthermore, to achieve autonomous plant operation using AI, huge numbers of sensors are deployed in the field. High-capacity communication is required to connect these sensors, quickly collect a large amount of data, and feed them to AI.

This paper focuses on the 5th generation mobile communication system (5G) as the most advanced wireless technology to meet the advanced communication requirements, outlines the technology, and discusses potential 5G use cases in the process industry and the challenges in practical applications. As efforts to solve the issues, we

will also introduce Yokogawa's proof-of-concept test and commitment to international standardization regarding the industrial use of 5G.

OVERVIEW OF 5G TECHNOLOGY

Communication Characteristics

"5G" stands for the 5th generation of mobile communication systems following 3G and 4G/LTE. While the previous generations were developed primarily for communication services for people, 5G is being developed to be also used as a network infrastructure for the Internet of Things (IoT) era, which will connect all devices and objects not only for daily life but also for industry. As shown in Figure 1, the International Telecommunication Union's Radio Communications Sector (ITU-R) defines three communication characteristics for 5G: enhanced mobile broadband, ultra-reliable and low latency communications, and massive machine-type communications[1]. The following sections describe the performance requirements for each communication characteristic. Note that it is not required to satisfy all requirements at the same time; for example, simultaneous connection of one million terminals with 20 Gbps high-speed communication is not required.

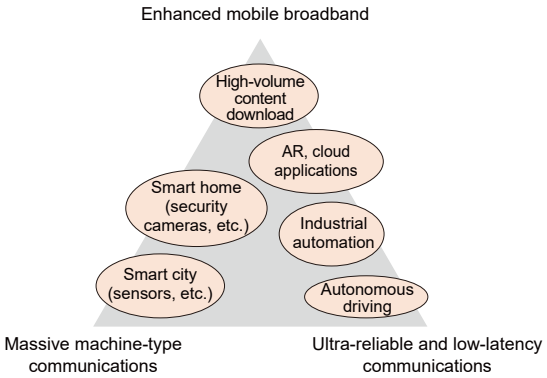

Figure 1 Three communication characteristics of 5G and applications

Enhanced mobile broadband

5G focuses on increasing the data throughput of broadband wireless communications, which have been continuously enhanced in previous generations. Broadband services for smartphones and other mobile terminals are a typical example of applications that take advantage of this characteristic. The requirements include a communication speed of up to 20 Gbps and stable communication bandwidth of about 100 Mbps to users in the area.

Ultra-reliable and low-latency communications

5G aims to achieve both high reliability and low latency, enabling real-time wireless communication. This characteristic is mainly intended for mission-critical industrial applications, such as production control, remote surgery, and smart grids. The requirements include an over-the-air latency of 1 ms or less and a packet reception success rate of 99.999% or higher.

Massive machine-type communications

This characteristic means connecting a large number of terminals with low communication volume simultaneously. Applications with large numbers of battery-powered inexpensive devices such as IoT sensors are assumed. The requirements include the ability to accommodate more than 1 million terminals per km^2, and excellent power-saving, battery-powered operation for more than 10 years.

Exclusive Use of Spectrum

Most of the existing wireless communication technologies, such as Wi-Fi and ISA100.11a, use unlicensed spectrum (e.g., 2.4 GHz band), which does not require users to obtain a license. This unlicensed spectrum is used for a variety of purposes for unlimited numbers of users. However, there is a risk of interference from other wireless systems on the same frequency. On the other hand, 5G and other mobile communication systems generally use licensed spectrum that can be occupied only by licensees and are less susceptible to radio interference from other systems, achieving more stable wireless communication. Since stable communication is crucial in industrial applications, exclusive use of spectrum is one of the differentiating factors of 5G wireless technology from other wireless technologies on unlicensed spectrum.

Frequency bands allocated to 5G vary from country to country and region to region, but the sub-6 and millimeter-wave bands are expected to be used.

- Sub-6 (less than 6 GHz)
  This frequency band has an excellent balance of coverage area and communication capacity. In Japan, the 3.7 GHz and 4.5 GHz bands are allocated.
- Millimeter wave (24 GHz and higher)
  Due to high directionality, this high-frequency radio wave cannot easily go around obstacles but can provide higher communication capacity using a wide bandwidth. In Japan, the 28 GHz band has been allocated.

Operating Private Networks (Local 5G)

Existing mobile communication systems were designed to provide wide-range communication services through a nationwide network built by mobile network operators (MNO). On the other hand, 5G is also expected to allow non-telecom operators (e.g., plant operators) to build and operate private 5G networks, like wireless LANs, in limited areas. Private networks not only can flexibly customize communication performance depending on the application but also are suitable for applications that require high security and stability because they are independent from other networks and users[2].

In Japan's local 5G system[3], companies and local governments are expected to build and operate their own private 5G networks, called local 5G, within their own premises. Table 1 compares the main features of nationwide carrier 5G and local 5G. Apart from the frequency bands allocated to the MNOs, sub-6 (4.5 GHz band) and millimeter wave frequency bands are allocated to local 5G. After obtaining a license, local operators can make exclusive use of these frequency bands within their premises.

Table 1 Features of carrier 5G and local 5G

	Carrier 5G	Local 5G
Network operators	Mobile network operators (MNO)	Non-MNO users (companies, local governments, etc.)
Communication area	Nationwide (but service area depends on MNO)	Can be built within owned buildings and premises
Licensee	MNOs	User of a local 5G network
Interference from other users	Yes (e.g., congestion during disasters)	None (no other users in a local 5G network)
Customization	None in principle (priority placed on downlink)	Possible (e.g., increasing uplink capacity)
Security	Security must be implemented on condition of being connected to the public network.	Easier to implement security of an isolated private network

5G IN THE PROCESS INDUSTRY

Potential Use Cases

In the manufacturing industry, there are various wireless applications with different requirements for communication characteristics, such as remote monitoring of assets, process monitoring and control, connection of mobile terminals for field workers, and operation of robots in the field. As explained in the Section "Communication Characteristics," 5G has various communication characteristics and is expected to be used as a wireless infrastructure that enables various wireless applications to be introduced in plants. In addition, applications that make the most of 5G's communication characteristics are being developed to promote digitalized remote operations in the manufacturing industry. Figure 2 shows potential 5G use cases in a plant.

On-site operation support with mobile devices

Mobile devices are increasingly used to improve the efficiency of on-site work such as patrol and inspection of plant facilities. Currently, limitations of network coverage and bandwidth in the field impose constraints on work support applications via wireless communications. 5G will allow broadband wireless communication anywhere in the plant with higher speed and lower latency.

Augmented reality (AR) is one of the use cases of 5G's enhanced mobile broadband. Although it requires large amounts of data, AR can offer intuitive solutions by overlaying high-definition images on the equipment to be worked on and displaying them together on workers' tablet devices or wearable terminals (e.g., smart glasses) in real time. Field workers can operate the target equipment while referring to the overlaid work procedures or share the live image in real time with skilled persons in a remote location and receive specific advice. This use case is expected not only to reduce human resources required for field work but also to transfer skills more efficiently through practice.

Remote monitoring with high-definition images

5G has larger capacity than the previous generation of 4G/LTE, especially in upstream communication, which enables high-resolution videos of 4K or higher to be transmitted in real time. One potential use case in plants is remote monitoring with wireless cameras. When the definition of images is high enough to distinguish a subtle change in color of a liquid surface or corrosion of pipes, visual inspection can be performed remotely, thus saving labor. High-resolution images can also be used as an input to AI to automatically detect abnormal conditions (e.g., intrusion of unauthorized persons, outbreak of fire).

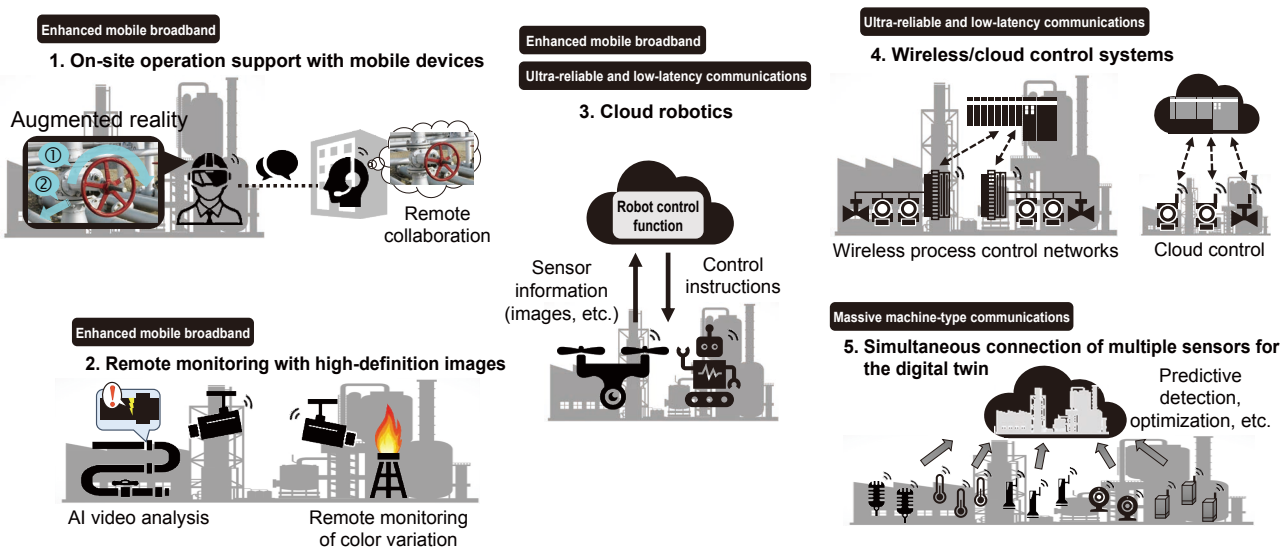

Figure 2 Potential 5G use cases in plants

Cloud robotics

As the working population decreases, robots are expected to ensure the safe and stable operation of factories, and to be used for tasks that involve working at heights and in dangerous places. Mobile robots move autonomously around the plant and perform inspections and other tasks in place of workers, thereby reducing personal injury and labor. One promising method is cloud robotics. The control function in the cloud is not restricted by the computational performance of the robot, enabling advanced control.

By taking advantage of its high speed and large capacity, 5G will enable mobile robots to be wirelessly connected to the control function in the cloud in real time. By using the ample computational resources available in the cloud and processing a sufficient amount of sensor data (camera images, location data, etc.) obtained from the robot in real time, it will be possible to perform more precise situation analysis and control. Ultra-reliable and low-latency communications of 5G can be used for highly urgent communications to avoid collisions and other serious incidents.

Wireless/cloud control systems

High reliability and low latency cannot be achieved at the same time by existing wireless technologies, but will be possible with 5G. Thanks to this new communication characteristic, 5G is expected to be used in mission-critical applications. One possible usage is to make a part of the distributed control system (DCS) network wireless in order to reduce the cost of laying and maintaining communication cables in the vast area of a plant. Monitoring points can be added and changed flexibly without any work on communication cables.

Furthermore, since 5G ensures high-reliability, low-latency communications between field devices and the cloud, the controller and some other functions of the DCS can be placed in the cloud while maintaining the mission-critical performance. In addition to external cloud systems, 5G is expected to be used with multi-access edge computing (MEC), which builds a low-latency computing platform in the network. When control applications are implemented on the MEC platform, it is expected to enable cloud control services that make full use of the high reliability and low latency of 5G, without need for the Internet or other networks.

Simultaneous connection of multiple sensors for the digital twin

The digital twin is a technology for reproducing a digital counterpart of a real plant in cyberspace and is used as a basis for achieving digital transformation of plant operations. Its usage is not limited to static digital design information of the plant. The digital twin is expected to reflect real-world plant conditions in real time and to be used for predictive maintenance and optimization of operations through simulation and AI analysis. To synchronize the status of the physical plant and the digital twin more precisely, it is necessary to accurately grasp the status of equipment, piping, and other assets as well as weather and other environmental conditions. Therefore, a sufficient number of sensors must be installed in the plant. To satisfy this requirement, each sensor must be wireless, inexpensive, and run for several years without replacing the battery. 5G's feature of simultaneous connection of multiple devices is useful for this application.

Current Status and Challenges of Industrial 5G Application

The previous section described potential use cases of 5G in plants. At present, however, 5G has not yet been actively implemented in the process industry and other industries. This section describes the challenges in introducing 5G in plants.

Maturity of 5G capabilities for industry

As discussed in the Section "Overview of 5G Technology," 5G must support a variety of features covering both consumer and industrial applications. Therefore, 5G standards are being developed in a prioritized, phased manner. The first 5G standard, 3GPP Release 15, was published in 2018, focusing on supporting enhanced mobile broadband for consumers. As of July 2021, most 5G networks are compliant with Release 15. Conversely, however, this means that 5G applications today have yet to make full use of the potential of 5G but are limited to enhanced mobile broadband characteristics.

Release 16 and later standards include functions that can be used for full-scale industrial applications. Specifically, they not only enhance high-reliability, low-latency communications, and private networks, but also support interoperability with time-sensitive networking (TSN), a fundamental network technology in the field of automation. Although Release 16 was published in July 2020, compliant products are not widely available in industrial markets as of July 2021. Functions for industrial use will be enhanced in Release 17 (to be published in 2022) and in Release 18 and later (5G-Advanced) standards. 5G has various advanced features for industrial use such as high reliability, low latency, and multiple simultaneous connections. However, for more applications to take advantage of these features, it is necessary to wait until 5G standards, compliant products, and infrastructure that support these features become mature.

Business value created by 5G

For the applications described in the Section "Potential Use Cases" to be widely implemented in plants, the standards, products, and infrastructure must become mature. In addition, it is necessary to clarify that the investment in new 5G technology can be recouped. Although the specifications clearly show that 5G outperforms existing wireless communications in terms of technology, the business value created by the difference remains unknown. For example, 4G/LTE and Wi-Fi can offer support at a certain level for applications described in the Section "On-site operation support with mobile devices." Currently, a number of trials are being conducted in various industries to compare 5G

and existing technologies. The performance that 5G can demonstrate in actual environments and the business value it can offer remain to be proven.

Yokogawa's Proof-of-Concept Test: Remote AI Control of Plants

Yokogawa started a proof-of-concept test using a commercial 5G network[4] in April 2021 to confirm the practicality of the communication characteristics of 5G for plants. Among the examples shown in Figure 2, we focus on a use case of remote process control and aim to verify the feasibility of remote control via wireless communication (based on process control using AI technology[5][6]) (Figure 3). When the control targets are connected to AI in the cloud via wireless communication, there is a concern that communication latency will prevent proper control. We aim to solve this problem by using the low-latency characteristic of 5G.

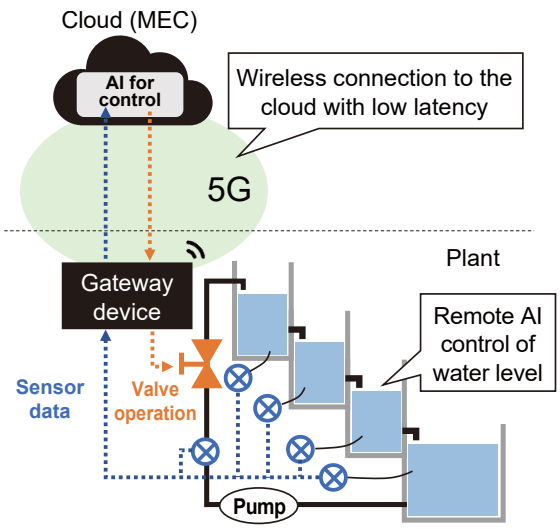

Figure 3 Configuration of the proof-of-concept test (remote water level control by AI in the 5G-connected cloud)

In this test, we control the water level in four water tanks in a staircase configuration. The field devices for water level control (valves and sensors) are connected to AI in the cloud or MEC platform via a gateway device capable of 5G communication. Through 5G communication, we are testing autonomous water level control, in which AI keeps track of the water level in each tank, operates valves to adjust the flow rate, and keeps the level of the third tank constant. Through this test, we aim to show that autonomous AI control can be easily implemented by simply introducing a gateway device that has 5G communication capabilities.

INTERNATIONAL STANDARDIZATION

3GPP

The 3rd Generation Partnership Project (3GPP) led by the standardization organizations of major countries and regions is mainly developing standards for mobile communication systems. Following 3G and 4G/LTE, the 3GPP is developing 5G standards that meet the requirements specified by ITU-R.

5G-ACIA

5G is expected to be used not only in the traditional mobile communications industry but also in various other industries. Incorporating new requirements for industrial use is an important factor in the successful development of its standards. International forums focusing on the use of 5G have been established in each industry and are working with the 3GPP to develop 5G standards.

In the manufacturing industry, the 5G Alliance for Connected Industries and Automation (5G-ACIA) was established in April 2018. Major companies from the manufacturing and telecommunications industries are participating and discussing the use of 5G technology in the manufacturing industry. As a founding member, Yokogawa has been actively involved since its establishment.

One of the important activities of the 5G-ACIA is to clarify 5G use cases in the manufacturing industry, identify the communication requirements that cannot be met by the current specifications, and notify its findings to the 3GPP to help develop standards. Yokogawa has been focusing on requirements mainly related to the process industry, enhancing the introduction of 5G to plants. In addition, the 5G-ACIA conducts a wide range of technical studies on the smooth integration of 5G with various existing technologies used for industrial automation, as well as addressing various requirements including security. Some of the results have been published as a White Paper on the website[7]. By taking advantage of its extensive technical expertise in process automation, Yokogawa has been participating in these studies. The 5G-ACIA also organizes webinars and workshops to help strengthen the ecosystem for the industrial use of 5G.

IEC/SyC COMM

The International Electrotechnical Commission (IEC) set up a new system committee in January 2020, called System Committees on Communication Technologies and Architectures (SyC COMM). One of its missions is to facilitate the incorporation of advanced communication technologies, which are being developed by other standardization bodies, into the development of IEC standards. In particular, it conducts horizontal international standardization activities for a wide range of industrial domains that are trying to become "smart" through digital technologies (smart manufacturing, smart cities, and so on). 5G technology is a representative example of communication technologies that are expected to be used for such industries. Yokogawa serves as the secretary of the SyC COMM National Committee of Japan, dispatches an international expert to SyC COMM, and contributes to international standardization activities related to digitalization in various IEC industrial fields using state-of-the-art communication technologies.

CONCLUSION

The use of 5G wireless communication technology is expected to expand in various industries. This paper outlined the technology, its communication characteristics, and potential use cases in the process industry. The high reliability, low latency, and other communication characteristics of 5G are essential for industrial use. For this technology to be widely used, 5G standards must be completed, compliant products made mature, and infrastructure developed. In addition, for its full-scale introduction in plants, it is necessary to clearly show through trials how 5G is different from existing technologies and what value it brings. Yokogawa has been conducting a proof-of-concept test on autonomous remote control of a plant by combining 5G with the cloud and AI technologies and is working to determine useful applications in plants. The company also participates in international forums and standardization organizations, including the 5G-ACIA, that promote the use of 5G in the manufacturing industry, and is helping to draw up standards and rules. We will contribute to promoting digitalization of the process industry through the development and practical application of 5G technology.

REFERENCES

(1) ITU, "IMT Vision - Framework and overall objectives of the future development of IMT for 2020 and beyond," ITU-R Recommendation M.2083-0, 2015, https://www.itu.int/dms_pubrec/itu-r/rec/m/R-REC-M.2083-0-201509-I!!PDF-E.pdf (accessed on September 8, 2021)

(2) 5G-ACIA, "5G Non-Public Networks for Industrial Scenarios," 5G-ACIA White Paper, 2019, https://5g-acia.org/wp-content/uploads/2021/04/WP_5G_NPN_2019_01.pdf (accessed on September 8, 2021)

(3) Ministry of Internal Affairs and Communications, "Announcement of Results of Appeal for Opinions on Draft Guidelines for Local 5G Implementation and Release of Guidelines Formulated" (press release, 2020) https://www.soumu.go.jp/main_sosiki/joho_tsusin/eng/pressrelease/2019/12/17_6.html (accessed on September 8, 2021)

(4) Yokogawa Electric Corporation and NTT DOCOMO, Inc., "Yokogawa to Undertake Proof of Concept Test of 5G, Cloud, and AI for Remote Control of Plant Systems with NTT DOCOMO," (press release, 2021) https://www.yokogawa.com/news/press-releases/2021/2021-04-14/ (accessed on September 8, 2021)

(5) Hiroaki Kanokogi, "AI in the Process Industry," Yokogawa Technical Report English Edition, Vol. 64, No. 1, 2021, pp. 53-60

(6) Go Takami, "AI-based Plant Control," Yokogawa Technical Report English Edition, Vol. 63, No. 1, 2020, pp. 33-36

(7) 5G-ACIA (5G Alliance for Connected Industries and Automation) website, https://5g-acia.org/ (accessed on September 8, 2021)