Flameproof Zirconia Oxygen Analyzer

ZS8C, ZS8D

Bulletin 11M07A03-02E

Yokogawa Zirconia Oxygen Analyzer for Saving Energy and Environmental Protection

Flameproof Zirconia Oxygen Analyzer

ZS8C, ZS8D

Long Service Life and Stable Operation with a Zirconia Sensor
Sensor Replacement is Easy

- A molecular bonding method completes installation of platinum. electrodes, and its inherent connection prevents separation of platinum from the zirconia element.
- A lead-less electrode design eliminates electrical disconnection.
- Special coating protects the platinum and prevents the sensors from deteriorating or becoming damaged.
- No special tool is required for cell replacement. Whenever required, the cell is easily removed by removing four screws from the top of the probe. Down time ("from the time installation is started until it is completed") is minimized to approximately ten minutes. After the cell is replaced, the analyzer requires a zero and span calibration only once.

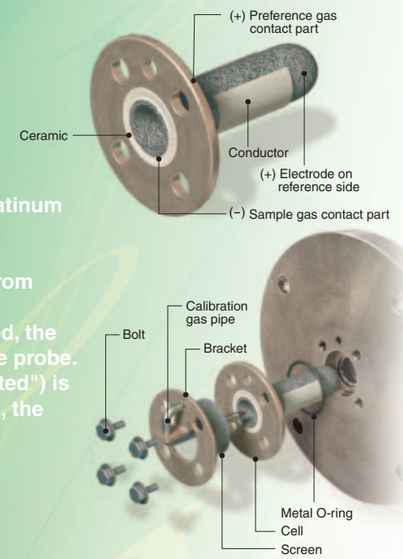

Principle of Zirconia Oxygen Analyzer

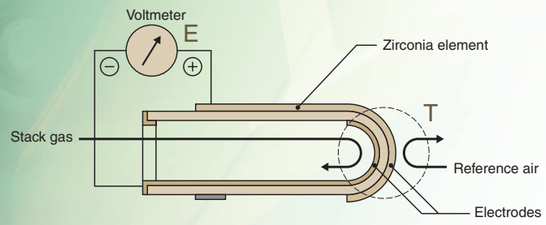

The principle of the zirconia oxygen analyzer is as follows:
At high temperatures the zirconia element, as a solid electrolyte, is a conductor of oxygen ions. Platinum electrodes are attached to the interior and exterior of the zirconia. Heating the element allows different partial oxygen concentrations of gases to come into contact with the opposite side of the zirconia creating an oxygen concentration cell. In other words, oxygen molecules gain electrons to form oxygen ions with higher partial oxygen concentrations. These ions travel through the zirconia element to the other electrode. At that point, electrons are released to form oxygen molecules (refer to the chemical formula). The Nernst expression can be applied to calculate the force by measuring the electromotive force E generated between the two electrodes.

Electrode with high oxygen partial pressure: $0+4e \rightarrow 2O^{2-}$ (Reference side)
Electrode with low oxygen partial pressure: $2O^{2-} \rightarrow O_2+4e$ (Measuring side)
Reactive electromotive force E(V) can be derived from Nemst's formula.

$$E=-\frac{RT}{nF}\ln\frac{P_X}{P_A}$$

R: Gas constant; T: Absolute temperature; n: 4; F: Faraday's constant;
Px: Oxygen partial pressure of zirconia element on the measuring gas side (%);
PA: Oxygen partial pressure of zirconia element on the reference air side (%);
Atmospheric air: 20.6%; Instrument air: 21.0%

For the ZR22 cell, temperature is 750˚C and the correspondingly reactive electromotive force E =

$$E=-50.74\log\frac{P_X}{P_A}\ [mV]$$

$$P_X=P_A\cdot 10^{-\frac{E}{50.74}}$$

Applications and System Configurations

The standard configuration consists of a detector and a converter, which are both installed outdoors. A flow setting unit, calibration gas cylinder, and the like can be added as needed. You can select the best detector to suit the temperature and pressure of the sample gas. The same converter can be used for all applications.

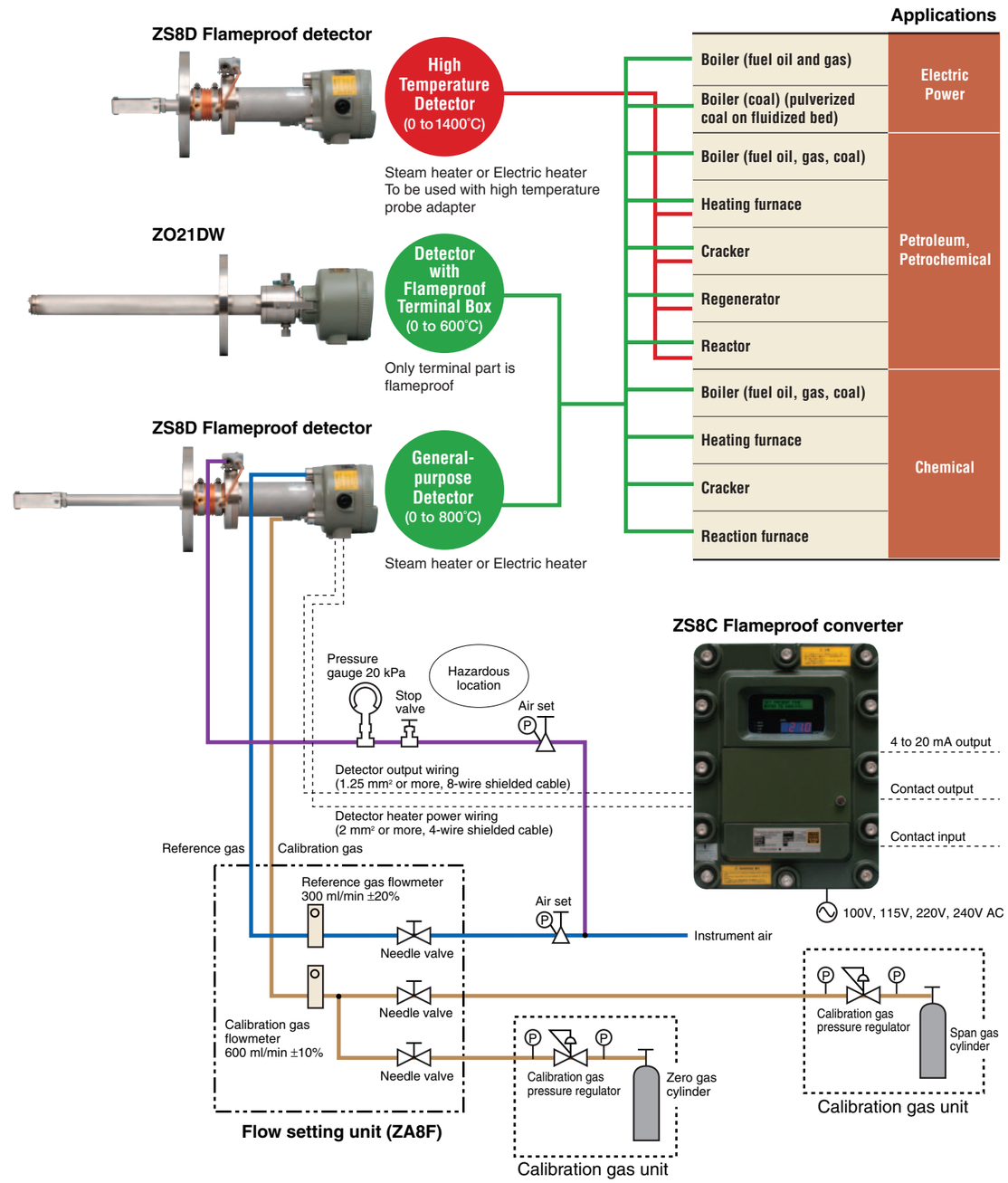

Energy and Environmental Protection

The ZS8 TIIS Flameproof Zirconia Oxygen Analyzer with a proven track record of performance and durability further enhances the reliability of monitoring and controlling of oxygen concentration in explosive atmospheres. This oxygen analyzer is most suitable for monitoring combustion and controlling the low-oxygen combustion of various industrial furnaces in explosive atmospheres such as at petroleum refineries, petrochemical plants, and natural gas plants.

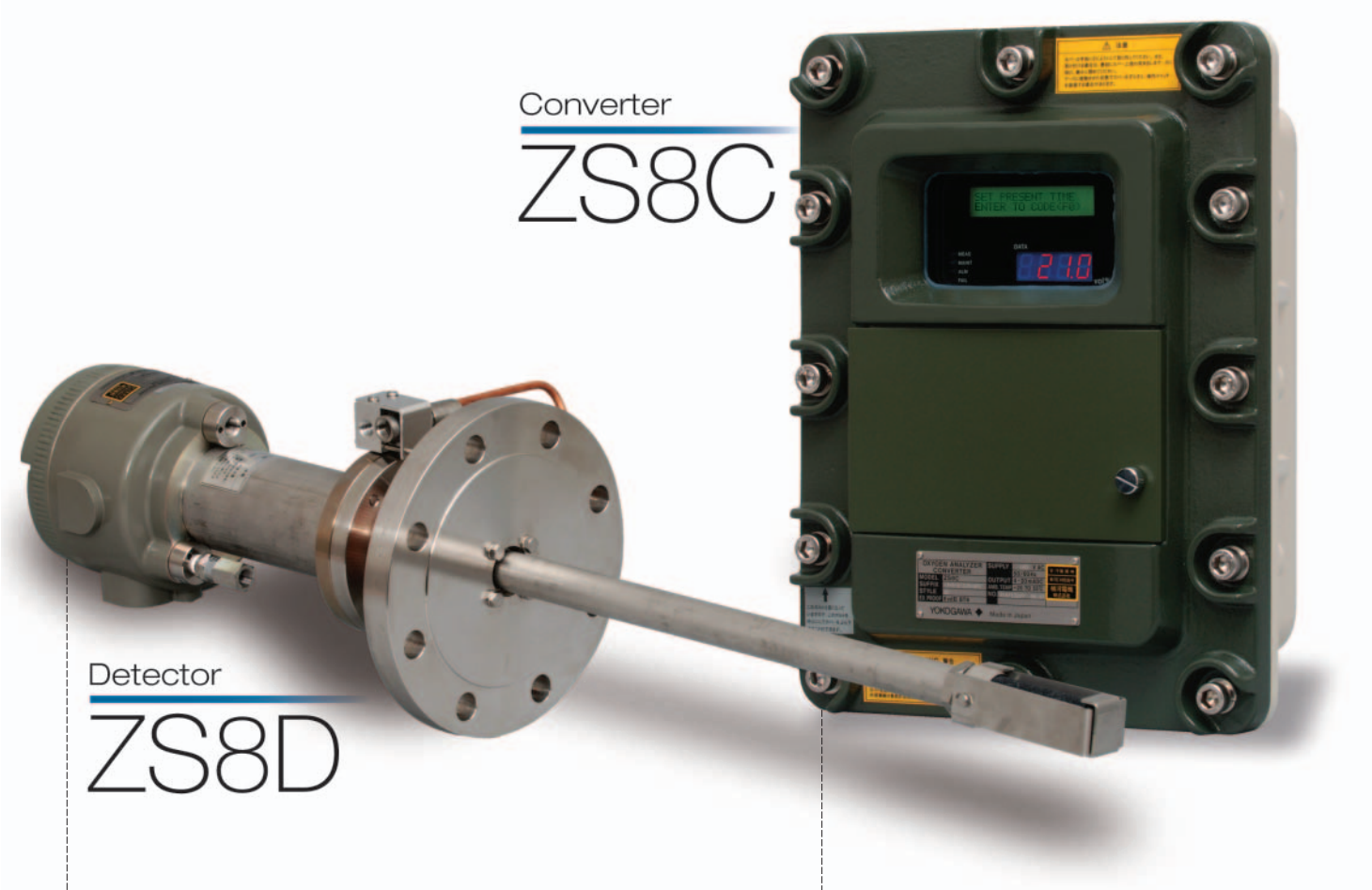

Features of Detector

- **TIIS Flameproof Structure**
  Exd II BT3X flameproof structure.
- **Heat Insulation above Sulfuric Acid Dew Point**
  Using heat insulation provided by electric heaters or steam heaters, the probe is always set at a temperature higher than the dew point of sulfuric acid (120 to 160°C). Thus, there is no corrosion caused by sulfur contained in the sample gas. In the case of heat insulation provided by electric heaters, if the temperature of the heater decreases, the ejector air can be cut off to protect the analyzer.
- **Highly Reliable Oxygen Analysis at High Temperatures (up to 1400°C)**
  Its flameproof construction based on our non-flameproof converter and probe offers high reliability.
- **Easy Replacement of Zirconia Cell**
  The same cell can be used for both non-flameproof and flameproof models, and easy to replace.
- **Zirconia Cell Enables Quick Response and Long-term Stability**

Features of Converter

- **TIIS Flameproof Structure**
  Exd II BT6 flameproof structure.
- **Large, Easy-to-Read Digital Display**
  The large digital display can display the cell emf and temperature as well as oxygen concentration. If any abnormality occurs, an alarm is displayed.
- **Self-diagnostic Function**
  A variety of self-diagnostic functions are available such as prediction of sensor life, impedance check, and response check.
- **One-touch Calibration**
  Calibration can be executed by simply pressing the calibration button after flowing air and the standard gas (when the flow setting unit is included).

■Standard Specifications

■General Specifications

Measurement object	Oxygen concentration in combustion exhaust gases and mixed gases (excluding flammable gases)
Measurement system	Zirconia system
Flameproof construction	Detector: Exd II BT3X (Max. surface temperature 200˚C) Converter: Exd II BT6 (Max. surface temperature 85˚C)
Measurement range	Display: 0 to 100 vol%O_2 Output: 0 to 5 vol%O_2 to 0 to 25 vol%O_2
Warm-up time	Approx. 30 minutes
Maximum distance between detector and converter	300 m or less with 1.25 mm^2 conductors
Power supply	100, 115, 220, 240 V AC +10%, -15% 50/60 Hz
Power consumption	Analyzer: 80 VA for ordinary use, Max. 270 VA Electric heaters providing heat insulation: Approx. 200 VA for ordinary use, Max. approx. 400 VA

■Detector

Flameproof Detector ZS8D	
Sampling method	Air ejector method Ejector air; Supply pressure 20 kPa, flow rate at 4 l/min or less
Sample gas conditions	Temperature: ZS8D-L-J-□□□; 0 to 800˚C (general) ZS8D-H; 800 to 1400˚C (high-temperature) Pressure: -5 to 5 kPa for ZS8D-L general purpose -1.5 to 5 kPa for ZS8D-H high temperature Flow velocity: 30 m/s or less Dust amount: 500 mg/Nm^3 or less
Heat insulation	Steam heater when heavy oil fuel or heavy oil and gas fuel mixture is used. Electric heaters when gas fuel is used.
Surface temperature	200˚C or less
Reference gas	Instrument air 300 ml/min ± 20%
Calibration gas	Instrument air and standard gas 600 ml/min ±10%
Insertion length	0.5, 0.7, 1.0, 1.5 m
Installation	Flange mounting Flange: ZS8D-L: JIS 10K 100 FF SUS304, JPI Class 150 4 RF SUS304, ANSI Class 150 4 RF SUS304, DIN PN10 DN100 A SUS304 ZS8D-H: JIS 5K 65 FF SUS304 Joint: Rc1/4 or 1/4NPT
Material in contact with gas	Detector SUS310S (or SUS304), Zirconia, SUS304 (flange), SUS316 (tube)
Construction	Flameproof Exd II BT3X
Case material	Material in contact with gas: SUS316, Terminal box: Aluminum, Others: SUS304
Weight	Approx. 10.3 kg to 17 kg
Detector with Flameproof Terminal Box ZO21DW	
Sample gas condition	Temperature: 0 to 600˚C Pressure: -20 to +20 kPa
Ambient temperature	-10 to +70˚C (terminal box temperature)
Reference air flow rate	Instrument air 800 ml/min.
Material in contact with gas	Detector: SUS316, Zirconia, SUS304 (flange)
Insertion length	0.4, 1.0, 1.5, 2.0, 3.0 m
Installation	Flange mounting (FF) Flange: JIS 10K 100 A FF SUS304, ANSI Class 150 4 RF SUS304, DIN PN10 DN100 A SUS304 Joint: Rc1/8
Construction	The terminal box is explosion protected (d2G4).
Weight	Approx. 6.5 kg to 20.0 kg
Flameproof Converter ZS8C	
Analog output signal	4 to 20 mA DC (max. load resistance 550 Ω), input/output isolation Range: any settings between 0 to 5 vol%O_2 to 0 to 25 vol%O_2; switching between 2 ranges by external contact input possible (optional): partial range possible
Contact output	3 points, contact capacity 30 V DC 2A, 250 V AC 2A (resistive load) Programmable for each contact output: (1) Abnormal (self-diagnosis) (2) HiHi alarm (3) Hi alarm (4) LoLo alarm (5) Lo alarm (6) Entry (7) Range switching answerback (8) Warm-up (9) Reduction of calibration-gas pressure (repeat output of contact input) (10) Calibration (11) Blow-back
Contact output for solenoid valve	Solid State Relay (Triac) output: 2 points Contact capacity: 250 V AC, 1 A
Serial communications	RS-422-A interface
Self-diagnosis	Abnormal cell, abnormal cell temperature (low) (high), abnormal analog circuit, abnormal calibration, abnormal ROM/RAM, power failure
Contact input (optional)	2 points, isolated Programmable for each contact input: (1) Reduction of calibration-gas pressure (2) Range switching (3) External calibration start (4) Process abnormal alarm (5) Blow-back start
Calibration	One-touch, automatic/semiautomatic (optional)
Calibration gas concentration setting range	0.3 to 25 vol%O_2 (min. setting unit: 0.01 vol%O_2) Use the standard zero and span gases which are gas mixtures of nitrogen and about 10% oxygen for an 80 to 100% scale.
Ambient temperature	-20 to +55˚C
Power supply	100, 115, 220, 240 V AC +10%, -15%, 50/60 Hz
Construction	Exd II BT6, JIS C0920 waterproof, NEMA3 or equivalent
Installation	Wall or pipe mounting
Case material	Aluminum alloy
Paint colors	0.6GY3.1/2.0 (for instrument front cover) and 2.5Y8.4/1.2 (instrument case)
Paint	Baked epoxy resin
Weight	Approx. 19 kg (100 to 115 V AC) Approx. 20.5 kg (220 to 240 V AC)

For details, refer to General Specification, GS11M7A3-E.

■Characteristics

Repeatability	± 0.5% of span (0 to 5 vol%O_2 or more and up to 0 to 25 vol%O_2 range)
Linearity	± 1% of span (0 to 5 vol%O_2 or more and up to 0 to 25 vol%O_2 range)
Drift	± 2.0% of span/month (both zero and span)
Response time	90% response within 5 seconds (measured when gas is fed through the calibration gas inlet and the analog output signal begins to change)

■External Dimensions

Unit: mm

■Flameproof Detector ZS8D

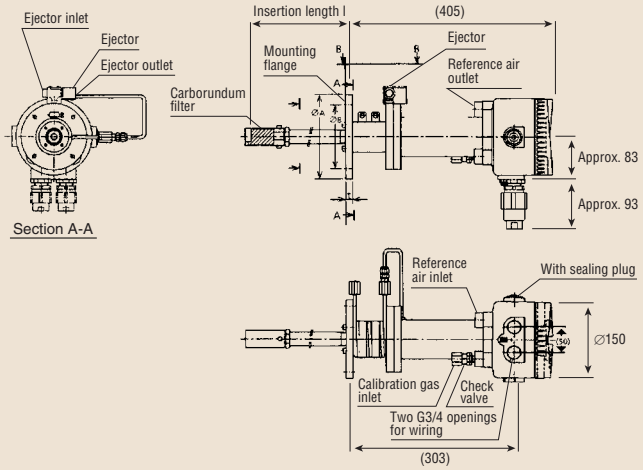

■Flameproof Converter ZS8C

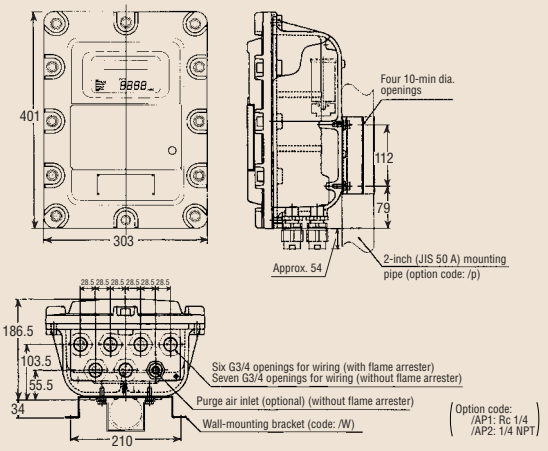

■Model and Suffix Codes

■Flameproof Probe (0 to 1400°C)

Model	Suffix code	Option code	Description
ZS8D	-L ----------	--------	General-purpose probe (0 to 800˚C)
	-H ----------	--------	High-temperature probe (800 to 1400˚C)
Flameproof standard	-J ----------	--------	Exd II BT3X (Maximum surface temperature: 200˚C)
Probe material	-A ----------	--------	SUS310S: Specify for general-purpose probe.
	-L ----------	--------	SUS304: Specify for high-temperature probe.
Insertion length	-010 -------	--------	0.1 m: Specify for high-temperature probe.
	-050 -------	--------	0.5 m: SUS310S (0 to 800˚C)
	-070 -------	--------	0.7 m: SUS310S (0 to 800˚C)
	-100 -------	--------	1.0 m: SUS310S (0 to 800˚C)
	-150 -------	--------	1.5 m: SUS310S (0 to 800˚C)
Heat insulation model	-1 --------	--------	Steam heater (*1)
	-2 --------	--------	Electric heater
Power supply (electric heater providing heat insulation)	-N ------	--------	For heat insulation provided by steam heaters
	-3 ------	--------	220V AC, 50/60Hz
	-4 ------	--------	240V AC, 50/60Hz
	-5 ------	--------	100V AC, 50/60Hz
	-8 ------	--------	115V AC, 50/60Hz
Exhaust method (*2)	-N ----	--------	Specify for high-temperature probe.
	-0 ----	--------	Discharge outside furnace
	-1 ----	--------	Recirculate in furnace
Flange joint connection	-H --	--------	JIS 5K 65 FF, specify for high-temperature probe.
	-J --	--------	JIS 10K 100 FF
	-K --	--------	JPI Class 150 4 RF
	-A --	--------	ANSI Class 150 4 RF
	-E --	--------	DIN PN10 DN100 A
Calibration gas, reference gas, and ejector inlet joints (*3)	J --	--------	Rc1/4
	A--	--------	1/4NPT
Option: Heat insulation jacket (*4)	/JS ---		For steam heaters
	/JE ---		For electric heaters

(*1) A steam heater [-1] must be specified when heavy oil fuel gas and heavy oil fuel mixture is used or dew point temperature of exhaust gas is about 130˚C. By selecting either -1 or -2, the steam heater or electric heater is installed. For high-temperature probes, only "discharge outside furnace" is applied.

(*2) Select whether to discharge mixed gases (the sample gas sucked in by the ejector plus the ejector air) outside the furnace or to recirculate them in the furnace. If -1 is selected, a gas-return pipe is provided.

(*3) The flameproof probe is equipped with a check valve and auxiliary ejector assembly as standard.

(*4) Heat insulation jacket must be ordered. It is essential to use owning hood in where installed in surrounding rain.

■Probe with Flameproof Terminal Box (0 to 600˚C)

Model	Suffix code	Option code	Description
ZO21DW	-L ----------	--------	Probe with flameproof terminal box
Insertion length	-040 ----------	--------	0.4m
	-100 ----------	--------	1.0m
	-150 ----------	--------	1.5m
	-200 ----------	--------	2.0m
	-300 ----------	--------	3.0m
Flange joint connection	-J ---------	--------	JIS 10K 100A FF SUS304
	-A ---------	--------	ANSI Class 150 4 RF SUS304
	-E ---------	--------	DIN PN DN100 A SUS304
Style code	*A --------	--------	Style A
Option: Check valve		/CV---	With check valve
Stop valve		/SV---	With stop valve
Cable gland		/G ----	Cable glands (2 pieces)

(*A) Cable gland [/G] must be specified when installed in hazardous area.

■Flameproof Converter

Model	Suffix code	Option code	Description
ZS8C	----------	--------	Converter
Flameproof standard	-J ----------	--------	Exd II BT6 (Max. surface temperature 85˚C)
Power supply	-3 ----------	--------	220V AC, 50/60Hz
	-4 ----------	--------	240V AC, 50/60Hz
	-5 ----------	--------	100V AC, 50/60Hz
	-8 ----------	--------	115V AC, 50/60Hz
Auxiliary heater thermostat for probe(*1)	-0 ---------	--------	For probe heat insulation provided by steam heaters
	-1 ---------	--------	For probe heat insulation provided by electric heaters
Panel	-E -------	--------	English
	-J -------	--------	Japanese
Option: Wall mounting		/W ----	With wall mounting bracket
		/P-----	With pipe mounting bracket
Air-purge connection		/AP2--	1/4NPT
		/AP1--	Rc1/4

(*1) A steam heater [-0] must be specified when heavy oil fuel, gas and heavy oil fuel mixture is used or dew point temperature of exhaust gas is about 130˚C.

YOKOGAWA ELECTRIC CORPORATION **http://www.yokogawa.com/an/**
World Headquarters
9-32, Nakacho 2-chome, Musashino-shi, Tokyo 180-8750, JAPAN

YOKOGAWA CORPORATION OF AMERICA http://www.yokogawa.com/us/
YOKOGAWA EUROPE B.V. http://www.yokogawa.com/eu/
YOKOGAWA ENGINEERING ASIA PTE. LTD. http://www.yokogawa.com/sg/
YOKOGAWA CHINA CO., LTD. http://www.yokogawa.com/cn/
YOKOGAWA MIDDLE EAST & AFRICA B.S.C.(c) http://www.yokogawa.com/bh/

Represented by:

ANA-01E

Subject to change without notice. [Ed:01/b]

YOKOGAWA