General Specifications

Model DM8
Vibration Type Liquid Density Meter

GS 12T3A1-E

■ Overview

In 1967, YOKOGAWA developed the Model VD6 Vibration Type Liquid Density Meter in response to user requests for an online density meter, to assist in process automation and saving labor resources and energy while further improving and stabilizing quality. This was an important development in the instrumentation field, because density is a fundamental physical quantity, the accurate measurement of which is important for almost all processes. The VD6 density meter has gone on to develop an excellent reputation as a highly stable high sensitivity meter.

The Model DM8 Vibration Type Density Meter is a highly reliable, multi-function meter developed on the basis of our experience with the VD6 and which takes advantage of the latest computer technology to integrate a wide range of sensor techniques. Its converter incorporates a microprocessor to directly convert frequency signals from the sensor into density values and display them and is provided with a variety of functions such as one-touch calibration, self diagnosis, digital output (RS-232C), etc.

■ System Configuration

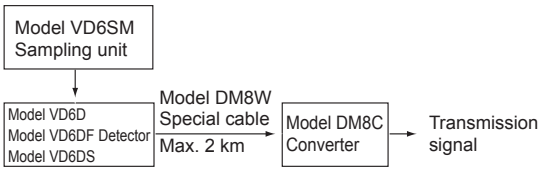

■ System Configuration

1. General Specifications

Measurement object: Liquid density
Measurement principle: Vibration density measurement
Measurement range :
Density: 0.5 to 2.0 g/cm^3
Temperature: -10 to 100°C
Distance between Detector and Converter: Up to 2 km
Power supply:90 to 132 V AC or 180 to 264 V AC, 50/60 Hz
Power consumption: 20 VA

2. Detector

Note: These detectors cannot be used with highly corrosive liquids and solutions likely to stick to sensors. If it is desired to be applied to solutions containing slurry or sludge, consult with YOKOGAWA. For measuring NaOH solutions, use sensors with a nickel vibrator.

Converter

Detector

(1) General Purpose Detector Model VD6D

Detector construction: Non-explosion protection, rainproof construction
Case material: Cast Aluminium alloy
Case coating: Epoxy resin, baked finish
Case color: Jade green (equivalent to Munsell 7.5BG4/1.5)
Wetted part materials:
Base: 316 SS
Vibrator: 316 SS or Ni (Au Blazing: BAu·4)
Measuring liquid temperature: -10 to 100°C
Measuring liquid pressure: 2 MPaG or less
Withstanding pressure: 4.9 MPaG
Steam tracing: Available
Process connection: Rc1/4
Electrical connection: G3/4
Mounting: JIS 50A (2-inch) pipe mounting
Ambient temperature: -10 to 50°C
Weight: Approx. 12 kg

(2) Flameproof (Explosionproof) Detector Model VD6DF

Detector construction:
TIIS; d2G3 or
FM; Class I, Division 1, Groups C and D, Flameproof construction
Process connection: Rc1/4 or 1/4NPT female (only for VD6DF-□□*B/FM)
Electrical connection: G3/4 or 3/4NPSM female (only for VD6DF-□□*B/FM)
Specifications are the same as for the (1) General Purpose Detector except for the above construction.

(3) Sanitary Use Detector Model VD6DS

Process connection: Special joint for connection to JIS 6A pipe (with gasket)
Wetted part materials: Added to the standard model
Gasket: Fluoro resin (PTFE)
O-Ring: Fluoro rubber (FKM)
Stream tracing: Not available
Specifications are the same as for the (1) General Purpose Detector except for the above two items. Temperature detector protecting tubes are detachable.

CAUTION
Select the material of wetted parts with careful consideration of process characteristics. Inappropriate selection may cause leakage of process fluids, which greatly affects facilities. Considerable care must be taken particularly in the case of strongly corrosive process fluid such as hydrochloric acid, sulfuric acid, hydrogen sulfide, and sodium hypochlorite. If you have any questions about the wetted part construction of the product, be sure to contact Yokogawa.

Please select appropriate equipment in accordance with the laws and regulations of the relevant country/region, when it is used in a location where explosive atmospheres may be present.

YOKOGAWA
Yokogawa Electric Corporation
2-9-32, Nakacho, Musashino-shi, Tokyo, 180-8750 Japan
GS 12T3A1-E

10th Edition Dec. 2015

3. Converter Model DM8C

Display: Digital display, five digits LED
Display contents:
Density (g/cm^3) after conversion to reference temperature (center temperature)
Density (g/cm^3) at the measuring temperature
Measuring liquid temperature (°C)
Set density value for the calibration liquid (g/cm^3) (displayed on call)
Temperature coefficient set value for the calibration liquid (x10^{-5} g/cm^3/°C) (displayed on call)
Output signal set value (%) (displayed on call)
Setting for output range low limit (g/cm^3) (displayed on call)
Setting for output range high limit (g/cm^3) (displayed on call)
Reference temperature (center temperature) set value (°C) (displayed on call)
Temperature coefficient set value for the measuring liquid (x10^{-5} g/cm^3/°C) (displayed on call)
Fault contents display
Output signal:
Analog output: 4 to 20 mA DC (load resistance 550 Ω or less), and 0 to 1 V DC (load resistance 250 kΩ or more), isolated output.
Density (g/cm3) after conversion to the reference temperature
Digital output: RS-232C
Asynchronous system (output only)
Baud rate: 1200 bps
Data format: ASCII,
data length; 8bit
Data:
Density (g/cm^3) after conversion to the reference temperature
Density (g/cm^3) at the measured temperature
Measured liquid temperature
Calibration state
Failure alarm
Output signal span:
0.05 to 0.5 g/cm^3 settable
Reference temperature set range:
0 to 100°C (in increments or decrements of 1°C)
Contact output on failure:
One point. Contact closed on failure or power failure. Contact open when normal.
Permissible voltage: 220 V DC, 250 V AC
Permissible current: 2A (resistive load)
Permissible contact power: 60 W
Fault detecting contents:
Detector failure and converter failure
Failure output:
Analog signal: Falls down to about -10% of the output signal span
Digital signal: Error message outputs
Output signal hold:
Holds in the CAL. or Maintenance mode.
Settable range for temperature coefficient:
0 to 0.002 g/cm^3/°C
Calibration procedure:
One-touch calibration by strong calibration liquid density (one-point calibration)
Ambient temperature: -10 to 55°C
Power supply: 90 to 132 V AC or 180 to 264 V AC,50/60 Hz
Case construction: Dust and rain proof construction
EMC compatibility: Korea Electromagnetic Conformity Standard Class A 한국 전자파적합성 기준
Coating color:
Door: Equivalent to Munsell 2.8GY6.4/0.9
Case: Equivalent to Munsell 2.0GY3.1/0.5
Coating finish: Baked finish epoxy resin
Mounting: To panel, wall or 2-inch pipe
Air purge connector: Rc1/8, Rc1/4, or 1/4NPT female is also optionally available
Electrical connection: Five holes, 27 mm dia.
Attached with four plastic waterproof plugs equivalent to JIS A15, and one plastic waterproof plug equivalent to JIS A20.
Weight: Approx. 7.0 kg

4. Special Cable Model DM8W

Type: Six-conductor double shield cable
Insulator: Polyethylene
Sheath: Polyvinyl chloride
Insulation resistance: 1000 MΩ/km
Conductor resistance: 15.31 Ω/km
Finished O.D.: 15.8 mm
Weight: Approx. 0.3 kg/m

5. Sampling Unit Model VD6SM

External dimensions:
Approx. 400(W) x 400(D) x 1350(H) mm
Coating finish: Epoxy resin, baked gray finish (equivalent to Munsell N7)
Wetted part materials: 316 SS, Teflon (gasket for flowmeter, pressure gauge and strainer), Ni for /FN option.
Weight: Approx. 80 kg
Process conditions:
Inlet temperature: 0 to 100°C
Inlet pressure: 0 to 1 MPa or 0 to 2 MPa
Required differential pressure: At least 0.1 MPa
Flow rate: 1 to 10 L/min
Process connection: Screw, flange or welding socket

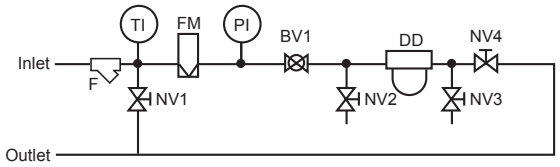

Sampling System Diagram

Element specitications
F: Strainer body; 316 SS,
element; 316 SS, Ni fo /FN option
PI: Pressure gauge, 0 to 1 MPa or 0 to 2 MPa, 316 SS
TI: Thermometer, 0 to 100 °C or 0 to 150 °C, 316 SS
FM: Flowmeter, tapered metal tube flowmeter, 1 to 10 L/min, 316 SS
BV: Ball valve, 316 SS
NV: Needle valve, 316 SS
DD: Density detector

Note: This sampling system cannot normally be applied to food applications, if it is desired to be applied to food applications, consult with YOKOGAWA.

■ Characteristics

(Overall characteristics after combing the detector and the converter)

Repeatability: 5 x 10^{-4} g/cm^3 (for digital output) 1% of span (for analog output)

Linearity: ±0.5% of span (when span is 0.2 g/cm^3 or less)
±1% of span (when span is more than 0.2 g/cm^3)

Temperature characteristics:
±0.5% of span/±10°C (Compensating error for changes in the measuring liquid temperature and detector temperature)

Flow characteristics:
±0.1% of span in the 0 to 5 L/min range

Pressure characteristics:
±0.0005 g/cm3/±98 kPa change

Viscosity error:
±0.1% of span in the 0 to 1500 cP range

■ Standard Accessories

Detector (VD6)

Syringe (for injecting standard solution or solvent)	1 pc.
Brush (for cleaning the detector)	1 pc.
Allen wrench for terminal box	1 pc.
Allen wrench for locking the cover	1 pc.
O-Ring	1 bag
Silica gel	2 packs

Converter (DM8C)

Fuse for the converter (3A)	1 pc.
Ferrite core *1	2 pcs.
Cable straps *1	4 pcs.

*1: for /KC

■ Characteristics

1. Detector

(1) General Purpose Detector

Model	Suffix code	Option code	Description
VD6D	••••••••••••••	••••••••••••	General Purpose Liquid Density Detector
Vibrator material	**-S3** **-N1**	•••••••••••• ••••••••••••	316 SS Nickel
—	***B**	••••••••••••	Style B

(2) Flameproof Detector

Model	Suffix code	Option code	Description
VD6DF	••••••••••••••	••••••••••••	Flameproof Liquid Density Detector
Vibrator material	**-S3** **-N1**	•••••••••••• ••••••••••••	316 SS Nickel
-	***B**	••••••••••••	Style B
(Option)		**/FM**	NEC Class I, Division 1, Group C and D, explosion-proof

(3) Sanitary Use Detector

Model	Suffix code	Option code	Description
VD6DS	••••••••••••••	••••••••••••	Sanitary Use Liquid Density Detector
Vibrator material	**-S3**	••••••••••••	316 SS
—	***B**	••••••••••••	Style B

2. Converter

Model	Suffix code	Option code	Description
DM8C	••••••••••••••	••••••••••••	Vibration Type Liquid Density Converter
Power supplyl	**-A1** **-A2**	•••••••••••• ••••••••••••	90 to 132 V AC,50/60Hz 180 to 264 V AC,50/60Hz
—	***D**	••••••••••••	Style D
(Option) Air purge connector		**/AP1** **/AP2** **/KC**	Rc1/4 female 1/4NPT female for Korea *1

*1: Be sure to select this if you want to use the converter in Korea.

3. Special Cable

Model	Suffix code	Option code	Description
DM8W	••••••••••••••••	••••••••••••	Special Cable for Liquid Density Meter
Cable lengthl	**-L□□□□**	••••••••••••	Length (unit: m)
—	***A**	••••••••••••	Style A

(Note) Enter the cable length in "-L□□□□ in m."
[Example] L0050 for 50 m
L0100 for 100 m
L2000 for 2 km

4. Sampling Unit

Model	Suffix code	Option code	Description
VD6SM	•••••••••••••••••••••••••••••••••	••••••••••••••••••	Sampling Unit for LIquid Density Meter *1
Piping connection	**-JPT**	••••••••••••••••••	Rc1/2
	-10K	••••••••••••••••••	JIS 10K 15 RF Flange
	-20K	••••••••••••••••••	JIS 20K 15 RF Flange
	-150	••••••••••••••••••	ANSI Class 150 1/2 RF Flange
	-300	••••••••••••••••••	ANSI Class 300 1/2 RF Flange
	-151	••••••••••••••••••	JPI Class 150 1/2 RF Flange
	-301	••••••••••••••••••	JPI Class 300 1/2 RF Flange
	-WST	••••••••••••••••••	1/2 inch welding socket
Pressure gauge range	**-PG10**	••••••••••••••••••	1 MPa
	-PG20	••••••••••••••••••	2 MPa
	-PK10	••••••••••••••••••	Diaphragm type 1 MPa
	-PK20	••••••••••••••••••	Diaphragm type 2 MPa
Temperature range	**-T100**	••••••••••••••••••	0 to 100°C
	-T150	••••••••••••••••••	0 to 150°C
—	***B**	••••••••••••••••••	Style B
Option		**/ST**	With steam tracing *2
Material of strainer element		**/FN**	Ni *3

*1: VD6SM sampling unit is not including the detector. Order the detector VD6D or VD6DF, separately.
VD6DF.../FM can not be installed in this sampling unit.
DM8C converter and special cable DM8W are also required for sampling system of density meter.
*2 If steam tracing is necessary, select the diaphragm type pressure gauge.
*3 If measuring solution includes NaOH (≤30%) , select option code /FN of Ni.

■ Wiring Connection

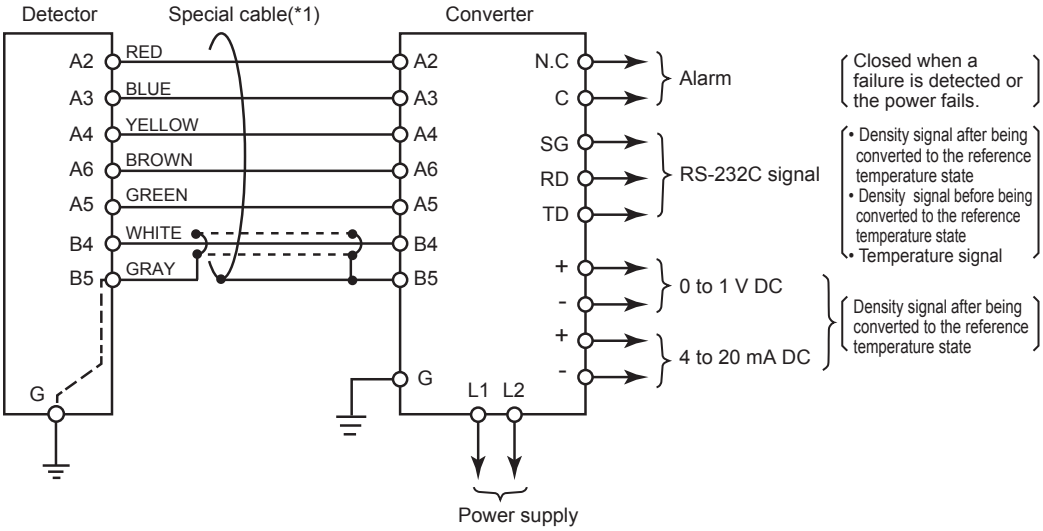

*1: If you selected the /KC option, be sure to attach the included ferrite cores to both ends of the special cable.

■ External Dimensions

1. Detector

- **General Purpose and Flameproof Detector Models VD6D and VD6DF**

Unit: mm

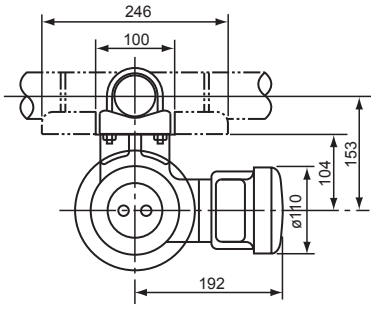

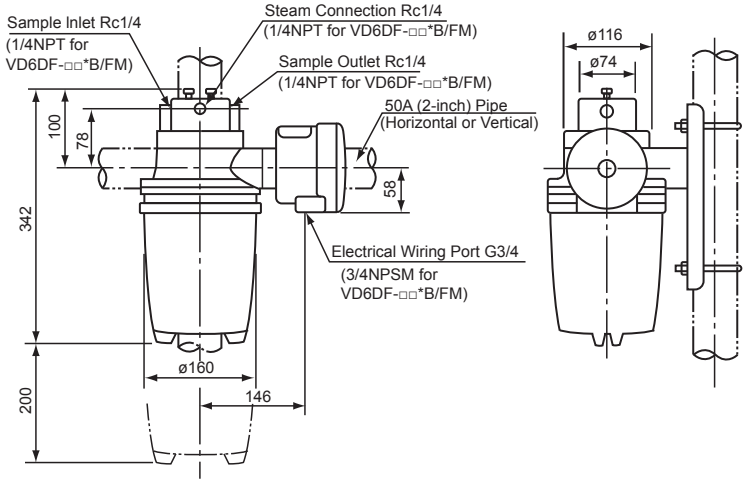

- **Sanitary Use Detector Model VD6DS**

Unit: mm

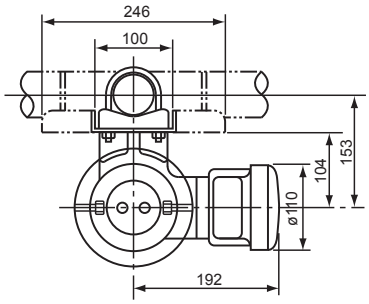

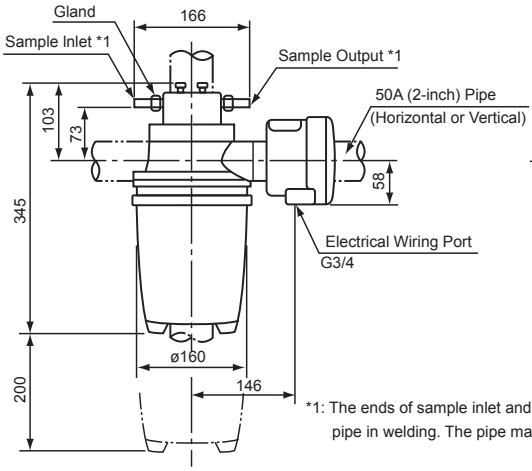

*1: The ends of sample inlet and outlet are connected with 6A (1/8-inch) pipe in welding. The pipe may be removed by loosing the gland.

2. Converter Model DM8C

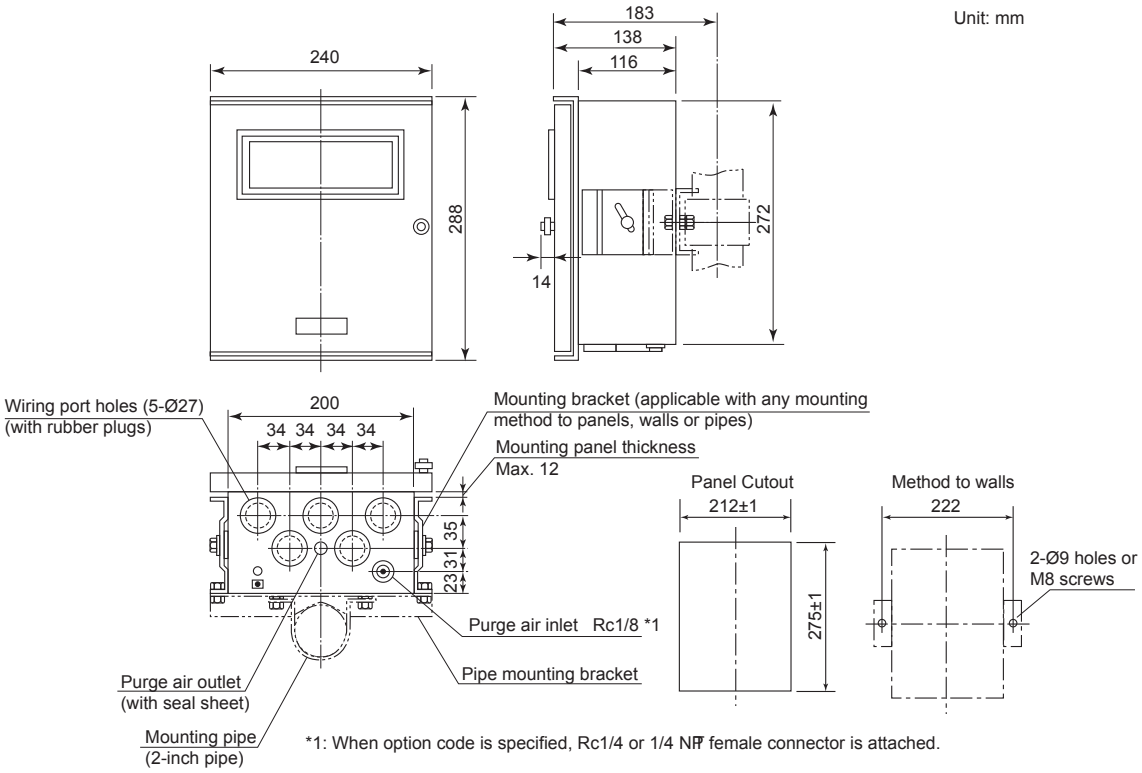

3. Special Cable Model DM8W

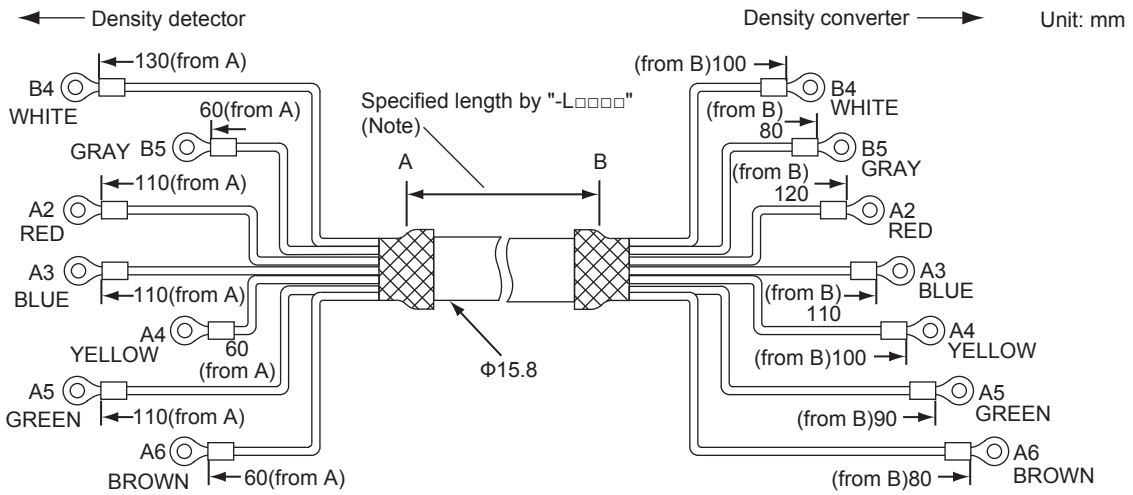

(Note) Cable length is specified by the suffix code of "-L□□□□" , □□ is specified in meter.
e.g. for 50 m, -L0050
for 100 m, -L0100
for 2 km, -L2000

4. Sampling Unit Model VD6SM

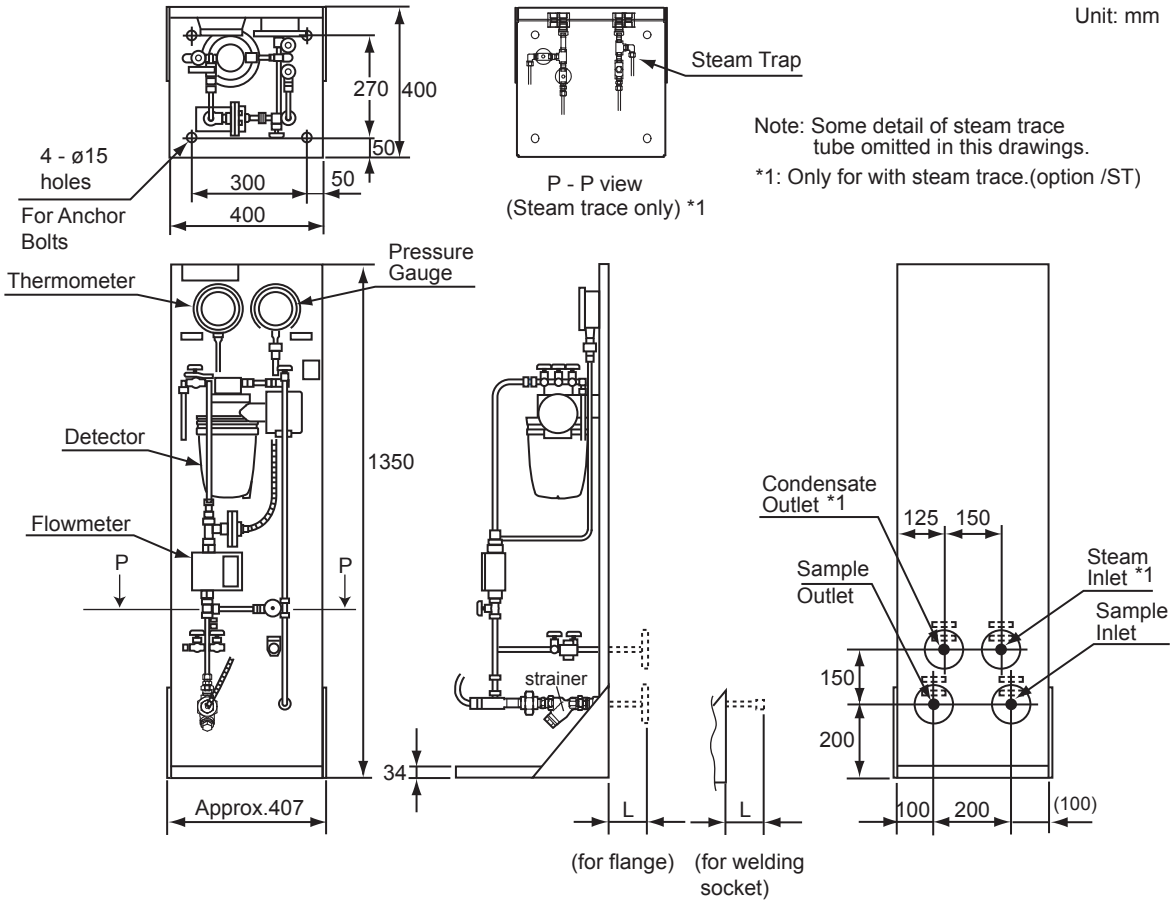

Model and Codes	Connection Type	L
VD6SM - JPT - P□□ 0 - T1 □ 0 *B	Rc 1/2 female	0
VD6SM - 10K - P□□ 0 - T1 □ 0 *B	JIS 10K 15 RF Flange	100
VD6SM - 20K - P□□ 0 - T1 □ 0 *B	JIS 20K 15 RF Flange	100
VD6SM - 150 - P□□ 0 - T1 □ 0 *B	ANSI Class 150 1/2 RF Flange	100
VD6SM - 300 - P□□ 0 - T1 □ 0 *B	ANSI Class 300 1/2 RF Flange	100
VD6SM - 151 - P□□ 0 - T1 □ 0 *B	JPI Class 150 1/2 RF Flange	100
VD6SM - 301 - P□□ 0 - T1 □ 0 *B	JPI Class 300 1/2 RF Flange	100
VD6SM - WST - P□□ 0 - T1 □ 0*B	1/2 inch Welding Socket	100

Inquireis sheet for the Vibration Liquid Density Meter

Thank you for inqurity on our vibrationl iquid density meter.

Please specify your requiremets by checking the appropriate boxes and filling in the blanks with the requested information.

1. General Items

Company name: _____

Contact person: _____ Section: _____

Address: _____ (Phone No. _____)

Plant name: _____

Measurement location: _____

Purpose: ☐ Indication ☐ Recording ☐ Alarm ☐ Control

Power supply: _____ VAC, _____ Hz

2. Measurement conditions

(1) Liquid temperature: _____ to _____, normally _____ [°C]

(2) Liquid pressure: _____ to _____, normally _____ [kPa]

(3) Liquid flowrate: _____ to _____, normally _____ [L/min]

(4) Slurry or soiling components?: ☐ Yes ☐ No

(5) Name of measured liquid: _____

(6) Composition of measured liquid: _____

(7) Other: _____

3. Installation location

(1) Ambient temperature: Approx. _____ [°C]

(2) Installation location: ☐ Outdoors ☐ Indoors

(3) Other: _____

4. User requirements

(1) Measurement range: _____

(2) Vibration material: ☐ 316 SS ☐ Ni

(3) Cable length between detector and converter: _____ m

(4) Sampling system: ☐ No ☐ Yes with VD6SM

(5) Other: _____