General Specifications

GS 30B05A10-01EN

Models PM4SSET, PM4S7710, PM4S7400, PM4S7700, PM4S7701, PM4S7702, PM4S7100, PM4S7711, PM4S7720
Plant Resource Manager

[Release 4]

■ GENERAL

Plant Resource Manager (PRM) is an asset management software tool for the digital network era. The PRM software efficiently manages and supports maintenance work of field devices, which contributes in reducing total cost of ownership (TCO) of an industrial plant.

The PRM software packages support intelligent devices such as FOUNDATION™ Fieldbus, HART, PROFIBUS, and ISA100.11a field wireless devices as well as conventional analog devices.

■ FUNCTIONAL SPECIFICATIONS

● Organization of functions

The following figure shows the organization of functions.

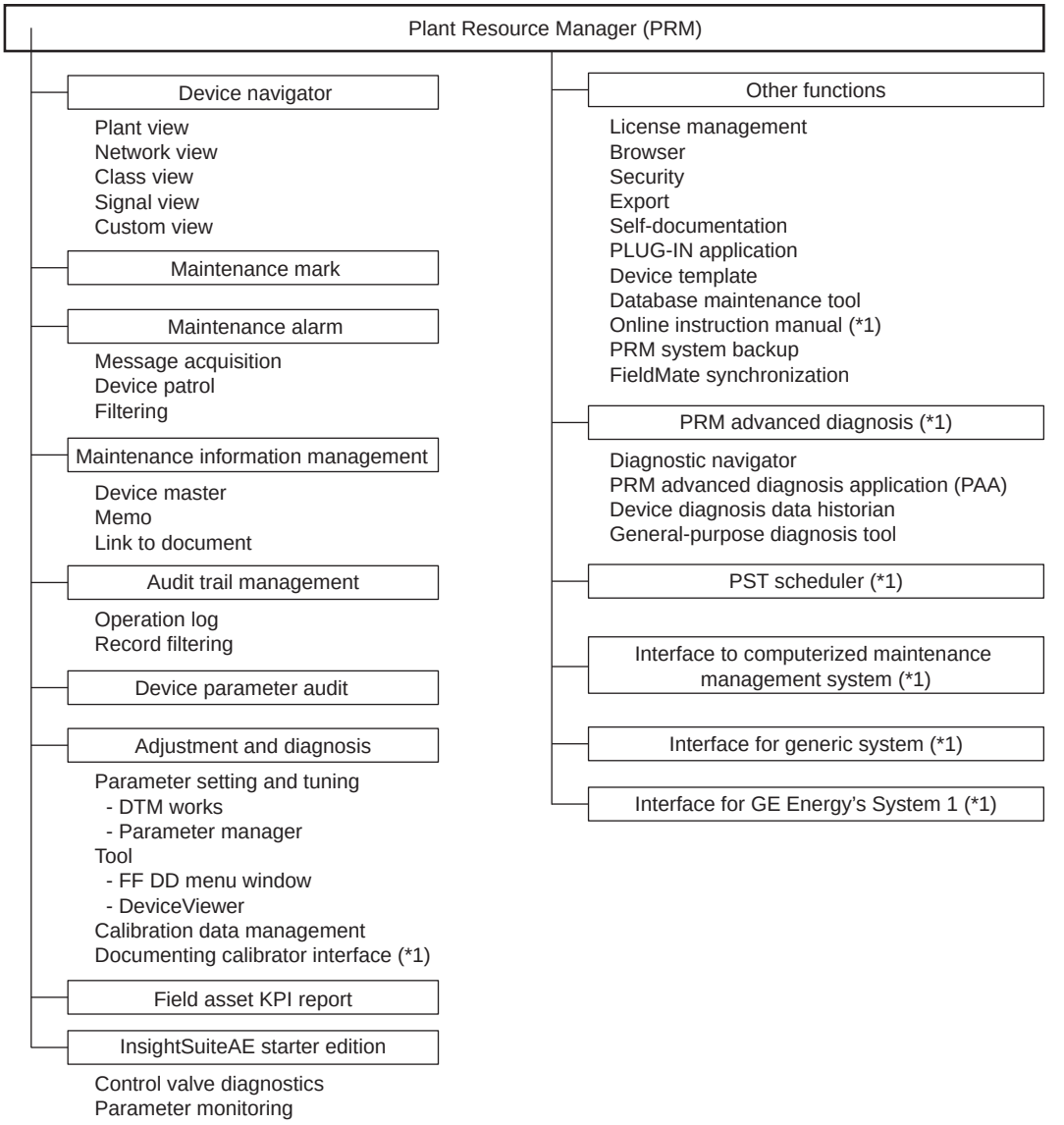

*1: Additional license is required

Figure Organization of functions

7th Edition Nov. 1, 2020 (YK)

● Device navigator

Four different views - plant view, network view, class view, signal view, and custom view – are provided.

Each view displays field devices in a plant in the Windows explorer format. In these views, device status and device priority are shown with icons so that operators are able to judge the maintenance priority of the devices at a glance. Where there are devices with unacknowledged maintenance alarms, unacknowledged alarm icons are displayed.

User accesses can be restricted based on the device navigator hierarchy, which prevents an unauthorized personnel from operating devices by mistake.

Plant view
Facilities and equipment in the plant in hierarchy tree view according to the actual structure of the plant or the plant layer are displayed. Not-in-use devices can be allocated either to the “Spare” folder for spares and failed or in-service devices to the “Out of service” folder.

Network view
The network hierarchy of field devices connected to the field network is displayed.

Class view
Field devices by vendors, models, and revisions are displayed. Users can identify the status of how spare devices are used while devices-in-use are failed or under maintenance. Device templates can be created using this function.

Signal view
Based on the field device diagnosis result, field devices which are either having operational problem or requiring maintenance are displayed in a table sorted by the status signals. Only the field devices that require maintenance can be shown on the list sorted by the category, which enables to maintain the field devices knowing the priority. Four status signals - “Failure”, “Check Function”, “Out of Specification”, and “Maintenance Required” - are provided based on the NE107 recommended by NAMUR.

Custom view
User-created views can be created and displayed in the hierarchical structure. Field devices can be categorized by persons in charge of maintenance, inspection or replacement schedule, operation or failure status, and so on.

● Maintenance mark

Maintenance marks are assigned electronically to each device to let maintenance engineers identify status of a device. The maintenance marks are enabled to link with CENTUM’s operation marks so that maintenance engineers and operators can share the same information and coordinate their work.

● Maintenance alarm function

A message system to notify maintenance information and information necessary for field device maintenance to all the maintenance engineers. The information contains not only messages generated by the field devices, but also attributes such as message information, phenomenon, causes, and actions. Alarms generated by diagnostic functions can also be delivered to the users.

Message acquisition
Messages from field digital devices as well as event messages generated by CENTUM, STARDOM ProSafe-RS, and third-party systems are acquired. User-defined information such as event priorities, objective information, phenomenon, causes, and actions are automatically added to the original event messages, which are acknowledged as maintenance alarms, and passed on to the filtering function.

Device patrol
Field device status provided by device’s self - diagnostics are acquired to generate maintenance alarms with the user-defined attributes such as message priorities, objective information, phenomenon, causes, and actions. These maintenance alarms are handed over to the filtering function. Data acquisition is performed periodically or on demand. Information from devices which do not generate alarm messages by themselves can also be acquired.

Filtering function
All the alarms generated by message acquisition, device patrol, advanced diagnostic application, and manually-entered messages are filtered and the results are notified to by each user.

● Maintenance information management

PRM acts as a central database for device maintenance information.

Device master
A list of field devices is generated and managed with all the relevant information. The list of all the registered field devices and detailed information of the individual field devices can be displayed. I/O configuration of CENTUM VP and ProSafe-RS can automatically be ganerated in PRM eaqually with AD Suite by reading a data in AD Suite using device path. Field devices with field communication function can be added automatically to the device list by plug & play when the devices are recognized.

Memo
Details of inspection, maintenance, and servicing tasks performed on a device or at a plant are included. Comments and remarks by maintenance engineers during servicing or maintenance can also be included as the service logs.

Document links
Field device related documents such as plant structures (e.g. P & ID and control drawings), component spare parts list, online instruction manuals, and device images are freely allocated and enables users to access them by the device tag name as keys. These documents can be stored in a document server on an Ethernet and accessed by URL addresses.

● Audit trail management

Historical records of PRM operations, inspection records, and event information generated by the maintenance alarm function are managed and displayed on the PRM client. These historical records can be shown in chronological orders, device priority, or message priority. The records can also be displayed filtering by the device IDs or device tag names.

● Device parameter audit

By comparing parameters of field devices enable to check their differences and confirm the changes.

● Adjustment and diagnostic functions

Online adjustment and diagnostic functions of field devices are supported.

Parameter tuning and comparison
Device parameters can be set and displayed online. This function enables PRM to compare the saved parameters with actual ones. The parameter set values are saved as logs. The device data can be uploaded and stored to the database at any time. PRM also supports one-time uploading of all the connected devices.

PRM Advanced Diagnostic Function: for FOUNDATION™ Fieldbus and HART
PRM conducts advanced diagnostic analysis for field devices.

Tools
DD menu: for FOUNDATION™ Fieldbus
Using DD files provided by vendors, PRM implements device diagnostics and parameter tuning and setting, and calibrations. The specifications of the DD files are different by the field devices.
DeviceViewer: for FOUNDATION™ Fieldbus, HART and ISA100.11a
A PLUG-IN application to display results of field device self-diagnosis. Most of the field devices hold self-diagnostic results as the vendor-specific parameters. The DeviceViewer reads those self-diagnostic results and displays them in user-friendly ways. The DeviceViewer also displays field device information which is usually displayed on the LCD of the devices, which enables users to remotely monitor the devices connected to PRM without viewing the local LCDs.
DTM Works: for FOUNDATION™ Fieldbus, HART, PROFIBUS and ISA100.11a
Using device DTMs provided by vendors, PRM implements device diagnostics and parameter tuning and setting, and calibrations.

Calibration data management
The device calibration data are managed and maintained by the PRM. Calibration results, differences, and judgment (pass or fail) are registered to the database and displayed on a PRM client. The calibration data approval function allows only the authorized person to modify the calibration data once it is approved. The modification of the calibration data is recorded as an operation history by the historical operation management function.

When the documenting calibrator is used as an optional function, the calibration data can be upload/download via communication. The calibration results are automatically saved into the database. The documenting calibrator connection is provided as optional. In order to use the documenting calibrator, “Documenting calibrator interface” (PM4S7711) should be needed.

● Field asset KPI report

This tool provides service solutions for plant equipment such as status monitoring, performance diagnosis, and efficiency improvements. Using the intelligent functions of the field devices, the tool acquires device status, availability, number of alarms & events, and their rankings to automatically create the KPI report. The report helps operators to grasp the overall status of the field devices with their own eyes. The KPI report also helps make maintenance plans with priorities depending on the device conditions.

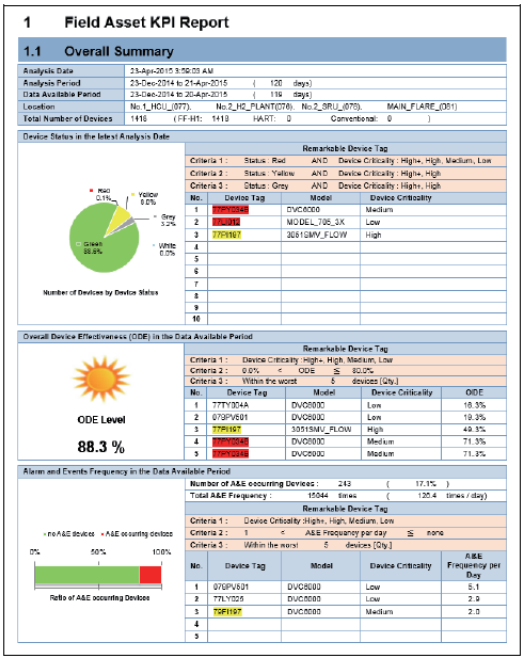

F13E.ai

Figure Field Asset KPI Report for PRM

● InsightSuiteAE Starter Edition

It is a function of Yokogawa's software called "Field Asset Analytics InsightSuiteAE (ISAE)" which visualizes a circumstance of plant and field devices on-line that incorporates with PRM. It enables to identify plants or device as abnormal condition by using ISAE's diagnostic function and tools which can be used while a plant is running. It's able to maintain and upgrade at the right moment for plant and devices because its functions and tools helps to figure out the maintenance period of plants and devices. Also, by utilizing a result of diagnostic, it analyzes a damage trend and reduce unnecessary maintenance work. Thus, it can monitor the plant integratively by combining both diagnostic functions of ISAE and PRM. In ISAE starter edition, control valve diagnostics and parameter monitoring are available. Its maximum number of devices is up to 25 devices. If more than 25 devices are needed, and other functions of ISAE are needed, ISAE is needed to be purchase. For details of ISAE, refer to the GS "Field Asset Analytics InsightSuiteAE" (GS 43D02T03-02EN).

Control valve diagnostics
It is a function to diagnose a many kind of control valves. It is vender and device free which enables to diagnose multiple valves by its integrated standard to enable to find which valve has basic problems.
In the control valve diagnostics, the date which the threshold which will be exceeded can be predicted by Failure Predicting function (*1).

*1: This function can be used from R4.04 or later.

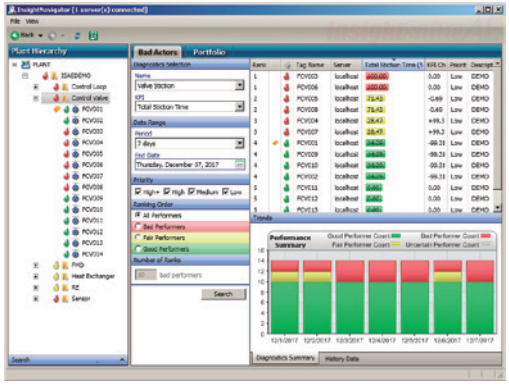

F16E.ai

Parameter monitoring
It monitors parameters of field devices which have a function of degital communication, such as pressure transmitter. It compares between multiple devices which enables to find and identify the abnormal point.

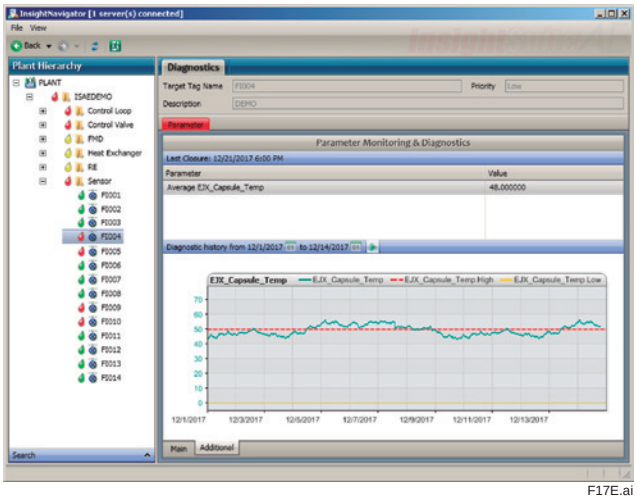

F17E.ai

● Other functions

License management
PRM software license can be managed per project ID license (PM4CPJT) in license manager.
For more details of PM4CPJT, please refer to the GS “Project ID license” (GS 30B05A01-01EN).

PRM device license (PM4S7100)
This license can be defined the number of field devices managed by one PRM server.
Depending on the quantity of PM4S7100 (1000 devices / 1 license) allocated by the license manager, the number of connected devices that can be merged for each PRM server is decided.

Product maintenance license and upgrade license
This product maintenance license is a license that supports maintenance of the functions of standard software running on a customer’s system. For details, please refer to GS 30A01F10-01EN.
From PRM R4.01, upgrade license is required to revise software for revision-up and applying a patch. These upgrade licenses are attached to the product maintenance license. For details, please refer to the GS 30B01A10-01EN.

Browser
A specific device can be searched by the device attributes information as keywords such as device ID, device tag name, device tag comments, block name, and parameters.

Security
For maintaining field devices, only the authorized personnel is allowed to access PRM or the scope of work is limited to prevent troubles caused by miss-operations from happening or secure system safety.

A user name is used to identify the user and the user name is recorded to the operation records. The user operations and its privileges are restricted by the user group where they belong.

By using the device security function, field devices can be displayed on the device navigator only for the specified user group.

Export
A device list (device ID, device tag name, device tag comments, etc.) registered to the PRM database can be exported as a text file in CSV file format so that the PRM's device information can be utilized by other software such as asset management.

Self-documentation
The data stored in the PRM database can be output in a document format to let the users manage device-related information electronically and print out on demands. The information displayed on each window can also be printed out in a format to be used as a maintenance report.

The following printing properties can be edited.

- Printing range
- Table of contents
- Header/footer
- Cover page

PLUG-IN applications
A PLUG-IN application is Yokogawa or a third-party software program that runs on a PRM client computer. Field devices and PRM database are accessed via PLUG-IN application library.

Supported PLUG-IN applications:
- DeviceViewer
- Other third party PLUG-IN applications approved by Yokogawa.

Device template function
Templates are provided with which a user can define device information of its own. These templates help simplify engineering work of individual device settings.

Database maintenance tool
PRM's database size increases in accordance with the number of field devices connected. Historical records of parameters also increase over a long period of operations. This tool helps tuning and optimizing the PRM database to be used efficiently. The data can also be maintained easily.

Online instruction manual
All the instruction manuals are provided as "PRM R4 software media" (PM4CKM) in PDF format on a DVD-ROM. "Electronic instruction manual" (PM4S7400) is also needed to be able to view and print the electronic instruction manuals on-demand.

PRM system back-up
Users can back up and restore the PRM System based on the user environment. Registry information, PRM database, advanced diagnosis database and so on can be backed up.

FieldMate synchronization
This software can be performed to adjustment, set, and management for field device via a computer to record device information in case maintenance work execute. By synchronize devices data each of PRM and FieldMate, this can be downloaded FieldMate backup data and can be managed historical data which adjusted by FieldMate through PRM.

● Supported functions

PRM's supported functions differ by the kinds of field devices. The relationship between the field devices and their complied functions are as shown below.

Table Supported Functions

Function		Conventional Devices (*1)	FOUNDATION™ Fieldbus	HART (*2)	ISA100.11a (*3)	PROFIBUS (*4)
Device navigation function	Plant view	XX	XX	XX	XX	XX
	Network view	N/A	XX	XX	XX	XX
	Class view	XX	XX	XX	XX	XX
	Signal view	N/A	XX	XX	XX	XX
	Custom view	XX	XX	XX	XX	XX
Maintenance mark		XX	XX	XX	XX	XX
Maintenance alarm	Message acquisition	N/A	XX	XX	XX	XX (*5)
	Device Patrol	N/A	XX	XX	XX	XX
	Filtering function	N/A	XX	XX	XX	XX
Maintenance information management	Device master	XX	XX	XX	XX	XX
	Plug & Play	N/A	XX	XX	XX	XX
	Register device path from AD Suite	N/A	XX	XX	N/A	N/A
	Register from host file set	N/A	XX	X	N/A	X
	Memo	XX	XX	XX	XX	XX
	Link to document	XX	XX	XX	XX	XX
Audit trail management	Parameter history	N/A	XX	XX	XX	XX
	Inspection memo history	XX	XX	XX	XX	XX
	Operation history	XX	XX	XX	XX	XX
Device Parameter audit		N/A	XX	XX	N/A	N/A
Adjustment and diagnosis	Parameter tuning and comparison	N/A	XX	XX	XX	N/A
	Status display	N/A	XX	XX	XX	XX
	Tool	N/A	XX	XX	XX	XX
	Calibration	N/A	XX	XX	N/A	N/A
Others	Browser	XX	XX	XX	XX	XX
	Security	XX	XX	XX	XX	XX
	Printing	XX	XX	XX	XX	XX
	PLUG-IN application	N/A	XX	XX	XX	N/A
	FieldMate synchronization	XX	XX	XX	XX	XX

XX: Supported X: Partly supported N/A: Not applicable

*1: The conventional devices refer to 4 to 20 mA analog devices and static devices such as heat exchangers.
*2: HART 5, 6, and 7 are supported, but Wireless HART is not supported.
*3: Conforms to ISA 100.11a wireless system for industrial automation. (ISA = International Society of Automation)
*4: Condition monitoring with device navigator is available for PROFIBUS PA device which conforms to PA profile. To find out if the devices conform to PA profile, visit the PROFIBUS International web site or its device vendors.
*5: PROFIBUS device event messages are acquired via ALP111 or ALP121 PROFIBUS-DP communication module.

■ SECURITY MEASURES

● Endpoint security service

Endpoint security service reduces the risk of viruses infecting computers and provides support for maintaining the health of the control system throughout the plant's lifecycle. Endpoint security service provides services such as AV/OS implementation service, AV/OS update service, virus check service, and software backup service. For details, refer to the GS "Endpoint security service" (GS 43D02T30-02EN).

Anti-virus software

The anti-virus software is dedicated for Yokogawa control systems based on the McAfee's intrusion prevention technologies. This product is used as standard anti-virus software for Yokogawa IA systems. For the details, refer to the GS "Endpoint Security Service" (GS 43D02T30-02EN).

■ PRODUCT OVERVIEW

Plant Resource Manager (PRM) consists of the following components:

● License manager

This software which are enabled to license management is installed automatically to a computer when PRM R4.01 or later is installed. License manager which is possible to install independently into a computer can be managed each software license of PRM based on a project ID which is 8-digit number starts with “PM.”

For more details, refer to the GS “PRM R4 Project ID License” (GS 30B05A01-10EN).

● PRM server

- Maintenance related data such as device status, device parameters, device alarms, and inspection memo of the field devices are collected and stored.
- Centralized device information such as device master, inspection schedules and records, user-created electronic documents, and parts lists are generated and managed as database.
- Maintenance alarms for field devices are generated with attributes such as problem, cause, and action, and these alarms are notified to the people who need them.

● PRM client

- Device navigator windows in hierarchy tree view are provided for monitoring and managing field devices.
- Automatic device recognition and registration (plug & play) are performed by using full digital, bi-directional, field digital networks such as Foundation Fieldbus, HART, PROFIBUS, and ISA100.11a. Monitors device health status with maintenance alarms and communication errors. With PRM Advanced Diagnostic Function, the PRM also performs device status diagnosis, device parameter setting using device diagnostic tools (i.e. DeviceViewer, DTM Works, and DD menu).
- Status icons are displayed reflecting the communication and device status to let operators grasp the device status intuitively. Status icons appear for the devices with unacknowledged maintenance alarms (of the device health status).
- A status signal of a field device complying with NAMUR NE107 specifications is displayed on the Signal view of the Device navigator. The NE107 is a recommendation for self-monitoring and diagnosis of field devices published by NAMUR, an international user association of automation technology in process industries headquartered in Germany.
- Device icons displayed on the device navigator can be freely defined by a user. The user can customize those fonts and icons out of three choices depending on the user requirements and the screen size.
- Maintenance marks are a kind of flags to be assigned to devices for setting and checking maintenance status. The maintenance mark icon is displayed upon setting, and enables to temporarily change device access level. The maintenance marks can also be linked with CENTUM’s operation marks so that the maintenance engineers and operators can share the same information and coordinate their work.
- Online device adjustment/setting are performed on screen using the same user interface with FieldMate versatile device management tool which is an on-site device adjustment/setting tool.
- Parameters and maintenance information between the PRM and the FieldMate can be exchanged.
- PRM advanced diagnosis application, device diagnosis data historian, and general-purpose diagnosis tool for PRM advanced diagnosis function are provided, in addition to the maintenance alarm function and device diagnostics function.
- Registration of conventional analog field devices as well as field digital devices such as Foundation Fieldbus, HART, PROFIBUS, and ISA100.11a can be performed for a true, centralized device management.
- Third-party calibration and diagnostic software tools as PLUG-IN applications can be performed. DeviceViewer (*1) and PLUG-IN ValveNavi (*2) are available from Yokogawa.
- FDT/DTM (Field device tool/Device type manager) and EDDL (Electronic device description language) technologies that enable the PRM to interface with field devices are supported. DTMs of FDT1.2 and FDT2.0 are supported.

*1: A field device information and its status signal complying with NAMUR NE107 are displayed on the DeviceViewer. The DeviceViewer is a PLUG-IN application of the PRM client and it can be displayed on CENTUM VP HIS. To let only the DeviceViewer run on the HIS, DeviceViewer for HIS has to be installed.

*2: This application is discontinued in Dec. 31, 2019.

● Field communications server

This software is to set and acquire field device data online. The field communication server provides information such as device status monitoring, device adjustment, and device diagnosis to the maintenance support application.

Connecting with field devices
Following methods are available to connect with field devices.

- FOUNDATION Fieldbus Communication Modules for CENTUM VP
- AI/AO modules or analog digital I/O module with HART communication for CENTUM VP
- PROFIBUS-DP communication module for CENTUM VP
- Foundation Fieldbus Communication Modules for STARDOM
- AI/AO modules with HART communication for STARDOM
- PROFIBUS communication module for STARDOM
- AI/AO modules or analog digital I/O modules with HART communication for ProSafe-RS
- NI-FBUS card
- 3rd party HART multiplexers (Pepperl and Fuchs, MTL, ELCON, or STAHL)
- 3rd party PROFIBUS communication devices (CommunicationDTM/GatewayDTM communications)
- Field Wireless Access Point and Field Wireless Management Station (CommunicationDTM/GatewayDTM communications)

● Multiple server switchover

PRM can manage field devices that are controlled by a CENTUM VP, ProSafe-RS, or STARDOM project. PRM can also monitor a large-scale project which is geographically distributed in remote locations at a single location. For the large-scale project where tens of thousands of field devices are installed, dividing them into multiple numbers of PRM servers is inevitable. PRM's multiple server function enables to select which PRM server is referred to by a PRM client. In this way, a single PRM client can monitor several PRM servers.

● PRM advanced diagnosis server function

This server function provides an environment for executing diagnostic algorithms by utilizing field device parameters. For details, refer to the GS "PRM advanced diagnosis server" (GS 30B05A21-01EN).

● PST scheduler package

PST (*1) stands for a partial stroke test. The PST scheduler package schedules PST, automatically executes PST according with the schedule, and manages the results in unified manners. Functions to modify the planned schedules and switch PST execution from automatic to manual are available.

For details, refer to the GS "PST Scheduler Package" (GS 30B05A23-01EN).

*1: By slightly operating emergency shutdown (ESD) valves online which are not activated under normal conditions, PST is to check if ESD valves function correctly in case of emergency. By using PST, the interval period between full stroke tests can be prolonged without disturbing the safety of the ESD valves, thus the maintenance cost for those ESD valves can be reduced.

● Interface for Computerized maintenance management system

PRM has an interface with Maximo Asset Management, a computerized maintenance management system (CMMS), from IBM Software, Inc. With this interface, PRM can provide maintenance information to the maintenance management system online.

For details, refer to the GS "Interface for CMMS" (GS 30B05A20-01EN).

● Interface package for generic system

Interface package for generic system is a software license which connects between PRM and 3rd party's system or Yokogawa's cavitation detection system. A result of cavitation detection system can be monitored on PRM during plant running. For details, refer to the GS "Interface package for generic system" (GS 30B05A24-01EN).

● Interface for GE Energy's System 1®

PRM can provide a single monitoring window for diagnosis of turbines, rotating equipment and reciprocating equipment under management by GE Energy's System 1 optimization and diagnostics software platform in addition to field devices such as pressure transmitters and flowmeters.

For details, refer to the GS "Interface for GE Energy's System 1" (GS 30B05A22-01EN).

■ SYSTEM CONFIGURATION

PRM manages information of field devices per PRM server. The PRM system can be configurable in scalable ways – a minimum system consists of a PRM server, a Field communications server, and a PRM client all resided in a single computer, or a large system with multiple clients.

● System configuration

CENTUM VP

Examples of PRM system configurations are shown in this section.

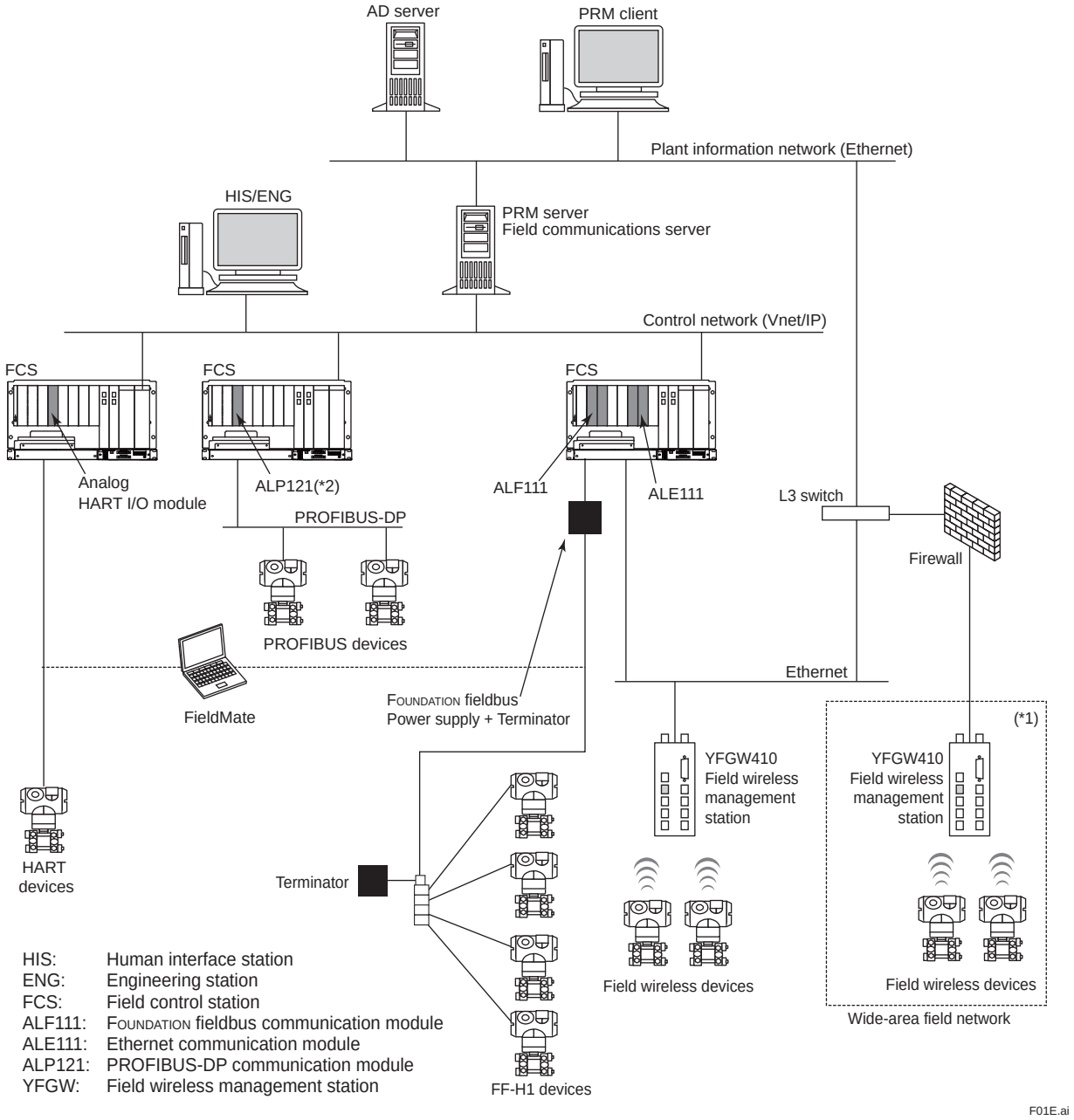

Note: A PRM server, a PRM client and a field communications server can run on a single computer.
A PRM client of PRM R4.02 or later can run on a single computer where a HIS/ENG of CENTUM VP R6.06 or later is installed.
A PRM server or a field communications server cannot run on the same computer where HIS/ENG is already installed.

*1: Process data and diagnosis status can be displayed on an HIS.
As for configuration of ISA100.11a field wireless, refer to the GS “Field Wireless System Overview” (GS 01W01A01-01EN).

*2: ALP121 is supported by CENTUM VP R5.02 or later revision. However, PRM client cannot be co-existed with ENG in a system which includes ALP121.

Figure CENTUM VP System Configuration (for FIO)

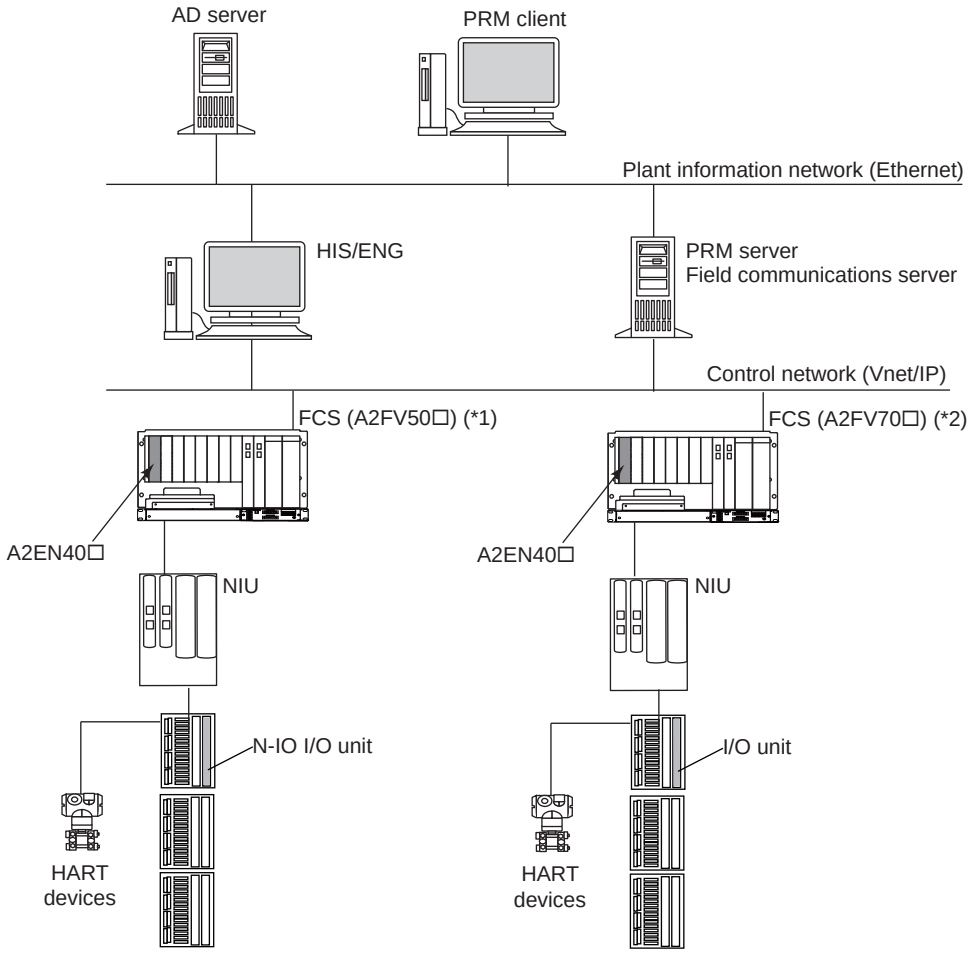

A2EN40□: N-ESB Bus coupler module
NIU: Node interface unit

F12E.ai

Note: A PRM server, a PRM client and a field communications server can run on a single computer.
A PRM client of PRM R4.02 or later can run on a single computer where a HIS/ENG of CENTUM VP R6.06 or later is installed.
A PRM server or a field communications server cannot run on the same computer where ENG is already installed.
A PRM client cannot be co-existed with HIS/ENG in a system which includes ALP121.
*1: A2FV50□ is supported by CENTUM VP R6.01.
*2: A2FV70□ is supported by CENTUM VP R6.03.

Figure CENTUM VP System Configuration (for N-IO)

STARDOM

Messages from STARDOM controllers are transmitted to a PRM server via an OPC server. FCN/FCJ OPC server for Windows (a software package) is required.

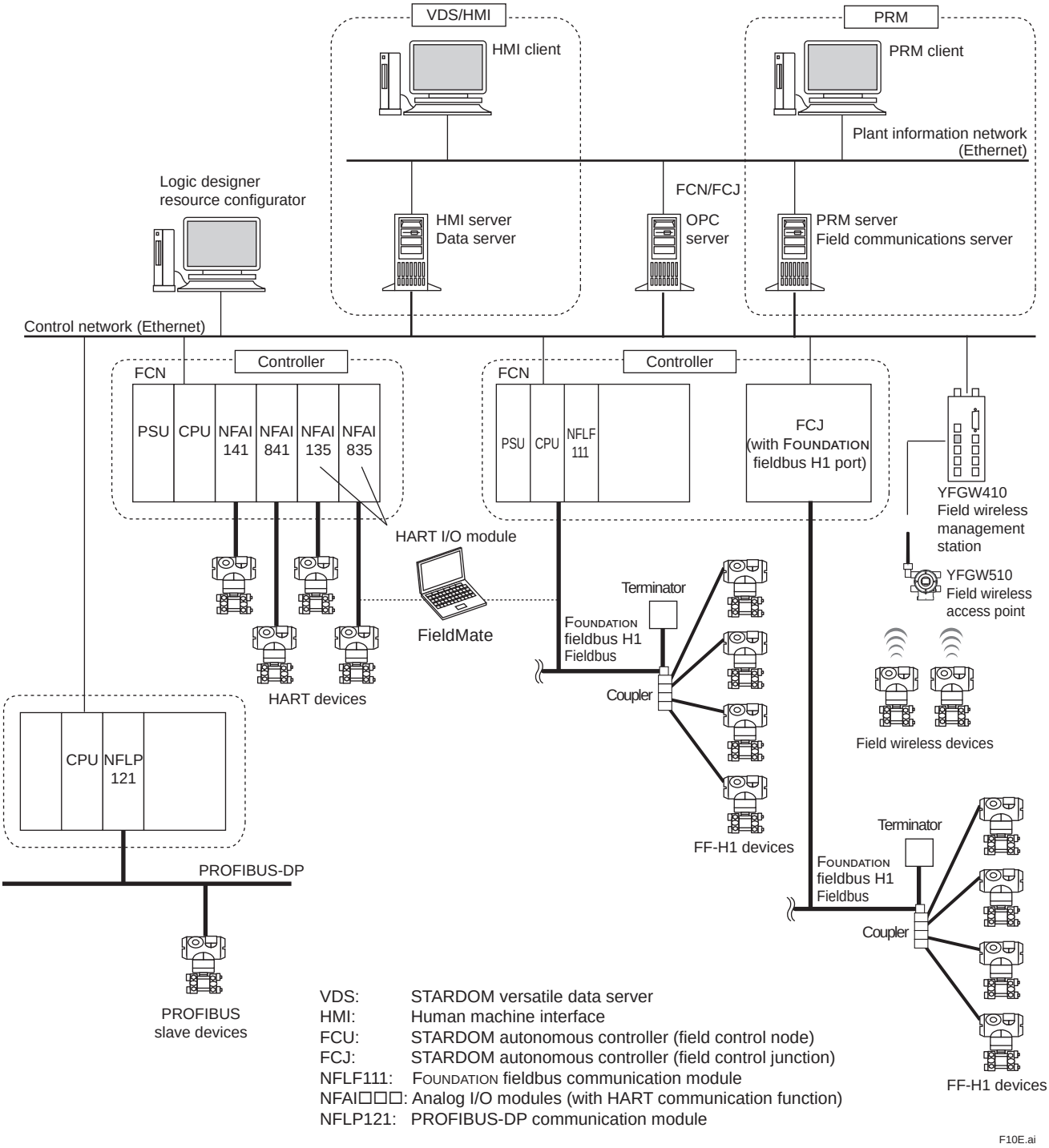

Note: A PRM server, a PRM client and a field communications server can run on a single computer.
A PRM client and an HMI client can run on the same computer.
A PRM server or a field communications server cannot run on the same computer where VDS is already installed.

Figure STARDOM system configuration

Notes for STARDOM configuration:

PRM packages cannot be installed on a computer where STARDOM versatile data server (VDS) is already installed. Installing the FCN/FCJ OPC server for Windows package on a different computer separately from the PRM packages is recommended.

Refer to the table below for combination of the software revision numbers when installing FCN/FCJ OPC server for Windows package on the same computer with the PRM. Those combinations other than shown here, FCN/FCJ OPC server for Windows must be installed on a different computer separately from the PRM packages.

	FCN/FCJ OPC server for Windows	PRM
Revision	R1.90	R3.02
	R2.20	R3.03, R3.04
	R3.01 to R3.10	R3.05
	–	R3.10
	R3.20 to R3.40	R3.11
	–	R3.12 or later
	–	R4.01 or later

Up to 100 units of FCN/FCJ controllers can be connected to a Field communications server. As for a large-scale system, multi-server function should be used to divide the number of controllers connected to a PRM server by the group of 100 units or less.

ProSafe-RS

PRM can manage HART field devices connected to ProSafe-RS's HART I/O analog modules.

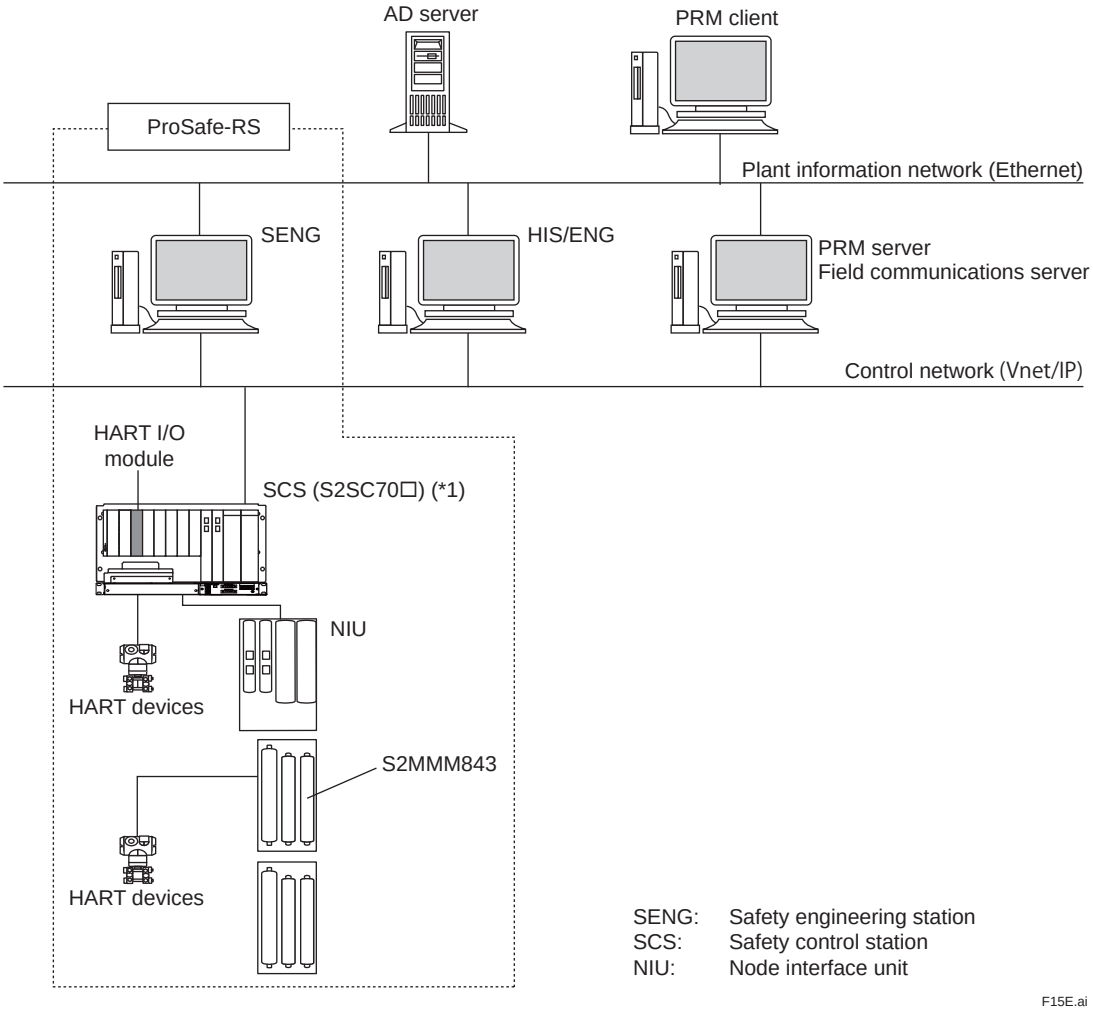

Note: A PRM server, a PRM client and a field communications server can run on a single computer in case the number of connected devices is up to 3000 devices.
A PRM server or a field communications server cannot run on the same computer where SENG is already installed.

Note: From R3.12 onwards, PRM supports Vnet/IP-Upstream where the control bus's bandwidth is 2M bps or faster. For more details, refer to the GS "ProSafe-RS Safety Instrumented System Overview (for Vnet/IP-Upstream)" (GS 32P01B30-01EN).

*1: S2SC70☐ is supported by ProSafe-RS R4.01 or later revisions and PRM R3.30 or later revisions.

Figure ProSafe-RS System Configuration

Communication with HART devices via multiplexer
PRM can communicate with HART devices via a HART multiplexer connected to the serial ports of the Field communications server.

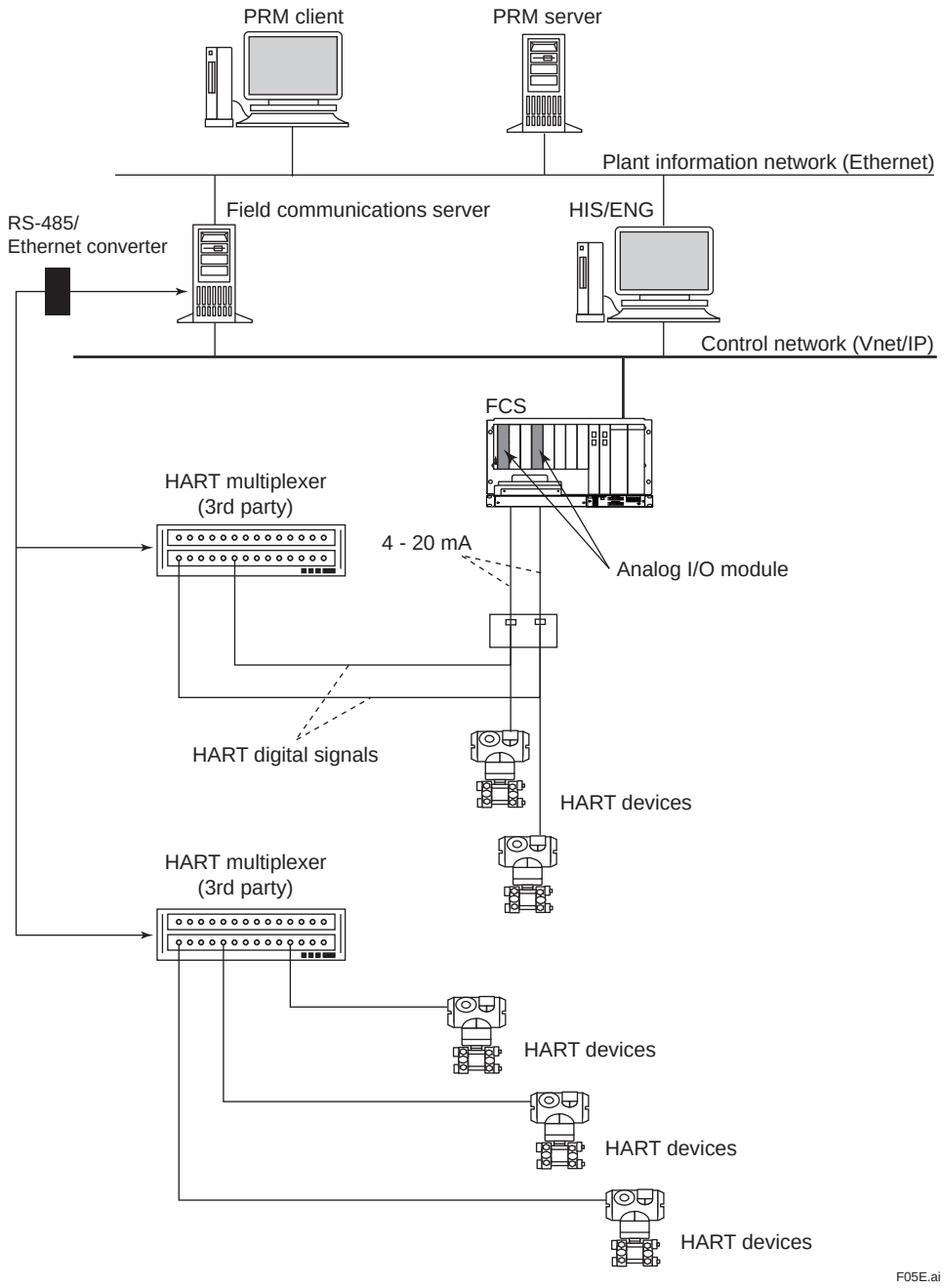

Note: A PRM server, a PRM client, and a Field communications server can run on a single computer in case the number of connected devices is up to 3000 devices.

Figure Serial port connection via HART multiplexer (Parallel connection and two-way data flow)

■ MULTIPLE SERVER SWITCHOVER

Asset management of multiple plants can be integratedly managed. A “server-set” concept has been introduced and enables a PRM client to switch from a Field communications server and a PRM server to other servers. A user has to define the server-set before use. With this switchover function, a PRM client manages all the device management information of the multiple plants at a single location.

PRM can be connected with CENTUM, STARDOM, or ProSafe-RS systems on the same Ethernet.

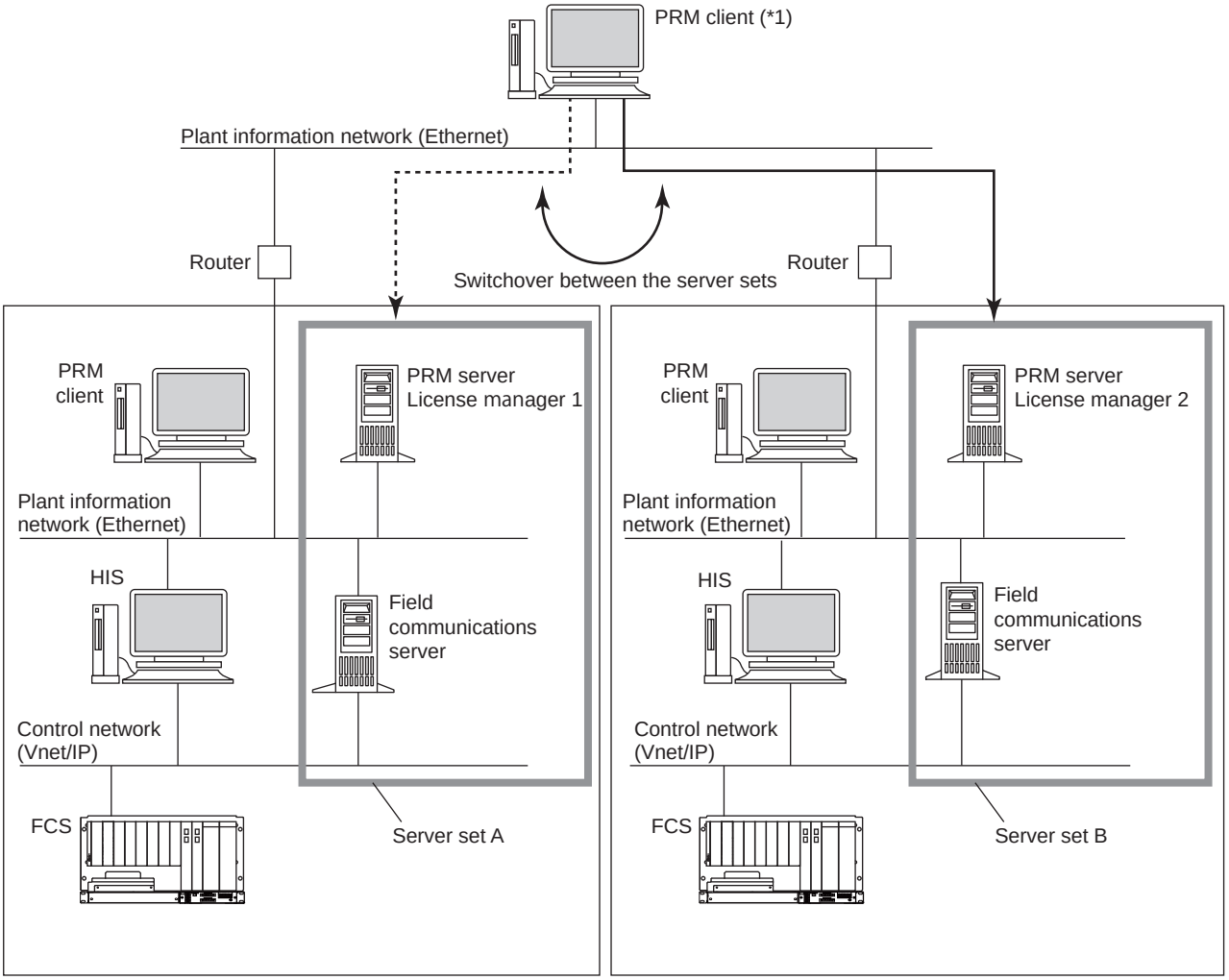

F07E.ai

*1: In case of an existing of multiple License Managers in a plant, a software license shall be assigned by a single license manager of those license managers in a plant.

Figure Multiple server switchover

■ OPERATING ENVIRONMENT

● Software requirements

PRM server, PRM client, and Field communications server

	Windows 7 Professional	Windows Server 2008 R2 Standard	Windows 10 Enterprise 2016 LTSB	Windows Server 2016 Standard	Windows 10 Enterprise 2019 LTSC
	64-bit	64-bit	64-bit	64-bit	64-bit
	SP1	SP1	non-SP	non-SP	non-SP
R4.01	X	X	X (*1)	—	—
R4.02	X	X	X (*1)	X	—
R4.03	X	X	X (*1)	X	—
R4.04	—	—	X (*1)	X	X (*2)

SP: Service pack X: Applicable —: Not applicable
*1: Windows 10 IoT Enterprise 2016 LTSB is also supported.
*2: Windows 10 IoT Enterprise 2019 LTSC is also supported.

PRM server
Internet Explorer 11.0

Microsoft SQL Server 2014 SP3 (64-bit) is used as a database software and is included in the software media (PM4CKM) for the Plant Resource Manager.

PRM client
Software for document: Adobe Reader DC

Field communication server
Driver: When PRM is connected with CENTUM VP and/or ProSafe-RS, a control network driver (Vnet/IP) is required. (*1)
For connecting with simplified system for FF-H1 device adjustment, FF-H1 Fieldbus interface card driver is required. For communicating with devices via third-party gateway devices, the third-party CommDTM/GatewayDTM are required (*2)

*1: The control network itnerface cards (VI702) are not required when communicating with HART devices via HART multiplexers and CommDTM/GatewayDTM.
*2: As for the third-party supplied CommDTM/GatewayDTM, please confirm the vendor for which OS is supported.

Field Asset KPI Report
The following Microsoft Office (Word and Excel) are needed to create a report through PRM server and to view a report via PRM client. (*1)

Microsoft Office 2019 (*2)
Microsoft Office 2016 (32-bit)
Microsoft Office 2013 SP1 (32-bit)
Microsoft Office 2010 SP2 (32-bit) (*3)

*1: None of Microsoft Office is needed to view only report created by HTML format.
*2: This is supported on Windows 10.
*3: This version is supported by R4.03 or earlier.

● Hardware requirements

The required main memory size and disk capacity depend on the number of field devices registered to the PRM. The minimum hardware requirement is described here when no more than 6000 devices are connected to a PRM server.

In case the size of the required main memory differs between the Windows OS and the PRM packages (PRM server, PRM client, and Field communications server), apply the larger of the two values.

PRM server

CPU: Refer to the table below.
Main memory: Refer to the table below.
Hard disk space: Refer to the table below.
Peripheral devices: DVD-ROM drive
Ethernet card
Display resolution/colors: 256 colors or more

Table PRM server hardware requirements (without Advanced diagnosis server)

	Number of field devices			
	300 units or less	**1000 units or less**	**3000 units or less**	**6000 units or less**
CPU	1G Hz or higher	2.8 GHz or higher	2.8 GHz or higher	2.8 GHz or higher 2 core or more
Main memory	2 GB or more	2 GB or more	2 GB or more	4 GB or more
Hard disk capacity (*1)	6 GB or more	8 GB or more of free space Use of a high-speed disk drive such as SCSI or RAID drive is recommended.	13 GB or more of free space Use of a high-speed disk drive such as SCSI or RAID drive is recommended.	23 GB or more of free space Use of a high-speed disk drive such as SCSI or RAID drive is recommended.
Device database capacity (*2)	600 MB	2 GB	6 GB	15 GB

Note: When a system configuration includes an advanced diagnosis server, refer to the GS “PRM Advanced diagnosis server (R4)” (GS 30B05A21-01EN) for hardware requirements.
Note: When a system configuration includes ISAE, refer to the GS “Field Asset Analytics InsightSuiteAE” (GS 43D02T03-02EN) for hardware requirements.
Note: In case ISAE starter edition is upgraded to ISAE R1.08 or later, 8 GB or more of main memory and 250 GB or more of hard disk capaicity are required additionally.
*1: The required hard disk capacity includes the database capacity specified in (*2).
*2: The device database capacity covers the required size for one year operation. The size is calculated with the assumption that comparing and saving the parameters of all devices and function blocks with parameter manager for five times a year.

PRM client

CPU: Pentium 1 GHz or higher
Main memory: 1 GB or more
Hard disk space: 2 GB or more
Communication unit: Ethernet card
Peripheral devices: DVD-ROM drive
Display resolution/colors: 1024 x 768 or higher, 256 colors or more

Field communications server

CPU: Pentium III 1 GHz or higher
For connecting 2000 devices or more, 2.8 GHz or higher is required.
Main memory: Refer to the table below.
Hard disk space: 3 GB or more
Communication unit: Refer to the table below.
Peripheral devices: DVD-ROM drive
Display resolution/colors: 256 colors or more

Table Hardware requirements for Field communications server

	Connecting with CENTUM VP or ProSafe-RS	Connecting with STARDOM	Connecting via NI-FBUS simplified system for FOUNDATION Fieldbus	Connecting with simplified system for HART device or HART multiplexer	Connecting via commDTM/ gatewayDTM
Main memory (*1) (*2)	• FCS/SCS 1-16 units (100+80 x number of FCS/SCS) MB or more recommended	• FCN/FCJ 1-16 units (100+60 x number of FCN/FCJ) MB or more recommended	256 MB or more required 512 MB or more recommended	256 MB or more required 512 MB or more recommended	256 MB or more required {30+(commDTM/ gatewayDTM main memory)×(No. of node)}MB or more recommended
	• FCS/SCS 17-44 units (1380+10 x (number of FCS/ SCS-16)) MB or more recommended	• FCN/FCJ 17-100 units (1060+5 x (number of FCN/ FCJ-16)) MB or more recommended			
Communication devices	Ethernet card Control bus interface card Control network interface card (VI702)	Ethernet card	Ethernet card FOUNDATION Fieldbus H1 interface card	Ethernet card COM port	Ethernet Card

*1: The specified hardware requirements do not include the requirement for third party CommDTM/GatewayDTM. Refer to the respective DTM documentation.
*2: The total memory requirement should be the sum of the memory requirement for each required function and connected system.

All-in-one configuration (when all components – PRM server, Field communications server, and PRM client - are installed in a single computer)

Number of connectable FCS/SCS:
Maximum 24 stations or less. When the number of stations exceeds 24, install PRM server and field communications server on separate computers.
CPU: The maximum CPU capability among those required for the respective packages, or higher.
Main memory: Total sum of memory size required for the respective packages or the operating system (whichever is higher) or more.
Hard disk capacity:
In addition to the total sum of available hard disk spaces required for the respective packages, approx. 1 GB or more of virtual memory area is required.
Display resolution/colors: 1024 x 768 or higher, 256 colors or more

OPC server (for STARDOM system)

CPU: Pentium 300 MHz, 400 MHz, or faster recommended
Main memory: 256 MB, 512 MB, or more recommended
Disk capacity: Minimum 1 GB of free space.
Ethernet card: 100BASE-TX, 10BASE-T, 10BASE-5

For STARDOM connection, two communication devices are required to segregate information and control networks.

● Software requirements for connected system

CENTUM VP

CENTUM VP: R4.01 or later
R4.01 or later to support HART communication
R4.02.30 or later to support ISA100 field wireless communication
R4.03.00 or later to support Fast device patrol for HART
R5.03 or later to support PROFIBUS communication
R6.01.00 or later to support Event Notification of HART7 devices
R6.06 or later to support Virtualization Platform
R6.07 or later to support AD Suite Server notification
R6.07.10 or later to support Unified Alarms and Conditions Server (UACS)

For connecting with CENTUM VP, Exaopc OPC interface package (for HIS) R4.01 or later or Exaopc OPC interface package (NTPF100) R3.50 or later is required.

ProSafe-RS

ProSafe-RS: R1.02 or later
R2.20 or later to support upstream projects
R3.02.10 or later to support Vnet/IP narrowband system
R4.01.00 or later to support Event Notification of HART7 devices
R4.04 or later to support Virtualization Platform
R4.05 or later to support AD Suite Server notification

For connecting with ProSafe-RS, Exaopc OPC interface package (for HIS) needs to be R3.06 or later; and R3.07 or later to notify HIS of operator guide message. Or, use Exaopc OPC interface package (NTPF100) R3.01 or later.

STARDOM

STARDOM: R1.40 or later
R1.60 or later to support HART devices

FCN/FCJ OPC Server for Windows:
R1.40 or later
R1.60 or later to support HART devices

FieldMate

FieldMate: R3.03.10 or later to support synchronization with PRM.

■ MODELS AND SUFFIX CODES

PRM Basic Set

		Description
Model	PM4SSET	PRM R4 Set
Suffix Codes	-V	Software license
	1	Always 1
	1	English version
	N0025	With 25 devices
	N0300	With 300 devices
	N1000	With 1,000 devices
	N3000	With 3,000 devices
	N6000	With 6,000 devices

Note: Make sure to order “Project ID License for PRM R4 (PM4CPJT)” also when you first order PRM R4. PM4CPJT is not included.
Note: “A PRM R4 software media” (PM4CKM) and “a device files media” (PM4CDM) are supplied.

The following licenses are included in “PRM R4 set” (PM4SSET).

The number of connected devices		**6,000 devices**	**3,000 devices**	**1,000 devices**	**300 devices**	**25 devices**
Suffix Code		**-V1□N6000**	**-V1□N3000**	**-V1□N1000**	**-V1□N0300**	**-V1□N0025**
Function (Model)	PRM Server for 1,000 devices or more (PM4S7700)	X (1)	X (1)	X (1)	–	–
	Device License (PM4S7100)	X (6)	X (3)	X (1)	–	–
	PRM Server for 300 devices (PM4S7702)	–	–	–	X (1)	–
	PRM Server for 25 devices (PM4S7701)	–	–	–	–	X (1)
	PRM Client (PM4S7710)	X (1)	X (1)	X (1)	X (1)	X (1)
	Filed communication Server (PM4S7720)	X (1)	X (1)	X (1)	X (1)	X (1)
	Electric Document (PM4S7400)	X (1)	X (1)	X (1)	X (1)	X (1)

X: Included –: Not included
Note: The values given in parentheses next to “X” are shown the number of licenses including in a PRM set.

PRM server

		Description
Model	PM4S7700	PRM Server
Suffix Codes	-V	Software license
	1	Always 1
	1	English version

Note: “PRM server” (PM4S7700) and CENTUM VP HIS/ENG, ProSafe-RS SENG, or STARDOM HMI client cannot be installed in single computer.
Note: With field devices 3,000 or less, “PRM server” (PM4S7700), “PRM client” (PM4S7710), and “field communications server” (PM4S7720) can be installed in single computer.
Note: “Exaopc OPC interface package (for HIS)” (VP6H2411) is required to acquire device alarms and events.

PRM Device License

		Description
Model	PM4S7100	PRM Device License (1,000 devices per license)
Suffix Codes	-V	Software license
	1	Always 1
	1	English version

Note: “PRM device license” (PM4S7100) cannot be used with “PRM server for trial” (PM4S7701) and “PRM server for small” (PM4S7702).

PRM Client

		Description
Model	PM4S7710	PRM Client
Suffix Codes	-V	Software license
	1	Always 1
	1	English version

Note: "PRM client" (PM4S7710) and CENTUM VP HIS/ENG, ProSafe-RS SENG, or STARDOM HMI client can be installed in single computer. However, in such this case, PRM server (PM4S7700 / PM4S7701 / PM4S7702) and "field communications server" (PM4S7720) cannot be installed in the same computer.

Field Communications Server

		Description
Model	PM4S7720	Field Communications Server
Suffix Codes	-V	Software license
	1	Always 1
	1	English version

Note: "Field communications server" (PM4S7720) and CENTUM VP HIS/ENG, ProSafe-RS SENG, or STARDOM HMI client computer cannot be installed in single computer.
Note: With field devices 3,000 or less, PRM server (PM4S7700 / PM4S7701 / PM4S7702), "PRM client" (PM4S7710), and "field communications server" (PM4S7720) can be installed in single computer.

Electronic Instruction Manual

		Description
Model	PM4S7400	Electronic Instruction Manual
Suffix Codes	-V	Software license
	1	Always 1
	1	English version

PRM server for Small

		Description
Model	PM4S7702	PRM Server for Small (with 300 devices)
Suffix Codes	-V	Software license
	1	Always 1
	1	English version

Note: "PRM server for small" (PM4S7702) and CENTUM VP HIS/ENG, ProSafe-RS SENG, or STARDOM HMI client cannot be installed in single computer.
Note: "PRM server for small" (PM4S7702), "PRM client" (PM4S7710), and "field communications server" (PM4S7720) can be installed in single computer.
Note: "PRM server for small" (PM4S7702) cannot be used with "PRM device license" (PM4S7100). TOKUCHU is needed to add the number of field devices.
Note: "PRM server for small" (PM4S7702) can be placed order only as "PRM set (with 300 devices)" (PM4SSET-V11N0300).

PRM server for Trial

		Description
Model	PM4S7701	PRM Server for Trial (with 25 devices)
Suffix Codes	-V	Software license
	1	Always 1
	1	English version

Note: "PRM server for trial" (PM4S7701) and CENTUM VP HIS/ENG, ProSafe-RS SENG, or STARDOM HMI client cannot be installed in single computer.
Note: "PRM server for trial" (PM4S7701), "PRM client" (PM4S7710), and "field communications server" (PM4S7720) can be installed in single computer.
Note: "PRM server for trial" (PM4S7701) cannot be used with "PRM device license" (PM4S7100). TOKUCHU is needed to add the number of field devices.
Note: "PRM server for trial" (PM4S7701) can be placed order only as "PRM set (with 25 devices)" (PM4SSET-V11N0025).

Documenting Calibrator Interface

		Description
Model	PM4S7711	Documenting Calibrator Interface
Suffix Codes	-V	Software license
	1	Always 1
	1	English version
Option Code	/FLK01	For Fluke 743B/744/754

PRM R4 Software Media

		Description
Model	PM4CKM	PRM R4 Software Media
Suffix Codes	-V	DVD-ROM
	1	Always 1
	1	English version

Note: It contains two media, First (1/2) media is for install PRM R4, Second (2/2) media is for install ISAE started edition for both English and Japanese.

Device Files Media

		Description
Model	PM4CDM	Device Files Media
Suffix Codes	-V	DVD-ROM
	1	Always 1
	1	English version

Note: “Device files media” (PM4CDM) is media that data files relevant to field devices such as DD and DTM are stored.

FCN/FCJ OPC server for Windows
For more information, refer to the GS “FCN/FCJ OPC Server for Windows” (GS 34P02Q61-01E).

■ ORDERING INFORMATION

Specify model and suffix codes.

■ SOFTWARE LICENSE AGREEMENT AND LIMITED WARRANTY FOR PRM RELEASE 4

● Software License Agreement

Prior to start using the PRM Release 4 software, refer to the website below and agree on all the terms and conditions of the “PRM Software License Agreement.”

PRM Software License Agreement

http://www.yokogawa.com/EndUserLicenseAgreement/

● Limited Warranty

The PRM R4 and later versions are provided with the limited warranty which covers its software media only. Support services over vulnerability and nonconformance shall be provided by Product Maintenance License (PML) and Lifecycle Agreement from the date of handover as agreed mutually by customer and Yokogawa. For more details of PML and Lifecycle Agreement, refer to the following GS for each.

- Product Maintenance License (GS 30A01F10-01EN)
- Lifecycle Agreement “Sustainable Plan” (GS 43D02H21-16EN)

■ TRADEMARK ACKNOWLEDGMENT

The names of corporations, organizations, products and logos herein are either registered trademarks or trademarks of Yokogawa Electric Corporation and their respective holders.