General Specifications

FIELDEYEII JUNCTION BOX
JB for FIELDEYE2 Full HD

GS 85A7C03-09EN

■ OVERVIEW

The FIELDEYEII JUNCTION BOX (JB) is providing a cables termination function which are tailing from the FIELDEYE *II* main body.
As an exclusive option for the full HDIP type of the FIELDEYE *II*, the JB will widen a range of the CCTV application-space via LAN interface and compatible user's environments.

■ FEATURES

- ●A stainless steel flameproof enclosure
- ●Compact housing
- ●Easy to mount by optional accessory parts
- ●Having a threaded top cover for internal cabling.
- ●Four threaded entry ports.
- ●An optional nameplate can carve up to15 characters.
- ●A media converting function against LAN interface (E/O and O/E): Port (1) -(4)
- ●An On-or-off function against AC power line by an internal relay 1-NO(A)-contact: Port (2) -(3)

■ PORT CONFIGUREATION

Port (1)	FIELDEYEII Interface
Port (2)	AC Power Output
Port (3)	AC Power Input
Port (4)	User Interface (LAN I/F)

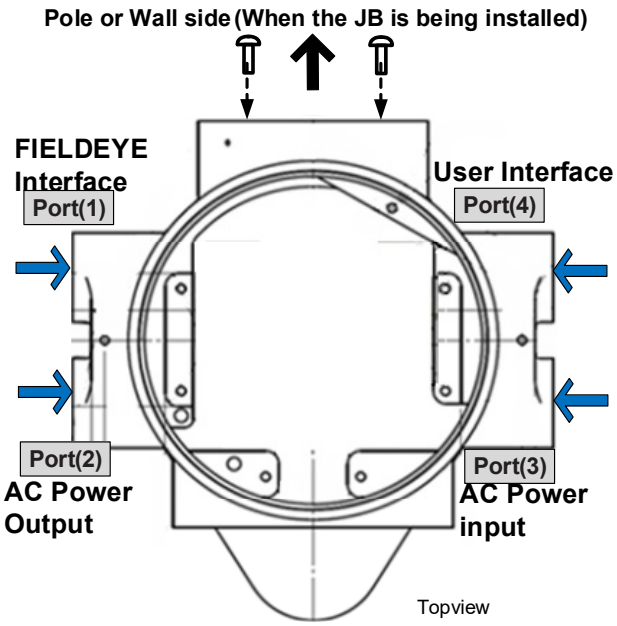

■ CABLE CONFIGUREATION

●Any cabling work should be done at the customer's side in accordance with each specific requirement or environment.

DANGER: Do not cabling work(s) against live wires, otherwise it can cause a serious accident.

●Housing Specifications

External dimensions 182 (W) x 195 (H) x 241 (D) mm
Weight 10 kg or less than
(w/o. cable glands and sealing plugs)

Operating temperature/Humidity
-40°C to +60°C/20 to 95 % (Non-condensation)
Housing Material: Die Casted SS316L Stainless steel
Finish: Electrolytic Polishing

●Ingress protection: IEC IP66 equivalent (waterproof)

● NOTE: None of tools for wiring or installing will not be attached to the product, except /CT-option(Top-lid-opener) by specified the optional code ..

GS 85A7C03-09EN
All Rights Reserved. Copyright © 2019,
5th Edition : May. 09 , 2022

■ INTERFACE SPECIFICATIONS

(1) **FIELDEYEII Interface**

Interface port for FIELDEYEII camera
Usually, FC33E/U Multiple Cable having LAN interface will be connected.

(2) **AC Power Output (by 1-a relay contact)**

Internal Normal-Open contact (NO-contact): 1-Curcuit
(This NO-contact is controlled by FIELDEYEII main body via the Port (1) above)
Output (Switching) voltage handled by NO-contact: AC100 to 240V (Rated Vale)
(This AC Power-Output is being introduced from the Port (3) below))
Note: If not used, a Sealing plug (ME3 or 2) is needed.

(3) **AC Power Input**

AC100V to 240V (Rated Value), 50Hz or 60Hz (Rated value)
NOTE: Maximal normal supply voltage is 250 V
Recommends: having a size of ≥ AWG16 as each (L, N and PE)
An AC-Power supplying source for the "AC power output (2)" above
SPD (Surge Protective Device): installed between each line (L, N and PE) internally.

(4) **User Interface**

IEEE 802.3u 100BASE-TX, 100BASE-FX
IEEE 802.3x Flow Control

Center wavelength	1310 nm
Optical fiber	9/125 µm, Single-mode
Interface connecter	SC connecter, 2-core type

Interface type selection by the OPTION-CODE:

Interface type	Connector	OPTION-CODE	Note
100BASE-FX	SC (2 Core) x1	JB-FXA1/ME2-4	Std. combination
10BASE-T,100BASE-TX	RJ-45 x1	JB-TXA1/ME2-4	An optical media converter is omitted.

■ REGULATORY STANDARDS

●Explosion Proof

Equipment: **FEIELDEYEII JUNCTION BOX**
IECEx Certificate*: Type of Protection: Flameproof "**db**",
IECEx CML **18.0019X** (IEC 60079-0:2017, IEC 60079-1:2014)
ATEX Certificate*: CML **18ATEX1025X** (**EN IEC 60079-0:2018**, EN60079-1:2014)

II 2G
Ex db IIC T5 Gb
Ta= -40°C to +60°C

f

Compatible standards: CE*
* Only when Explosion Protected type code is 1.

EU Directive and Standards
EU declaration of conformity: with requirements of following:

EU Directives	Standards
2014/34/EU (ATEX)	**EN IEC 60079-0:2018** Explosive atmospheres. Part0: Equipment-General requirements **EN60079-1:2014** Electrical Apparatus for explosive gas atmospheres-Part1: Flameproof enclosures 'd'
2014/30/EU (EMC)	**EN55032:2015+A11:2020 Class A** Electromagnetic compatibility for multimedia equipment. Emission requirements **EN 61000-3-2: 2014**, **EN IEC 61000-3-2: 2019** Limits for harmonic current emissions (equipment input current less than or equal to16A per phase) **EN 61000-3-3: 2013**, **EN61000-3-3:2013+A1:2019** Limitation of voltage changes, voltage fluctuations and flicker in public low-voltage supply systems, for equipment with rated current≦16 A per phase and not subject to conditional connection **EN50130-4:2011+A1:2014** Immunity requirement for components of fire, intruder, hold up, CCTV, access control and social alarm systems
2014/35/EU (LVD)	**EN61010-1:2010+A1:2019** (Indoor/Outdoor use, Pollution degree II, Overvoltage Category I) Safety requirements for electrical equipment for measurement, control; and laboratory use-Part1: General requirements
2011/65/EU (RoHS)	**EN IEC 63000:2018** Technical documentation for the assessment of electrical and electronic products with respect to the restriction of hazardous substances

Note: This product is designed only for use in large-scale fixed installations

GS 85A7C03-09EN
All Rights Reserved. Copyright © 2019,
5th Edition : May. 09 , 2022

■ EXTERNAL CONNECTION (EXAMPLE)

(1) Using an Optical fiber

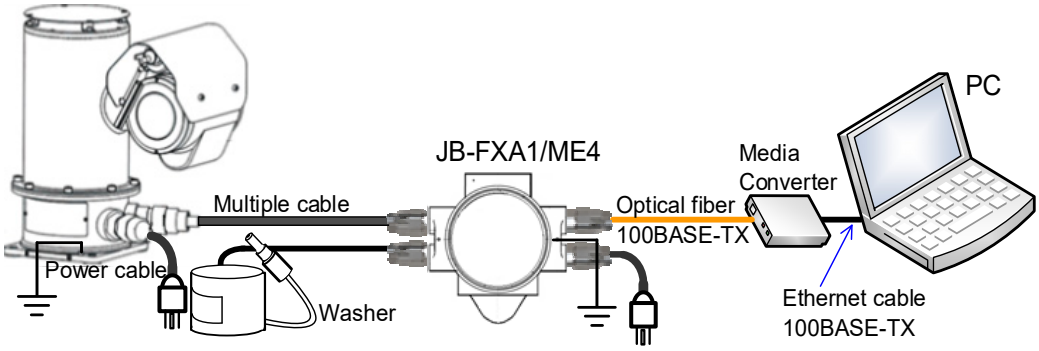

(2) Using Optical cable (without peripheral equipment)

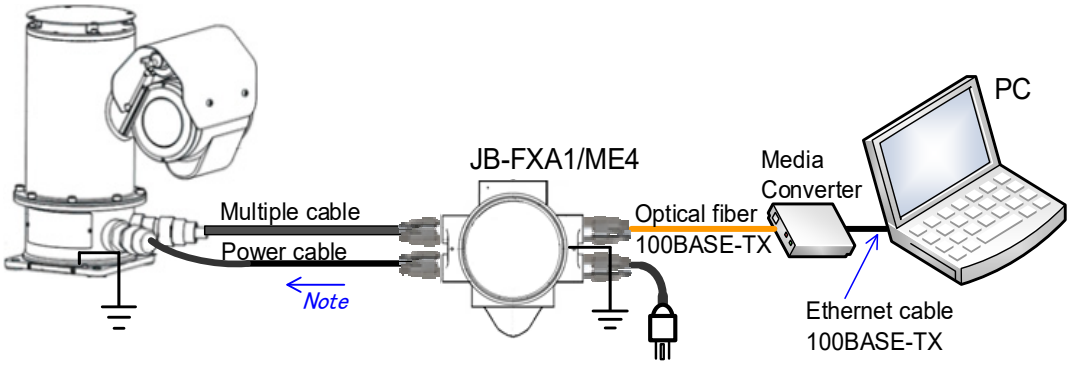

*Note: Any 1-a contact-closing-operation is **not** needed for supplying AC Power to the Main body*

(3) Using LAN cable (without peripheral equipment)

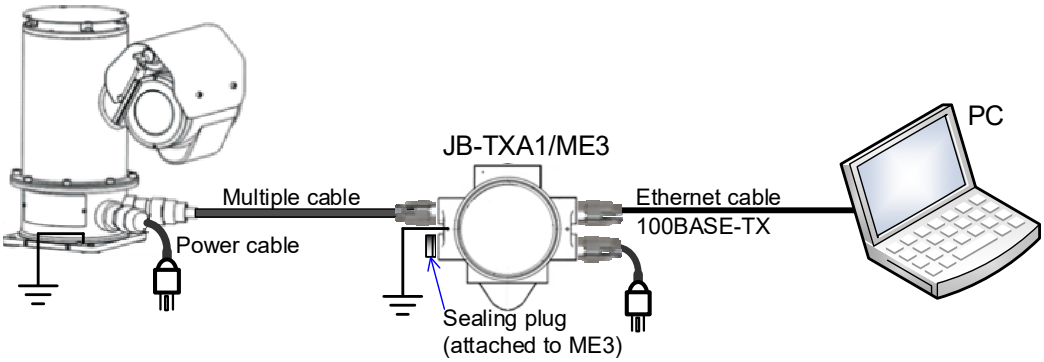

All Rights Reserved. Copyright © 2019,
5th Edition : May. 09 , 2022

■ EXTERNAL DIMENSIONS

● **JB-□FXA1/ME3 (as an example)**

Unit: mm

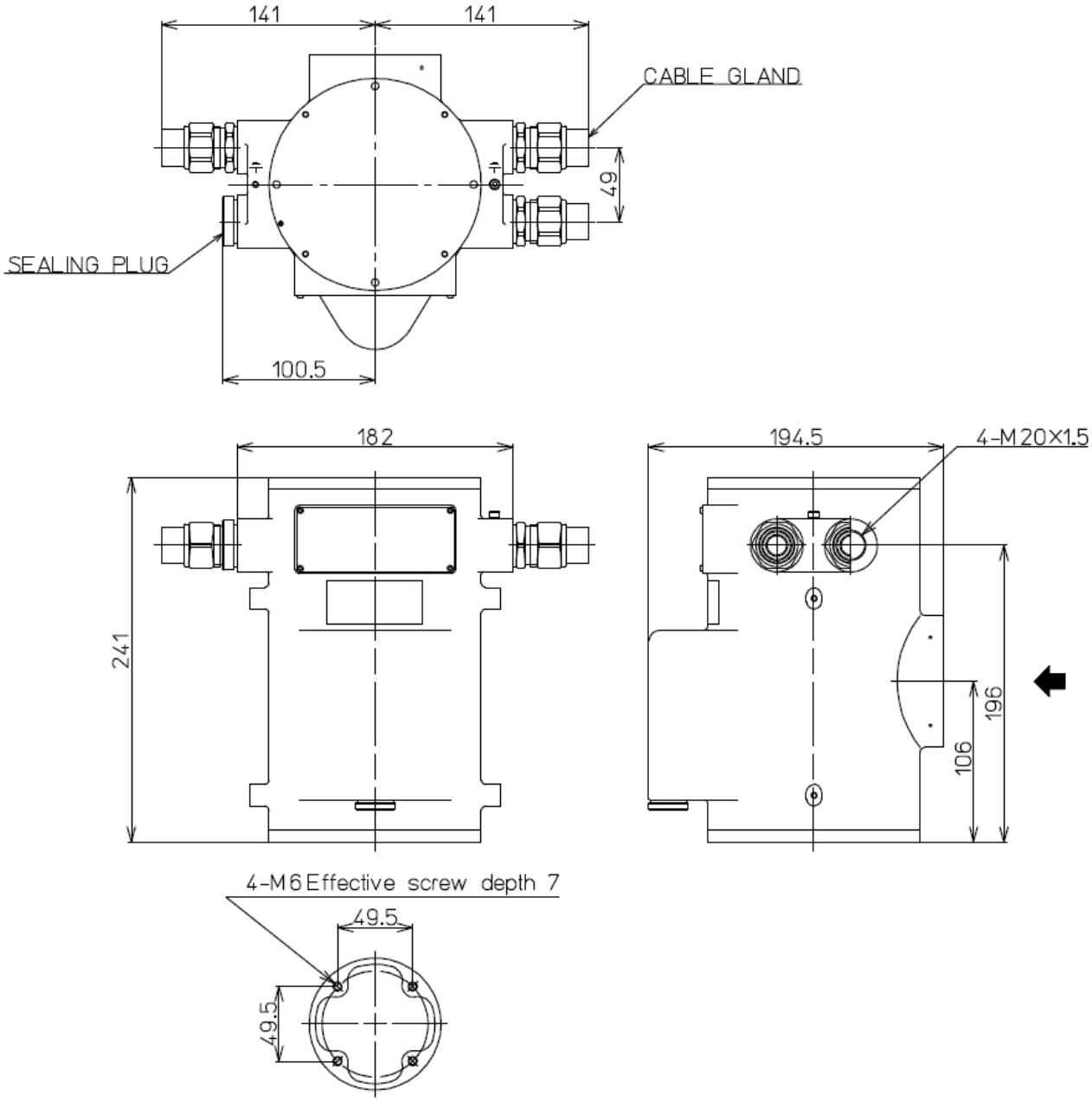

*Note1) After cabling is completed, close the Upper lid by a force of around **30N·m** so as to become securely tight.*
Note2) Do not step on the Upper lid.

.

GS 85A7C03-09EN
All Rights Reserved. Copyright © 2019,
5th Edition : May. 09 , 2022

■ EXTERNAL DIMENSIONS

● **JB-□FXA1/ME3** (w./ options /SD,/SH,/BR,/T)

Unit: mm

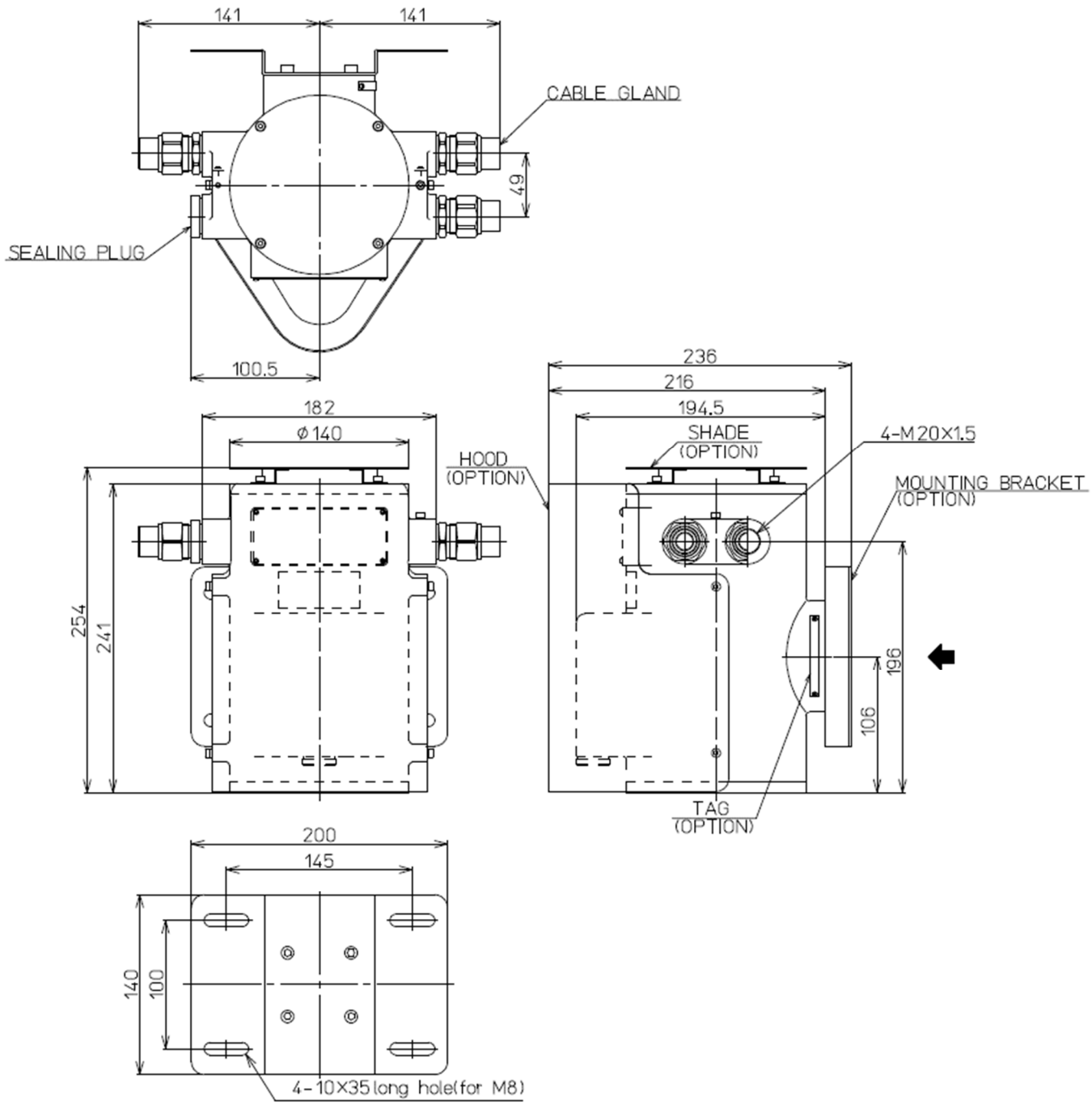

MOUNTING BRACKET

GS 85A7C03-09EN
All Rights Reserved. Copyright © 2019,
5th Edition: May. 09 , 2022

■ CABLE GLAND and SEALING PLUG

Suffix Code	CABLE GLAND	SEALING PLUG
ME2	2	2
ME3	3	1
ME4	4	0

● EXTERNAL DIMENSIONS of CABLE GLAND(Left side) and SEALING PLUG

Unit mm

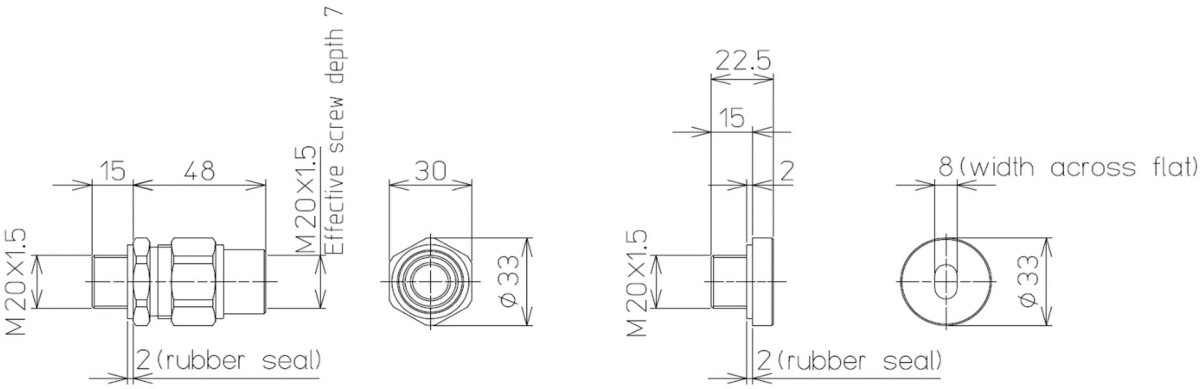

NOTES: Cable's outer diameter: **φ8.5** to **φ13.3,** for **CABLE GLAND**
NOTES: Weight: 140 gr (CABLE GLAND), 45 gr (SEALING PLUG)
NOTES: Each Cable gland and/or Sealing plug shall be screwed in at the port (1) -(4), by torque of approx.30 N m.

■ OPTION CODES

Model	Suffix Code	Option Code	Description
JB			FIELDEYEII JUNCTION BOX (JB for FIELDEYE2 Full HD)
User Interface	-FX		100BASE-FX (SC x2)
	-TX		10/100BASE-TX (RJ45 x1)
Connected to be	A		FIELDEYE2
Explosion Protected type	0		(Explosion Protection in Japan only)
	1		ATEX/IECEx Certification
Cable Glands (Ports configuration)	GE2		Set of (G1/2 type) Cable Glands of 2 and Sealing plugs of 2 (Japan only)
	GE3		Set of (G1/2 type) Cable Glands of 3 and Sealing plugs of 1 (Japan only)
	GE4		Set of (G1/2 type) Cable Glands of 4 and Sealing plugs of 0 (Japan only)
	ME2		Set of (M20 type) Cable Glands (ATEX/IECEx) of 2 and Sealing plugs of 2
	ME3		Set of (M20 type) Cable Glands (ATEX/IECEx) of 3 and Sealing plugs of 1
	ME4		Set of (M20 type) Cable Glands (ATEX/IECEx) of 4 and Sealing plugs of 0
	NNN		No Cable Glands, No Sealing plugs
Additional Specification: (top-lid-opener: /CT and accessories)		/T	Name tag plate: Up to 15 letters (alpha-numeral combination code) can be specified
		/CT	Top lid-Opener for JB
		/SD	Shade
		/SH	Side cover
		/BR	Mounting Bracket

All Rights Reserved. Copyright © 2019,
5th Edition : May. 09 , 2022