User's Manual

Model Y/11DM Pneumatic Differential Pressure Transmitter

IM 02C01B06-01E

vigilantplant®

YOKOGAWA

Yokogawa Electric Corporation

IM 02C01B06-01E
9th Edition

Model Y/11DM
Pneumatic Differential Pressure Transmitter

IM 02C01B06-01E 9th Edition

CONTENTS

9th Edition: Feb. 2013 (KP)

1. Introduction

Thank you for purchasing the Yokogawa's instrument.

The instrument is correctly calibrated at the factory before shipment. To ensure correct and efficient use of the instrument, please read this manual thoroughly and fully understand how to operate the instrument before operating it.

■ Regarding This Manual

- This manual should be provided to the end user.
- The contents of this manual are subject to change without prior notice.
- All rights reserved. No part of this manual may be reproduced in any form without Yokogawa's written permission.
- Yokogawa makes no warranty of any kind with regard to this material, including, but not limited to, implied warranty of merchantability and fitness for a particular purpose.
- If any question arises or errors are found, or if any information is missing from this manual, please inform the nearest Yokogawa sales office.
- The specifications covered by this manual are limited to those for the standard type under the specified model number break-down and do not cover custom-made instrument.
- Please note that changes in the specifications, construction, or component parts of the instrument may not immediately be reflected in this manual at the time of change, provided that postponement of revisions will not cause difficulty to the user from a functional or performance standpoint.

■ Safety Precautions

- For the protection and safety of the operator and the instrument or the system including the instrument, please be sure to follow the instructions on safety described in this manual when handling this instrument. In case the instrument is handled in contradiction to these instructions, Yokogawa does not guarantee safety.
- Yokogawa assumes no responsibilities for this product except as stated in the warranty.
- If the customer or any third party is harmed by the use of this product, Yokogawa assumes no responsibility for any such harm owing to any defects in the product which were not predictable, or for any indirect damages.
- The following safety symbols are used in this manual:

WARNING

Indicates a potentially hazardous situation which, if not avoided, could result in death or serious injury.

CAUTION

Indicates a potentially hazardous situation which, if not avoided, may result in minor or moderate injury. It may also be used to alert against unsafe practices.

IMPORTANT

Indicates that operating the hardware or software in this manner may damage it or lead to system failure.

NOTE

Draws attention to information essential for understanding the operation and features.

1.1 Safety Precautions

WARNING

- Instrument installed in the process is under pressure. Never loosen or tighten the process connector bolts as it may cause dangerous spouting of process fluid.
- During draining condensate or venting gas in transmitter pressure-detector section, take appropriate care to avoid contact with the skin, eyes or body, or inhalation of vapors, if the accumulated process fluid may be toxic or otherwise harmful.
  Since draining condensate or bleeding off gas gives the pressure measurement disturbance, this should not be done when the loop is in operation.
- If the accumulated process fluid may be toxic or otherwise harmful, take appropriate care to avoid contact with the body, or inhalation of vapors even after dismounting the instrument from process line for maintenance.

IMPORTANT

- Supply air must be clean and dry.
  - Supply air (pressurized) must not be dewed event at -40°C.
  - Air filter with 5μm (0.0002 inch) of filter element maximum opening shall be recommended.
  - Oil filter should be provided to remove oil in the supply air.
- Maximum supply air pressure of transmitter without fixed pressure regulator (GAS or NAS type) is 215 kPa. Should the pressure exceed 215 kPa, it is possible to break the pneumatic amplifier, bellows etc.
- When weling piping during construction, take care not to allow welding currents to flow through the transmitter.
- Do not step on this instrument after installation.
- Applying a leakag-detecting fluid to the instrument may damage the plastic parts resulting from corrosion or cracking.

1.2 Warranty

■ The warranty shall cover the period noted on the quotation presented to the purchaser at the time of purchase. Problems occurred during the warranty period shall basically be repaired free of charge.
- In case of problems, the customer should contact the Yokogawa representative from which the instrument was purchased, or the nearest Yokogawa office.
- If a problem arises with this instrument, please inform us of the nature of the problem and the circumstances under which it developed, including the model specification and serial number. Any diagrams, data and other information you can include in your communication will also be helpful.
- Responsible party for repair cost for the problems shall be determined by Yokogawa based on our investigation.

■ The Purchaser shall bear the responsibility for repair costs, even during the warranty period, if the malfunction is due to:
- Improper and/or inadequate maintenance by the Purchaser.
- Failure or damage due to improper handling, use or storage which is out of design conditions.
- Use of the product in question in a location not conforming to the standards specified by the Yokogawa, or due to improper maintenance of the installation location.
- Failure or damage due to modification or repair by the party except Yokogawa or who is requested by Yokogawa.
- Malfunction or damage from improper relocation of the product in question after delivery.
- Reason of force majeure such as fires, earthquakes, storms/floods, thunder/ lightening, or other natural disasters, or disturbances, riots, warfare, or radioactive contamination.

2. General

2.1 Outline

Model Y/11DM Differential Pressure Transmitter is a force-balance instrument that measures differential pressure and transmits it as a proportional 0.2 to 1.0 kgf/cm^2 or bar, 20 to 100kPa, or 3 to 15 psi air signal.

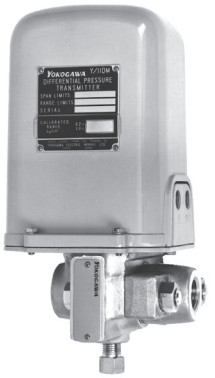

F0201.ai

Figure 2.1 Outline

2.2 Principle of Operation

The high and low pressures are connected to opposite sides of a bellows capsule. The resulting differential pressure exerts a force on the capsule which is applied to the lower end of the force bar. The metal diaphragm serves as both a fulcrum for the force bar and as a closure-seal for the low pressure chamber. The force is transmitted through the flexure connector to the range bar, which pivots on the range adjustment wheel.

Any movement of the range bar causes a minute change in the clearance between the flapper and nozzle. This produces a change in the output pressure from the amplifier to the feedback bellows until the force in the bellows balances the force on the capsule.

The output pressure, which is established by the force-balance, is the transmitted pneumatic signal which is proportional to the differential pressure. This signal is transmitted to a pneumatic receiver to record, indicate, and/or control.

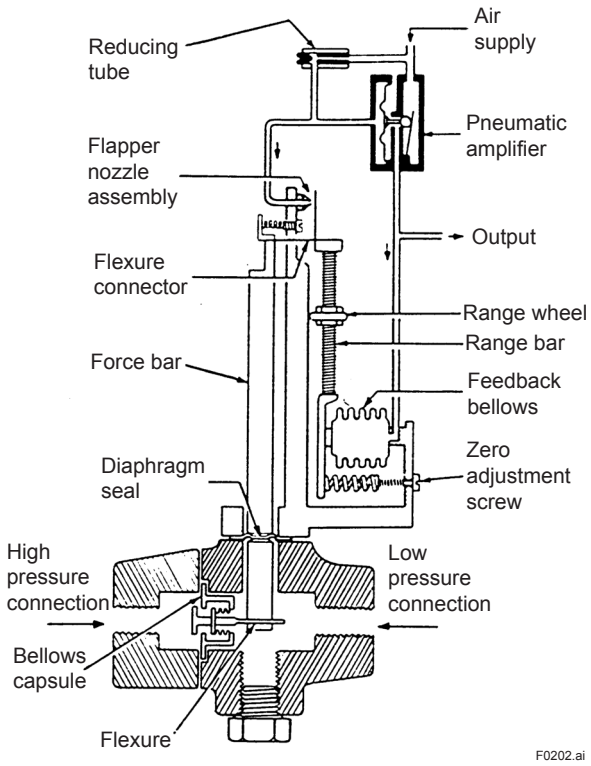

F0202.ai

Figure 2.2 Principle of Operation

2.3 Standard Specifications

Span Limits:
Refer to Table 2.1.
Span is continuously adjustable within range limits.

Range Limits *:
Refer to Table 2.1.
*: When lower range-value is other than zero, optional kit for elevated-zero or suppressed-zero ranges is installed.

Static Pressure Limits:
Refer to Table 2.1.

Output Signal:
20 to 100 kPa.

Accuracy (includes linearity, hysteresis and repeatability):
±0.5 % of span.

Repeatability:
0.1% of span.

Dead Band:
0.05% of span.

Air Supply Pressure:
140 kPa, 1.4 kgf/cm^2 or bar, or 20 psi.

Air Consumption:
0.5 m^3/h at 0 °C, 101.3 kPa {1.033 kgf/cm^2} absolute (0.3 scfm).

Ambient Operating Temperature Range:
-40 to 120 °C (-40 to 250 °F).

Process Temperature Limits:
-40 and 120 °C (-40 and 250 °F) at capsule.

Mounting:
Bracket for nominal 50 mm (2 inches) horizontal or vertical pipe.

Air Connection:
Tapped for JIS R1/4 or 1/4NPT, whichever specified.

Process Connection:
JIS Rc1/2, Rc1/4, 1/2NPT, or 1/4NPT female, whichever specified.

Wetted Parts Material:
Body: Forged JIS SUS 316 stainless steel.
Bellows Capsule: SUS 316L stainless steel.
Force Bar: SUS 316 stainless steel.
Force Bar Seal: Cobalt-nickel alloy.
Capsule Gasket: Silicone elastomer.
Force Bar Seal Gasket: Silicone elastomer.

Connection Hardware:
JIS SCM435 chrome-molybdenum steel cap screws and nuts through body and process connection block.

Cover:
Cast aluminum, finished with gray polyurethane paint. Gasketed for National Electrical Manufacturers Association (NEMA) (USA) Type 3 weatherproof service.

Approximate Weight:
5.4 kg (12 lb).

Table 2.1. Span, Range and Static Pressure Limits.

Capsule		–	M-calibration	P-calibration	bar-calibration
B	Span Limits	0.14 to 1.4 MPa	1.4 to 14 kgf/cm^2	20 to 200 psi	1.4 to 14 bar
	Range Limits	-1.7 to 2.4 MPa	-17 to 24 kgf/cm^2	-250 to 350 psi	-17 to 24 bar
	S. P. Limits	2.4 MPa	24 kgf/cm^2	350 psi	24 bar
C	Span Limits	0.28 to 2.7 MPa	2.8 to 28 kgf/cm^2	40 to 400 psi	2.8 to 27 bar
	Range Limits	-3.5 to 5.1 MPa	-35 to 52 kgf/cm^2	-500 to 750 psi	-35 to 51 bar
	S. P. Limits	5.1 MPa	52 kgf/cm^2	750 psi	51 bar
D	Span Limits	0.7 to 6.8 MPa	7 to 70 kgf/cm^2	100 to 1000 psi	7 to 68 bar
	Range Limits	-10 to 10 MPa	-105 to 105 kgf/cm^2	-1500 to 1500 psi	-100 to 100 bar
	S. P. Limits	10 MPa	105 kgf/cm^2	1500 psi	100 bar
E	Span Limits	1.4 to 13.7 MPa	14 to 140 kgf/cm^2	200 to 2000 psi	14 to 137 bar
	Range Limits	-14 to 14 MPa	-140 to 140 kgf/cm^2	-2000 to 2000 psi	-140 to 140 bar
	S. P. Limits	14 MPa	140 kgf/cm^2	2000 psi	140 bar
Output Signal		20 to 100 kPa	0.2 to 1.0 kgf/cm^2	3 to 15 psi	0.2 to 1.0 bar
Option Code		Standard Specifications	CAL-M	CAL-E	CAL-B

2.4 Model and Suffix Codes

Model	Suffix Codes	Description
Y/11DM	. . . . .	Pneumatic differential pressure transmitter.
Bellows Capsule	**-B**	B capsule. Span:0.14 to 1.4 MPa
	-C	C capsule. Span:0.28 to 2.7 MPa
	-D	D capsule. Span:0.7 to 6.8 MPa
	-E	E capsule. Span:1.4 to 13.7 MPa
Body Material *1	**S**	Forged JIS SUS 316 stainless steel.
Process Connection	**1**	JIS Rc 1/4 female.
	2	JIS Rc 1/2 female.
	3 *2	ANSI 1/4 NPT female.
	4 *2	ANSI 1/2 NPT female.
Options	/ ▭ / ▭	

*1: ⚠ Users must consider the characteristics of selected wetted parts material and the influence of process fluids. The use of inappropriate materials can result in the leakage of corrosive process fluids and cause injury to personnel and/or damage to plant facilities. It is also possible that the diaphragm itself can be damaged and that material from the broken diaphragm and the fill fluid can contaminate the user's process fluids. Be very careful with highly corrosive process fluids such as hydrochloric acid, sulfuric acid, hydrogen sulfide, sodium hypochlorite, and high-temperature steam (150 ºC [302 ºF] or above). Contact Yokogawa for detailed information of the wetted parts material.

*2: Air connections, drain plug connection are also tapped for ANSI NPT threads in addition to the process connection.

2.5 Options

Air Set:

Fixed combination pressure regulator and filter with 35 mm diameter pressure gauge mounted and piped to transmitter. Also available without gauge.

Supply pressure: 0.2 to 1 MPa, 2 to 10 kgf/cm^2 or bar, or 30 to 150 psi.

Output pressure: 140 kPa, 1.4 kgf/cm^2 or bar, or 20 psi.

Maximum operating temperature : 80 °C (180 °F).

Air Connection	Gauge Scale	Option Code
JIS Rc 1/4 female	0 to 200 kPa 0 to 2 kgf/cm^2 0 to 30 psi 0 to 2 bar Without gauge	GAS-FP GAS-FM GAS-FE GAS-FB GAS-F
1/4 NPT female	0 to 200 kPa 0 to 2 kgf/cm^2 0 to 30 psi 0 to 2 bar Without gauge	NAS-FP NAS-FM NAS-FE NAS-FB NAS-F

Kit for Elevated-Zero or Suppressed-Zero Ranges:

Permits adjustments to 1100 % of minimum span and to range limits of capsule. Upper range-value must not exceed upper range-limit of capsule.

Option code: R-kit for suppressed-zero ranges and L-kit for elevated-zero ranges.

Low Spans:

Refer to Table 2.2. Accuracy ±0.5 % of span. (Add 0.5 % with Suffix Code R or L)

Option code: LD.

Cover Color Other Than Standard Finish:

Specify in color block ▭ by color code.

Refer to GS 22D1F1-E.

Option code: SCF-▭.

Stainless Steel Hardware:

JIS SUS 630 cap screws and nuts through body and process connection block.

Option code: SSB.

Oxygen Service Preparation:

Degrease cleansing treatment.

Option code: OSW.

Calibration Units:

M-calibration (Unit: kgf/cm^2) Option code: CAL-M

P-calibration (Unit: psi) Option code: CAL-E

bar-calibration (Unit: bar) Option code: CAL-B

Table 2.2. Low Spans

Capsule	Span		
	kPa	kgf/cm^2	psi
B	70 to 700	0.7 to 7	10 to 100
C	140 to 1350	1.4 to 14	20 to 200
D	350 to 3400	3.5 to 35	50 to 500
E	700 to 6800	7 to 70	100 to 1000

2.6 Dimensions

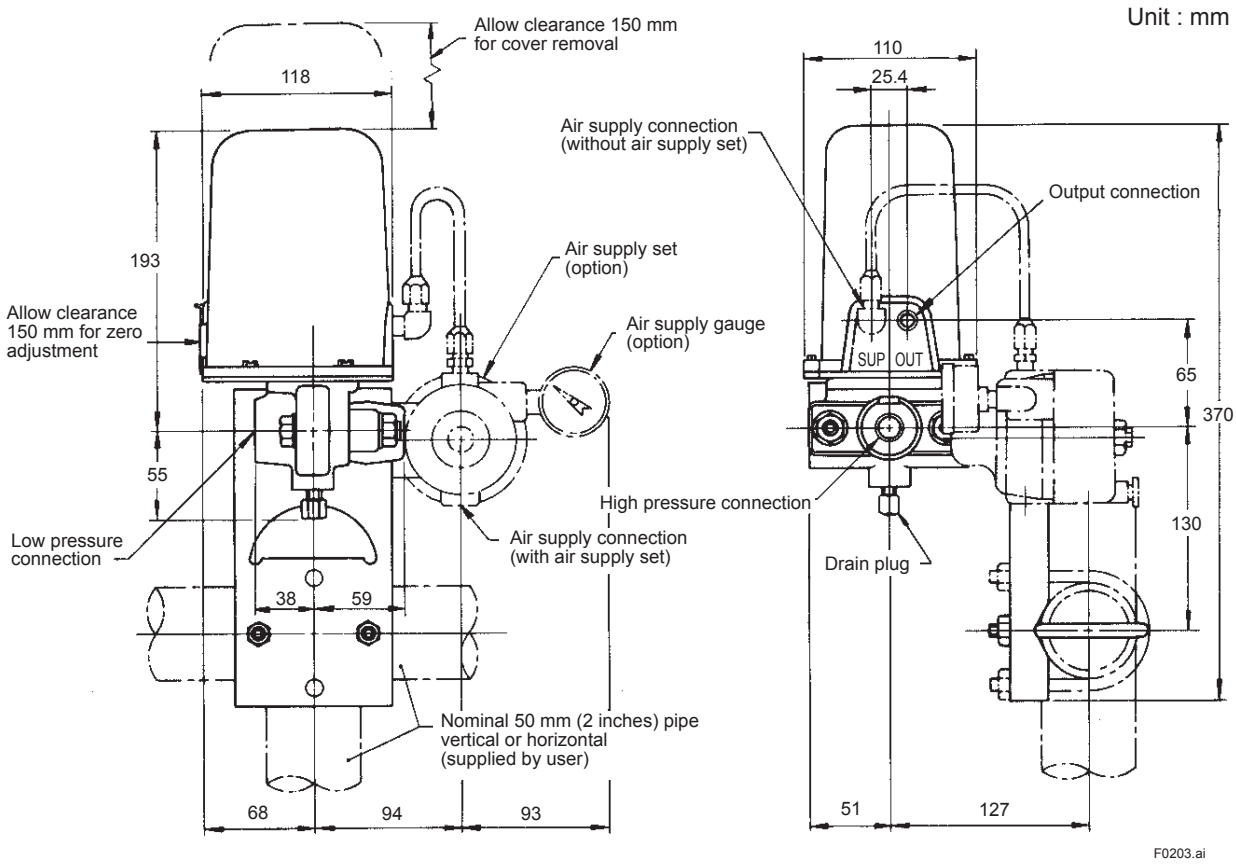

3. Installation

3.1 Transmitter Mounting

Transmitter may be mounted in any position.
After transmitter is mounted, tighten all bolts.
Pipe may be clamped to another pipe, or flanged and bolted to floor or wall.
U-bolt secures assembly to 2" pipe. U-bolt may be revolved 90° for use with horizontal pipe.
For fixed regulator and associated parts, refer to Customer Maintenance Parts List involved.
Optional air-set can be mounted as illustrated below.

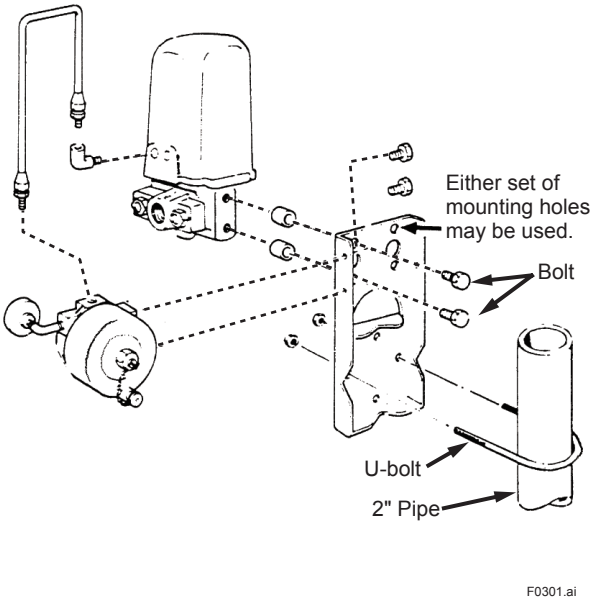

Figure 3.1 Transmitter Mounting

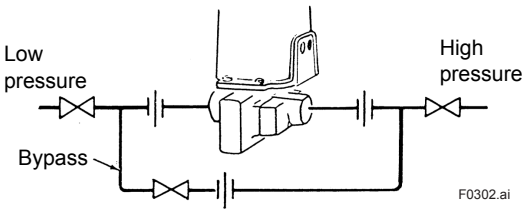

Figure 3.2 Typical Transmitter Piping

3.2 Air Supply and Transmission Piping

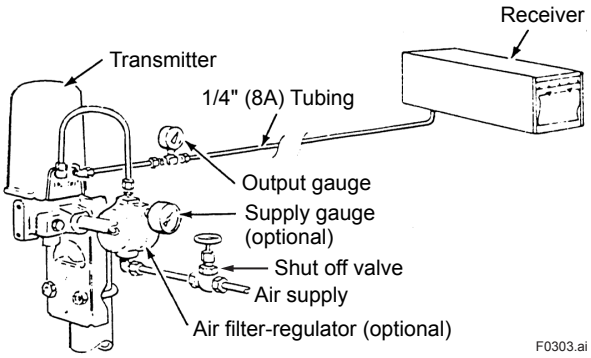

Figure 3.3 Air Supply and Transmission Piping

NOTE

- Air supply must be regulated at 1.4 kgf/cm^2 or bar, 140 kPa, or 20 psi.
- Transmitter uses 0.5 Nm^3/h of air in normal operation.
- Air must be clean and dry. Blow out filter regularly.
- Transmission line must be free of leaks.

4. Operation

4.1 Zero Adjustment

4.1.1 WITHOUT Zero Elevation or Zero Suppression Kit.

Make adjustment with transmitter in operating position.

1. Disconnect line to receiver. Connect 0-1.5kgf/cm^2 or bar, 0-150kPa, or 0-22 psi pressure gauge to OUT connection.

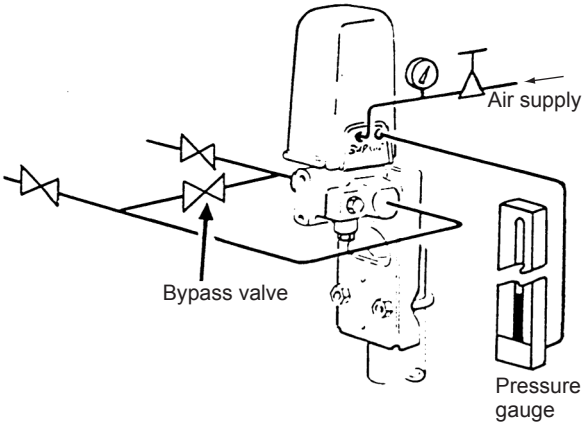

F0401.ai

2. Adjust air supply to pressure at which transmitter will be operated.
3. Close both pressure connection valves, and open bypass valve. Slowly open high pressure connection valve to apply static pressure to both sides of transmitter.
4. Adjust zero screw so that pressure gauge reads 0.2kgf/cm^2 or bar, 20 kPa, or 3 psi.

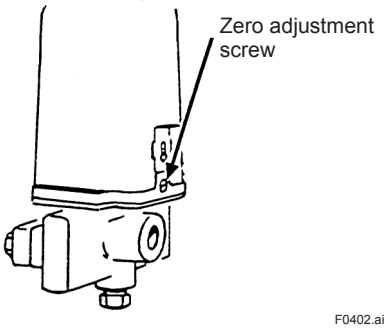

F0402.ai

5. Reconnect OUT piping. If necessary, change zero adjustment on receiver so that reading is zero. Close bypass valve and open low pressure connection valve. Transmitter is now in operation.

4.1.2 WITH Zero Elevation or Zero Suppression Kit.

Make adjustment with transmitter in operating position.

1. Disconnect line to receiver. Connect 0-1.5kgf/cm^2 or bar, 0-150kPa, or 0-22 psi pressure gauge to OUT connection.

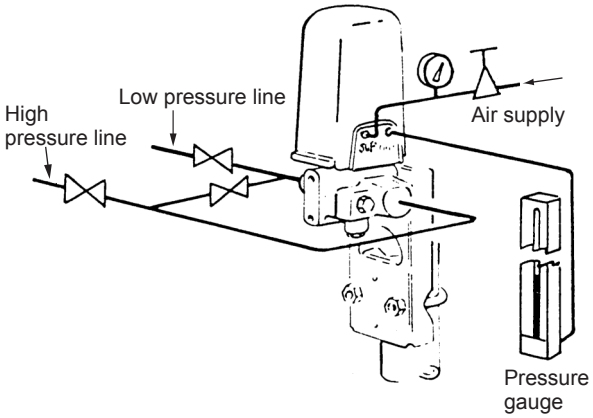

F0403.ai

2. Adjust air supply to pressure at which transmitter will operate.
3. For suppressed-zero ranges: Close bypass valve. Apply pressure equal to amount of zero suppression to high pressure side. Vent other side. For elevated-zero ranges: Close bypass valve. Apply pressure equal to amount of zero elevation to low pressure side. Vent other side.
4. Adjust screw so that pressure gauge reads 0.2 kgf/cm^2 or bar, 20 kPa or 3 psi.

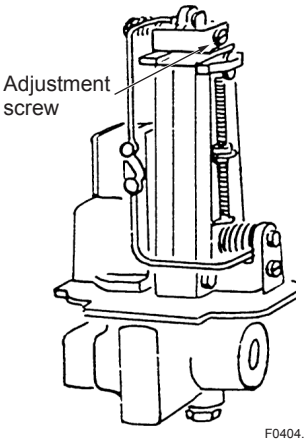

F0404.ai

Illustrated is transmitter with zero suppression kit. If transmitter has zero elevation kit, adjustment screw is on opposite side.

5. Reconnect OUT piping. If necessary, change zero adjustment on receiver so that it reads zero. Open bypass valve, then open pressure connection valves. Close bypass valve. Transmitter is now in operation.

5. Maintenance

5.1 Calibration Notes

Calibration is required if the transmitter has been taken apart for cleaning or for parts replacement, if a change of range is desired, or if amount of zero, elevation or suppression (if transmitter is so equipped) is changed substantially.
The transmitter may be calibrated to 0.2 to 1.0 kgf/cm^2 or bar, 20 to 100 kPa, or 3 to 15 psi signal pressure range. These ranges are not exactly equivalent; therefore the transmitter must be calibrated to the same signal pressure range as the receiver with which it is used.

5.1.1 Calibration Equipment

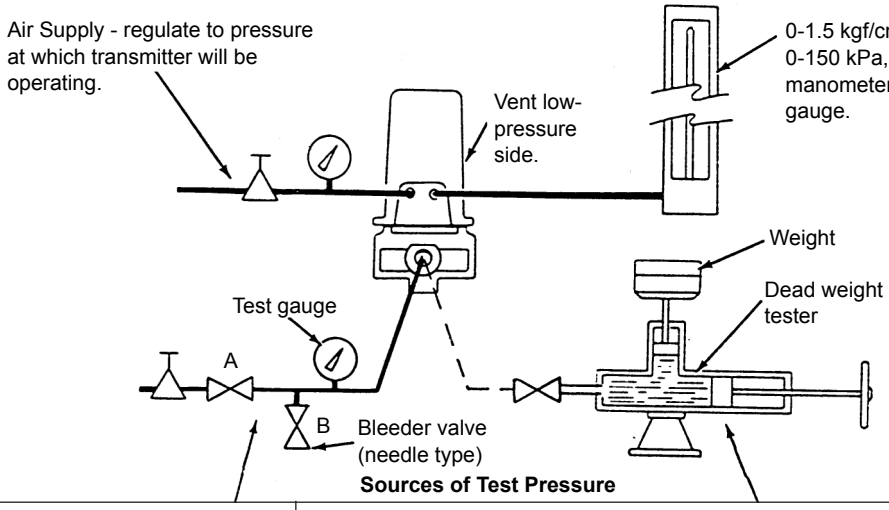

Sources of Test Pressure

Pneumatic Pressure	Hydraulic Pressure (for high pressure)
Lock in desired pressure or vacuum with valve (A). Reduce by bleeding at (B).	Increase pressure with crank until pressure supports an accurately-known weight. Accurate test gauge may be used with a hydraulic pump in a similar set up.

F0501.ai

Figure 5.1 Calibration Equipment

5.1.2 Calibration Procedures

Step 2, 4, and 5 in procedure below pertain only to transmitters with zero suppression or zero elevation kit. Illustrations for these steps show zero suppression kit. If transmitter has zero elevation kit, location of the 2 screws mentioned is reversed. If transmitter has neither zero suppression kit nor zero elevation kit, omit these steps.

1. Set up calibration equipment (Refer to section 5.1.1). Check overrange stop adjustment (Refer to section 5.1.5).
2. If transmitter has elevated or suppressed-zero range, disconnect spring from force bar as follows:

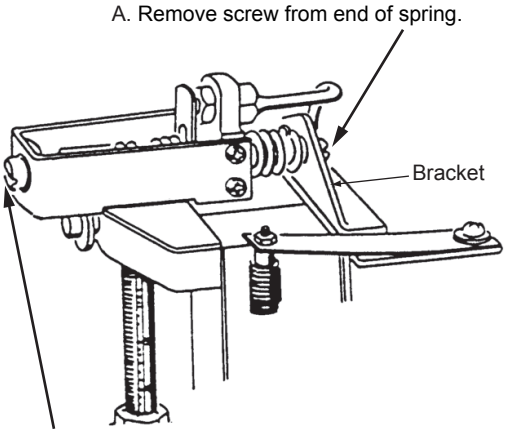

B. Turn adjustment screw clockwise until spring is clear of bracket.
Spring must not bind against flapper or casting.

F0502.ai

3. With no differential pressure on transmitter, adjust zero screw so that output reads 0.2 kgf/cm^2 or bar, 20 kPa, or 3 psi.
   If screw was removed in Step 2-A, replace it.

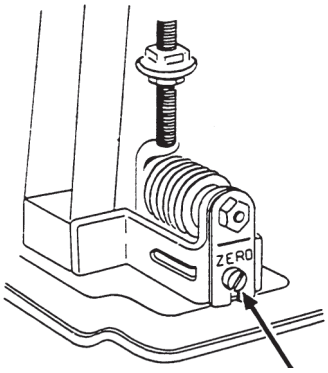

F0503.ai

4. With elevated or suppressed-zero range, set calibrating pressure equal to lower differential limit.

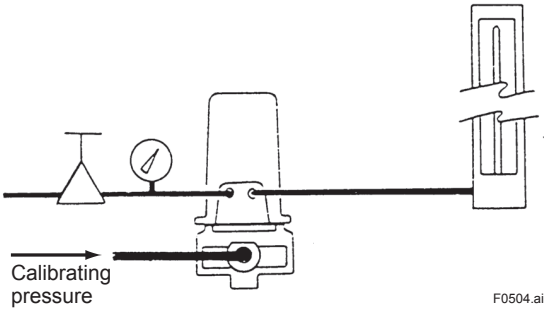

F0504.ai

5. Turn adjustment screw so that output is 0.2 kgf/cm^2 or bar, 20 kPa, or 3 psi.

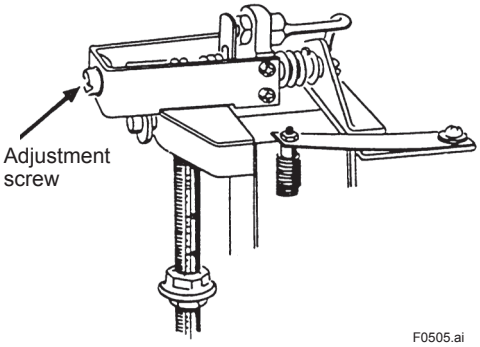

F0505.ai

6. Set calibration pressure equal to upper differential limit. Output should be 1.0 kgf/cm^2 or bar, 100 kPa, or 15 psi.
7. If output is incorrect, loosen locknut and adjust range wheel for correct output. Turning range wheel down increases output. Retighten locknut after each adjustment.

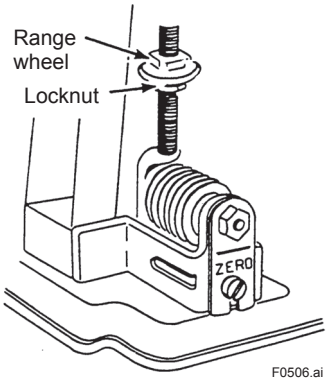

F0506.ai

8. Repeat Steps 3 through 7 until desired accuracy is obtained.
   Tighten range wheel locknut securely.
9. Make zero adjustment (Refer to section 4.1).

5.1.3 To Change Range of Transmitter

The transmitter range may be changed within the limits of the capsule by adjusting the span and zero adjustments. If the desired range is outside the limits of the capsule installed in the transmitter, a different capsule is required. Refer to section 2.3 (Table 2.1) for the span and pressure limits for the various capsules.

■ Capsule Identification

Capsules can be identified by the designation (B, C, D, or E) stamped on their faces, or by the dimensions indicated below.

Note: Styles A and B transmitters cannot use Style C transmitter capsules.

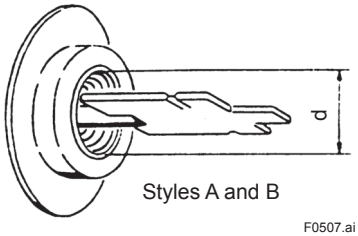

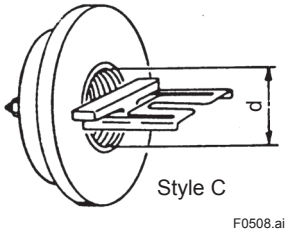

Dimension	Capsule Designation	
d (mm)	Style C	Styles A & B
13	B	A
10	C	B
6	D	C
4	E	D

Figure 5.2 Capsule Identification

5.1.4 Flexure Cap Screw Adjustment

If bellows capsule was removed or flexure cap screw loosened, before calibrating, adjust cap screw as follows:

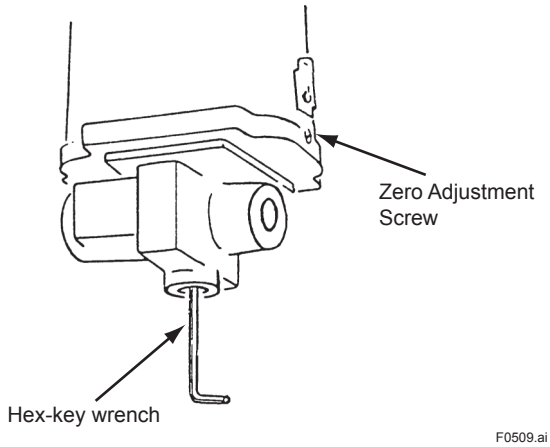

Figure 5.3 Flexure Cap Screw Adjustment

1. Set up the calibration equipment (Refer to section 5.1.1).
2. If transmitter has zero elevation or zero suppression kit, disconnect spring from force bar (Refer to Step 2 of section 5.1.2).
3. Vent pressure signals to transmitter.
4. Remove bottom plug.
5. Insert a 9/64" hex-key wrench and loosen flexure cap screw.
6. Adjust zero screw so that output is 0.2 kgf/cm^2 or bar, 20 kPa, or 3 psi.
7. Carefully tighten flexure cap screw and observe output.
   If output changes less than 0.014 kgf/cm^2 or bar, 1.4 kPa, or 0.2 psi, adjust zero screw so that output is 0.2kgf/cm^2 or bar, 20kPa, or 3psi. Replace bottom plug, and proceed with calibration.
   If output change exceeds 0.014 kgf/cm^2 or bar, 1.4 kPa, or 0.2 psi, repeat Steps 5, 6, and 7.
   If change persists, check capsule installation (Refer to section 5.6), then repeat Flexure Cap Screw Adjustment.

5.1.5 Overrange Stop Adjustment

The overrange stop prevents damage to both the flapper-nozzle and the dashpot. Before calibrating, check that the stop is correctly adjusted.

IMPORTANT

Never move the force bar if the overrange stop is loose or disconnected.

1. Turn on air supply. Apply pressure to high-pressure side so that output is stabilized at a value between 0.2 and 1.0 kgf/cm^2 or bar, 20 and 100 kPa, or 3 and 15 psi.
2. Clearance between both sides of overrange stop (U-shaped bracket) and plate to be sufficient to permit sliding piece of paper between them.
3. If not, loosen screws with 3/32" hex-key wrench and reposition stop to get correct clearance. Retighten screws.

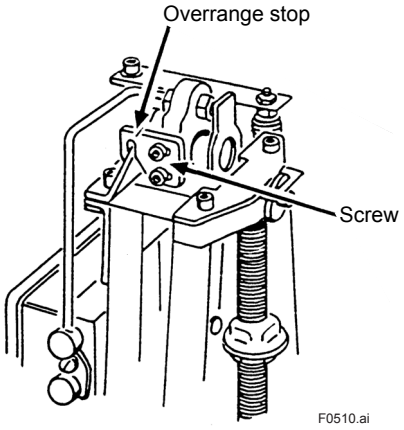

4. With zero elevation kit, loosen lockscrew with 3/32" hex-key wrench. Hold eccentric pin in correct position with opened wrench and tighten lockscrew.

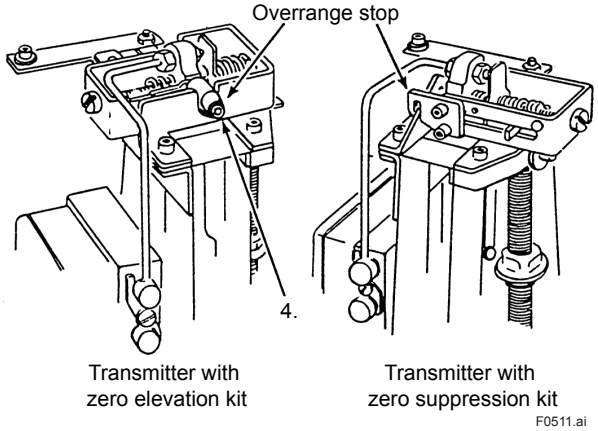

5.2 Supply Air Filter

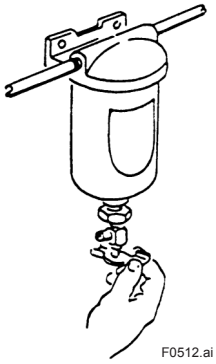

Blow filter out at least once a day.

Figure 5.4 Air Filter

5.3 To Clean Restrictor

A plugged restrictor will cause low output pressure.

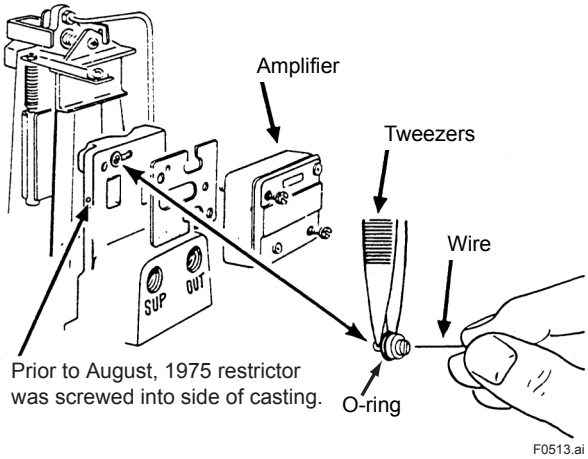

Figure 5.5 Cleaning of Restrictor

1. Remove amplifier (Refer to section 5.8).
2. Lift out restrictor with tweezers.
3. Clean with a 0.18 mm dia. wire.
4. Apply thin film of Vaseline, or similar lubricant to O-ring.

5.4 To Clean Nozzle Assembly

An accumulation of dirt at the flapper nozzle may cause a zero shift.

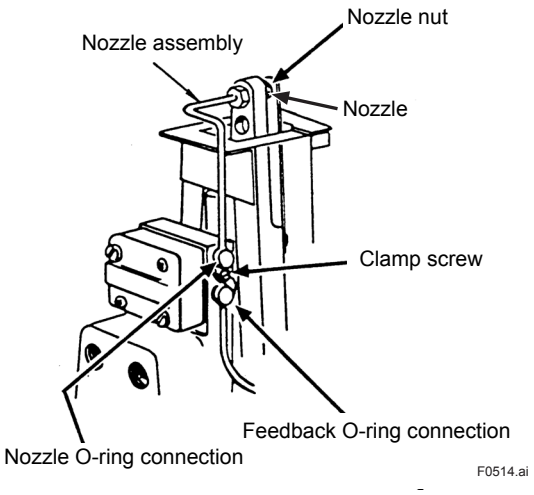

Figure 5.6 Cleaning of Nozzle Assembly

1. Unscrew nozzle nut. Do not let soldered nut on opposite side of casting turn.
2. Ease nozzle out of casting.
3. Loosen clamp screw and rotate S-clamp. Withdraw nozzle O-ring connection with twisting motion. Do not bend tubing.
4. Clean nozzle with 0.73 mm dia. wire, compressed air, or suitable solvent. Wipe top of flapper clean.

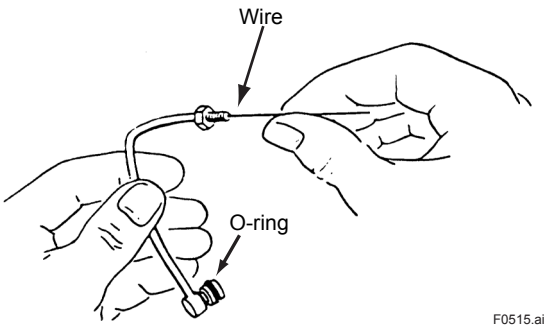

5. Before replacing, apply a thin film of Vaseline or similar lubricant to O-ring. Replace nozzle assembly in reverse order. Check reference adjustment (Refer to section 4.1).

5.5 To Remove Bellows Capsule

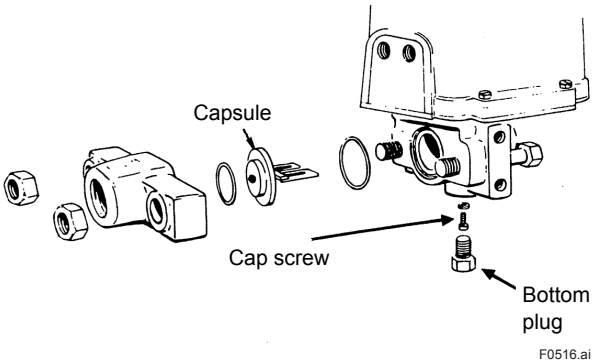

Figure 5.7 Remove Bellows Capsule

1. Remove bottom plug.
2. Remove cap screw using 9/64" hex-key wrench. This will free capsule from bottom of force bar.
3. Disassemble remaining parts as shown.

5.6 To Replace Bellows Capsule

When capsule is replaced, use new O-rings.

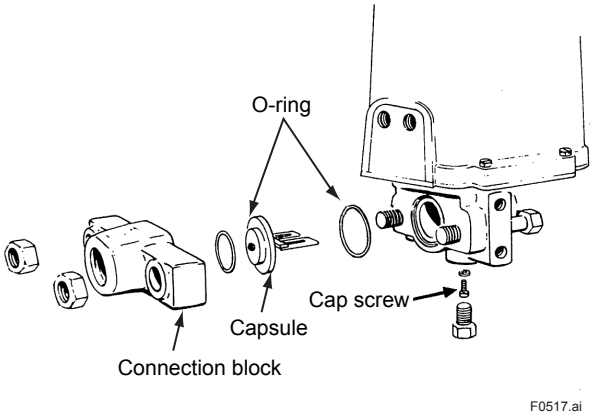

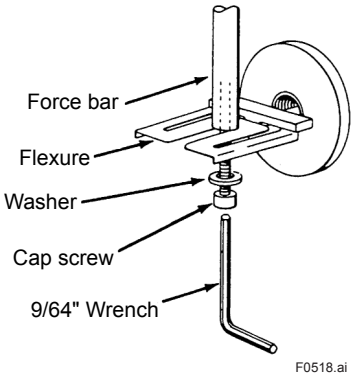

Figure 5.8 Replace the Bellows Capsule

1. Lubricate O-rings with a thin film of Vaseline or similar lubrication, and position in grooves in connection block and body.
2. Insert capsule with flexure horizontal against bottom of force bar.
3. Loosely screw cap screw into force bar to clamp flexure lightly.
4. Position connection block over bolts and tighten nuts gradually to 55 N·m torque.
5. Tighten flexure against bottom of force bar as described in Flexure Cap Screw Adjustment (Refer to section 5.1.4), then calibrate transmitter (Refer to section 5.1.2).

5.7 To Clean or Replace Screens

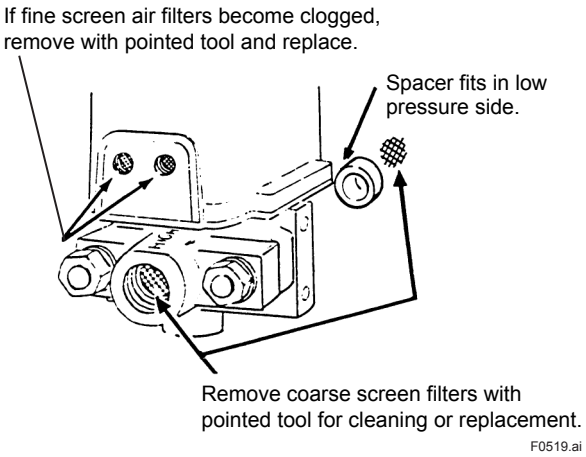

Figure 5.9 Clean or Replace Screens

5.8 To Remove Pneumatic Amplifier

To remove pneumatic amplifier, remove 2 large screws and pry off. A gasket is furnished with each replacement amplifier.
When replace the pneumatic amplifier, tighten the screws by the torque of 1.6 to 1.8 N·m (16 to 18 kgf·m).
For servicing details, refer to Appendix 1.

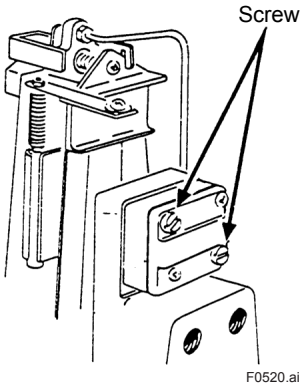

Figure 5.10 Remove Pneumatic Amplifier

5.9 Further Disassembly

IMPORTANT

Normal servicing of the transmitter does not require the removal of any parts other than those already mentioned. Further disassembly is not recommended by YOKOGAWA. The following procedures are described for emergency use only and the user must assume responsibility for loss of accuracy or damage to the transmitter.

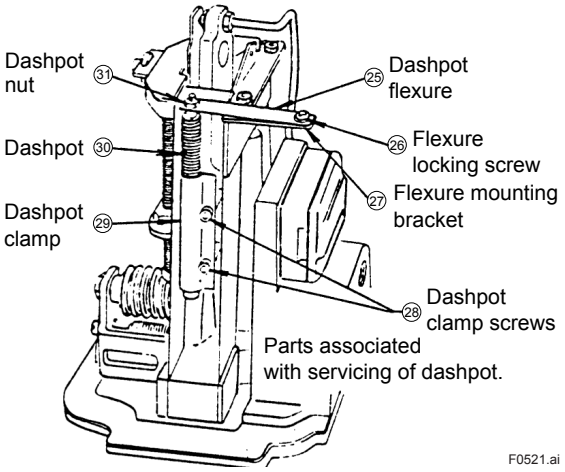

5.9.1 Dashpot Removal

1. Remove flexure locking screw ㉖, and loosen the two dashpot clamp screws ㉘. Lift out dashpot assembly. Disconnect flexure ㉕ by unscrewing dashpot nut ㉛.

Caution: In removing and replacing dashpot nut, keep dashpot ㉚ from turning by putting a thin, open-end wrench across flat sections of dashpot just under flexure.

2. To replace assembly, position narrow slotted hole of flexure on dashpot stud. Put washer on stud and loosely screw on nut ㉛. Slide dashpot into clamp.
   Position flexure laterally so that slotted hole in free end is approximately centered on tapped hole under it. Tighten nut ㉛.
3. Adjust height of dashpot until free end of flexure just touches flexure mounting bracket ㉗. Tighten the two clamp screws ㉘. Loosely insert flexure locking screw ㉖ and its washer in place.

5.9.2 Dashpot Alignment

1. With air supply on, there must be some output from transmitter.
2. Loosen flexure locking screw ㉖ just enough to allow free vibration of adjacent parts. Put a finger on dashpot nut ㉛ and gently move dashpot assembly back and forth (total travel is about 1 mm) in line of flexure. When assembly is in middle of its travel, tighten flexure locking screw ㉖. Flexure ㉕ must be flat and horizontal.

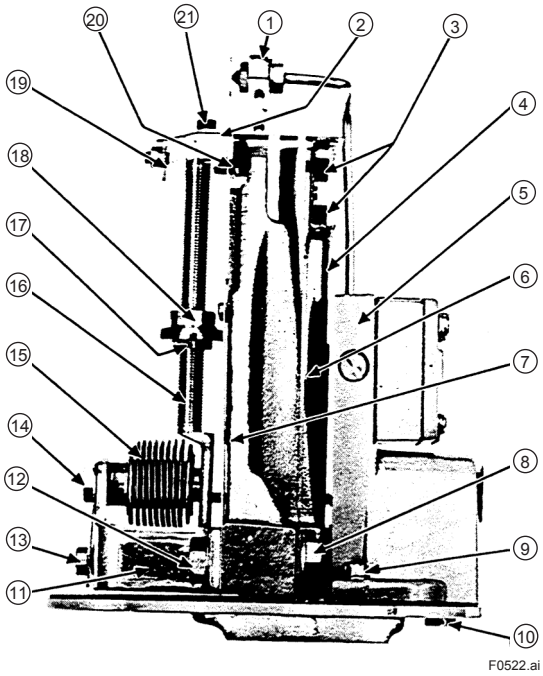

5.9.3 To Remove Feedback Bellows and Zero Spring (behind Zero Screw)

1. Carefully pry out feedback O-ring connection at amplifier (Refer to section 5.4).
2. Using 7/16" open-end wrench, remove the two 1/4" cap screws ⑫ holding bracket ⑪.
3. Unscrew completely zero adjustment screw ⑬ to release zero spring. Bracket ⑪ and feedback bellows ⑮ can now be removed.
4. Remove nut ⑭ to disconnect feedback bellows from bracket.
5. Remove zero spring by unscrewing it from range rod ⑯. Be careful not to change alignment on the spring clamp.
6. Reverse this procedure to reassemble, making sure that post on bracket is within zero spring alignment clamp. Tighten zero adjustment screw until about 6 mm of thread remains exposed. When replacing feedback connection apply a thin film of Vaseline or similar lubricant to O-ring.
7. Check calibration (Refer to section 5.1.2).

5.9.4 To Remove Back Flexures

Unless front flexure ⑥ has already been removed, 7/64" hex-key wrench used in Step 2 must be cut down to fit into screws ⑳.

1. Using 7/16" open-end wrench, remove 1/4" cap screws ⑫ holding bracket ⑪.
2. Using a 7/64" hex-key wrench, remove two screws and plates ⑳ holding back flexures ⑦, and remove back flexures.
3. Reverse this procedure to reassemble. Do not tighten cap screws ⑫.
4. Loosen cap screws ⑧ and force bar screws ③. Apply 10 kgf/cm^2 or bar, 1 MPa, or 150 psi to both sides of transmitter. Tap body lightly and tighten all screw.
5. Calibrate transmitter (Refer to section 5.1.2).

5.9.5 To Remove Force Balance Unit

1. Remove relay mounting assembly ⑤ (Refer to section 5.9.6).
2. Remove bellows capsule (Refer to section 5.5).
3. Using a 3/16" hex-head wrench remove the three socket-head screws holding force balance unit to body. In removing screws, be careful not to damage flexures ⑥ and ⑦. Withdraw force balance unit from body.
4. Reverse this procedure to reassemble.
   When tightening screws removed in Step 3, follow procedure on section 5.9.11 to maintain original static alignment accuracy.
   Replace O-ring that fits around the force bar on top of lower section, and the two gaskets that go on each side of bellows capsule. Apply a thin film of Vaseline or similar lubricant to O-ring.
5. Calibrate transmitter (Refer to section 5.1.2).

5.9.6 To Remove Relay Mounting Assembly

1. Carefully pry out nozzle and feedback O-ring connections at amplifier (Refer to section 5.4).
2. Remove relay mounting assembly ⑤ by unscrewing the two screws ⑨ above mounting plate and small screw ⑩ below mounting plate.
3. Reverse this procedure to reassemble. When replacing O-ring connections, apply a thin film of Vaseline or similar lubricant to O-rings.

5.9.7 To Remove Front Flexure

1. If transmitter has optional zero elevation or suppression kit, remove this assembly.
2. Disconnect dashpot flexure from arm (Refer to section 5.9.1).
3. Carefully pry out both feedback and nozzle O-ring connections at amplifier and remove nozzle tubing from casting ① (Refer to section 5.4).
4. Remove relay mounting assembly ⑤ (Refer to section 5.9.6).
5. Using a 7/64" hex-key wrench, remove top plate ② by removing two plate screws ㉑.
6. Using a 9/64" hex-key wrench, remove force bar screws ③.
7. Remove cap screws ⑧ and plates and lift front flexure ⑥ off of dowel.

8. Reverse this procedure to reassemble. If force bar has been removed or force balance unit loosened from body, top of front flexure should be visually lined up with casting ①, so that there is no twist evident in flexures. Then tighten plate screws ㉑. Do not tighten cap screws ⑧.
9. Loosen cap screws ⑫ and force bar screws ③. Apply 10 kgf/cm^2 or bar, 1 MPa, or 150 psi to both sides of transmitter. Tap body lightly and tighten all screws.
10. Check overrange stop adjustment (Refer to section 5.1.5), and static alignment (Refer to section 5.9.9) before calibrating.

5.9.8 To Remove Force Bar

1. Remove force balance unit (Refer to section 5.9.5).
2. Using a 9/64" hex-key wrench, remove the two force bar screws ③. Force bar ④ can now be removed through bottom. This unit should not be further disassembled; if its diaphragm seal is removed from force bar, leaks are likely to occur after reassembly. If either force bar or its seal requires replacing, they both should be replaced as a unit.
3. Reverse this procedure to reassemble. Replace O-ring at force bar seal. Before inserting force bar into top-works, lubricate O-ring and top of force bar with Vaseline or similar lubricant. Carefully ease force bar into O-ring recess to avoid damaging O-ring.
4. When reassembled, loosen the four cap screws ⑧ and ⑫ and two force bar screws ③. Apply 10 kgf/cm^2 or bar, 1 MPa, or 150 psi to both sides of transmitter. Tap body lightly and tighten all screws.
5. Check overrange stop adjustment (Refer to section 5.1.5), dashpot alignment (Refer to section 5.9.2), and static alignment (Refer to section 5.9.9). Calibrate transmitter. (Refer to section 5.1.2).

5.9.9 Static Alignment

This adjustment is required if front flexure or force bar is replaced.

1. Connect transmitter to input air supply regulated at 1.4 kgf/cm^2 or bar, 140 kPa, or 20 psi.
2. Remove bottom plug. Check that capsule flexure cap screw is tightly fastened to force bar, using a 9/64" hex-head wrench in bottom plug hole. Replace bottom plug.
3. Rotate range wheel ⑱ to lowest position on range rod. Tighten locknut ⑰.
4. Vent pressure connections and adjust zero screw ⑬ so that output pressure is 0.4 kgf/cm^2 or bar, 40 kPa, or 6 psi.
5. Gradually and simultaneously apply maximum static pressure expected to both sides of transmitter. Output pressure should remain at 0.4 kgf/cm^2 or bar, 40 kPa, or 6 psi. If output has changed by more than ±0.004 kgf/cm^2 or bar, ±0.4 kPa, or ±0.06 psi, follow procedure below: Loosen the two plate screws ㉑ and adjust static alignment wheel ⑲ to bring output back to 0.4 kgf/cm^2 or bar, 40 kPa, or 6 psi. Turn wheel clockwise to lower output, and counterclockwise to raise output. Tighten plate screws ㉑ and repeat Steps 4 and 5.
6. Slowly release pressure from capsule. Remove bottom plug and loosen, then carefully retighten capsule flexure cap screw.
7. Calibrate transmitter (Refer to section 5.1.2).

5.9.10 Flapper Alignment

The flapper is aligned at the factory; a realignment is required only if the force balance unit has been disassembled. This alignment procedure requires a spacing tool (see illustration), a 1/8" open-end wrench, and a small screwdriver. (The wrench and screwdriver are included in tool kit Model 6925-6000, obtainable from YOKOGAWA.)

Caution: Use care in turning thin flexure alignment screw to prevent shearing.

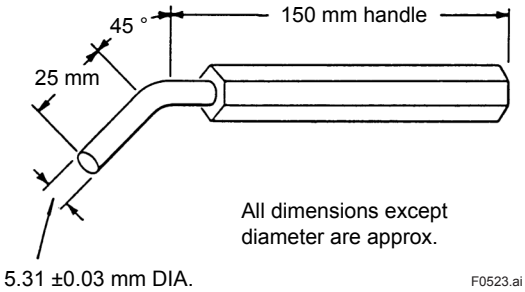

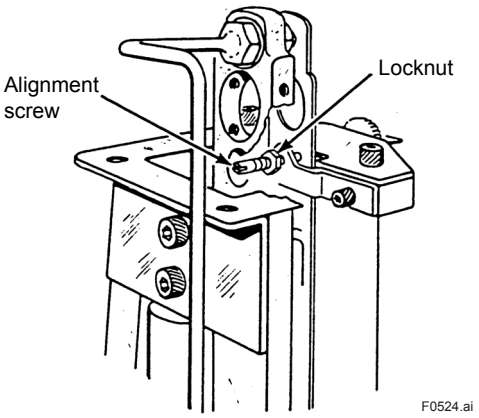

1. Remove zero elevation or suppression spring attachment, if present.
2. Connect an air supply regulated at a fixed pressure 1.4 kgf/cm^2 or bar, 140 kPa, or 20 psi to input, and a 0-1.5 kgf/cm^2 or bar, 0-150 kPa, or 0-22 psi test gauge or manometer to output.
3. Loosen flexure cap screw at bottom of force bar (Refer to section 5.1.4).
4. Turn range wheel to top of range bar.
5. Using spacing tool as feeler gauge, insert tool at lower end of range bar between threaded surface and machined casting surface. Adjust zero screw to get correct spacing for tool.
6. Loosen flapper alignment screw locknut and adjust screw so that output is 0.2 kgf/cm^2 or bar, 20 kPa, or 3 psi.
7. Repeat Step 5. If output is not between 0.23 and 0.33 kgf/cm^2 or bar, 23 and 33 kPa, or 3.4 and 4.8 psi, repeat Steps 5 and 6 until output is within these limits.
8. Retighten flapper alignment screw locknut. Reinstall zero elevation or zero suppression attachment.
   Perform flexure cap screw adjustment, (Refer to section 5.1.4).
   Check calibration, (Refer to section 5.1.2).

5.9.11 Bolt Tightening Procedure - Force Balance Unit

When reinstalling the 3 socket-head bolts that hold the force balance unit to the transmitter body, follow the bolt tightening procedure shown below.

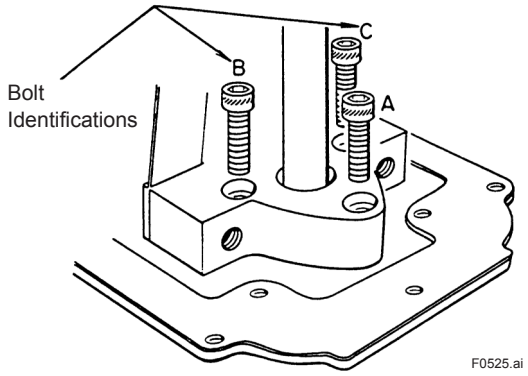

Step No.	Bolt	Torque (N·m)
1	A	0.6
2	B	0.6
3	C	0.6
4	B	3.5
5	C	3.5
6	A	2.3
7	B	5.2
8	C	5.2
9	A	3.5
10	B	7.5
11	C	7.5
12	A	5.8

Appendix 1. 80A Pneumatic Amplifier (Part No. F9138YA)

The function of the pneumatic amplifier is to convert a small change in the input signal (an air pressure signal) to a large change in the output signal. Typically a 0.07 kgf/cm^2 (0.07 bar, 7 kPa, or 1 psi) change in the input will produce approximately a 0.8 kgf/cm^2 (0.8 bar, 80 kPa, or 12 psi) change in the output.

A1.1 Principles of Operation

The air supply enters the pneumatic amplifier through a port on the surface of the instrument on which the amplifier is mounted. The input signal (nozzle pressure) enters the amplifier through another port and acts on the diaphragm. Since the stem valve is mounted on the diaphragm, the two move in unison.

As the input signal increases, the stem pushes against a ball valve which in turn moves a flat spring, allowing the supply air to enter the amplifier body. Further motion of the stem valve, causes it to close off the exhaust port. Thus, when the input pressure increases, the stem (exhaust) valve closes and the supply valve opens; when the input decreases, the stem valve opens and the supply valve closes. This varies the pressure to the output.

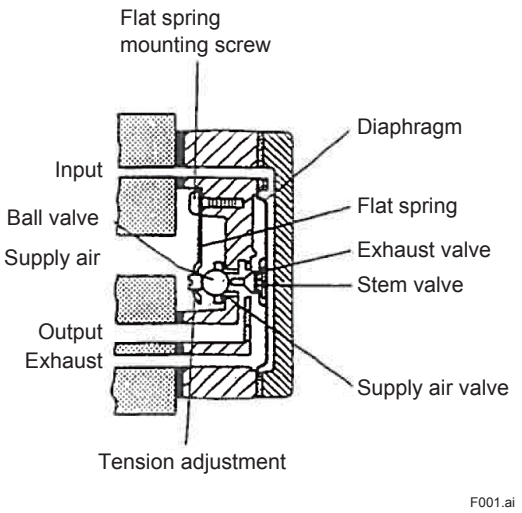

Figure A1. Cross Sectional View

A1.2 Cleaning the Pneumatic Amplifier

Should the pneumatic amplifier require cleaning, remove it from the instrument. Loosen the two cover screws and the spring mounting screw to disassemble the pneumatic amplifier. Clean the disassembled parts with a suitable solvent (do not allow solvent to contact the gasket) and dry them carefully with compressed air. When reassembling the pneumatic amplifier, all corresponding holes must line up and all outside edges must coincide with other edge of the amplifier body casting. Tighten all screws.

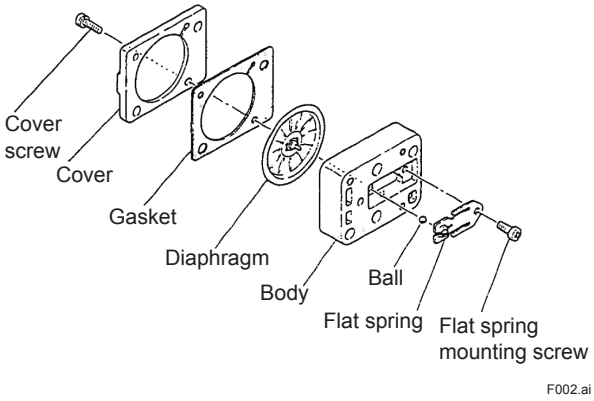

Figure A2. Exploded View

CAUTION

After reassembling the amplifier, perform a calibration with the calibrator. (Refer to section A1.3)

A1.3 Calibration Procedure using Calibrating Fixture

This procedure requires a Model 6971 calibrator, which is available from Yokogawa.

(1) Mount the amplifier on the calibrator with the flat spring mounting screw to the left. (Be sure to mount the amplifier in the correct direction.) Fasten the amplifier with the two wing nuts.

(2) Air supply.
Apply air at 1.4 kgf/cm^2 or bar, 140 kPa, or 20 psi to air supply coupling ②.

(3) Self-centering the stem valve.
   a. Seal nozzle ③ by manual contact for several seconds, until the nozzle pressure (diaphragm back-up pressure) is 1.4 kgf/cm^2 or bar, 140 kPa, or 20 psi and confirm that the nozzle pressure exceeds 1.0 kgf/cm^2 or bar, 100 kPa, or 15 psi.
   b. Open nozzle ③ and manually close the air check valve, until the nozzle input pressure is zero (atmospheric pressure).
   c. Repeat steps a and b above.

(4) Nozzle input pressure adjustment.
Turn nozzle ③ with a wrench while observing nozzle input pressure gauge ⑤, so the nozzle input pressure is 0.25 kgf/cm^2 or bar, 25 kPa, or 3.6 psi.

(5) Output pressure confirmation.
Read the output pressure on output pressure indicator ⑥. When output pressure falls between 0.55 and 0.60 kgf/cm^2 (0.55 and 0.60 bar, 55 and 60 kPa, or 7.8 and 8.5 psi), apply air pressure at 0 and 1.4 kgf/cm^2 (0 and 1.4 bar, 0 and 140 kPa, or 0 and 20 psi) by one cycle the same as step (2). Next, confirm that output pressure falls between 0.55 and 0.60 kgf/cm^2 (0.55 and 0.60 bar, 55 and 60 kPa, or 7.8 and 8.5 psi) under the same condition as step (4). When the output pressure falls within this range, output adjustment is completed, but if it does not, perform output pressure adjustment as per step (6).

(6) Output pressure adjustment.
   a. Close the air supply valve.
   b. Remove plug ⑨ using a 3/16" Allen wrench.
   c. Insert a screwdriver in the plug hole and turn the tension adjustment (turn it clockwise to decrease output, and counterclockwise to increase output).
   d. Install plug ⑨.
   e. Repeat steps (2) through (6).

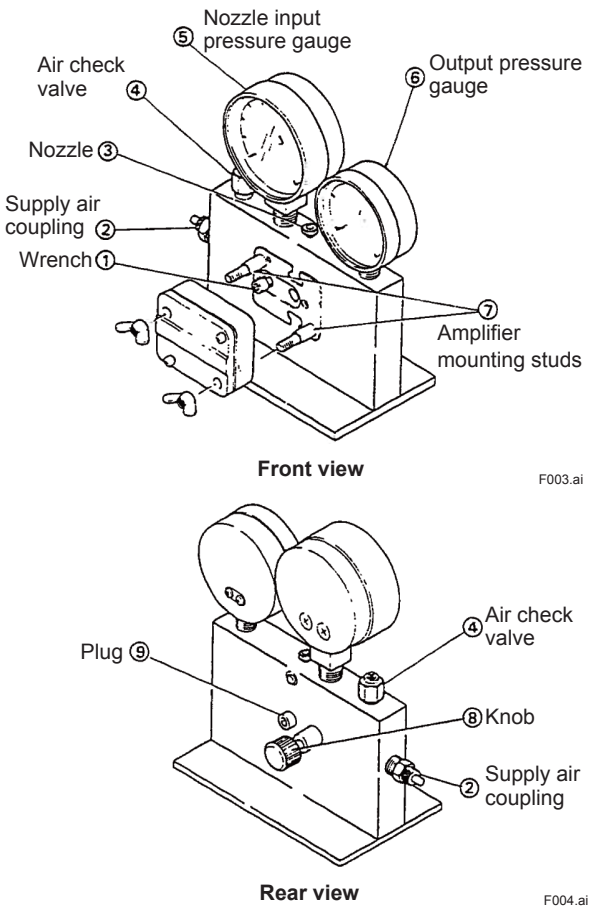

Figure A3. Model 6971 Pneumatic Amplifier Calibrator

NOTE: The above amplifier output pressure adjustment can be performed by removing the amplifier from the calibrator.

Customer Maintenance Parts List

Model Y/11DM
PNEUMATIC DIFFERENTIAL PRESSURE TRANSMITTER (Style C)

[Style: C]

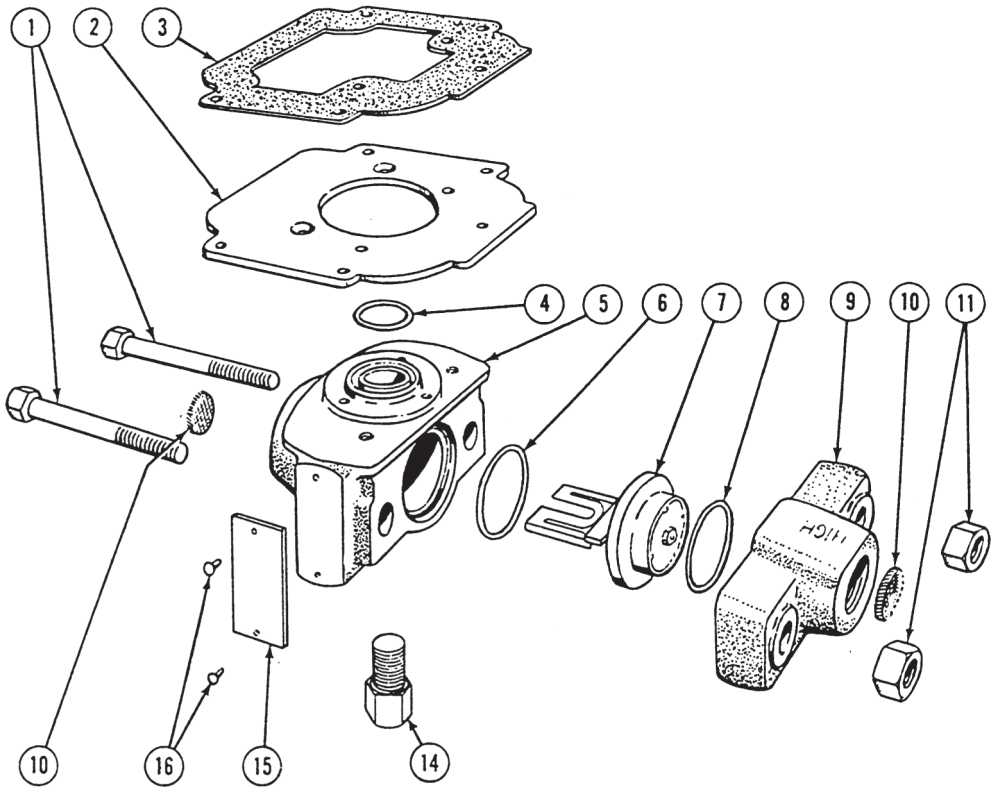

Item	Part No.	Qty	Description
1	Below	2	7/16-20 x 2 3/4 Cap Screw
	X0116LX		SCM435 (standard)
	X0118AR		SUS630 Stainless Steel
2	U0102MK	1	Plate
3	F9100AT	1	Gasket
4	Below	1	*O-Ring
	U0102MY		Silicone Elastomer (standard)
	F9101ZJ		Glass Fiber Filled Teflon (PTFE) (clean for oxygen service)
5	Below	1	Body (SUS 316 stainless steel)
	F9101KT		JIS Rc 1/4
	P0120TZ		1/4 NPT
	F9101KW		JIS Rc 1/2
	P0120YH		1/2 NPT
6	Below	1	*O-Ring
	P0120EW		Silicone Elastomer (standard)
	F9202XS		Teflon (PTFE) (clean for oxygen service)
7	See Table1	1	Capsule Assembly (SUS 316 L s.s.)
8	Below	1	*O-Ring
	P0120FS		Silicone Elastomer (standard)
	F9202XR		Teflon (PTFE) (clean for oxygen service)
9	Below	1	Cover Connection
	F9101KR		JIS Rc 1/4
	P0121AD		1/4 NPT
	F9101KS		JIS Rc 1/2
	P0121AF		1/2 NPT
10	Below	2	*Screen Disc (SUS 316 s.s.)
	D0116KP		For 1/4 Connection
	B0116BP		For 1/2 Connection
11	Below	2	Nut
	X0104FK		SCM435 (standard)
	X0118AS		SUS630 Stainless Steel
14	Below	1	Plug (SUS 316 stainless steel)
	F9200CS		JIS Rc 1/4
	D0114RZ		1/4 NPT
15	0052270	1	Tag Plate (blank)
16	0046879	2	Self-tapping Screw

Note * Denotes parts more frequently replaced.

Table 1. Capsule Assembly Part Number

Capsule	Part No.	Description
B	P0121AM	Standard Service
C	P0121AP	
D	P0121AR	
E	P0121AT	
B	P0121EH	Oxygen Service
C	P0121EJ	
D	P0121EK	
E	P0121EL	

CMPL 02C01B06-01E
8th Edition:Nov. 2012(KP)

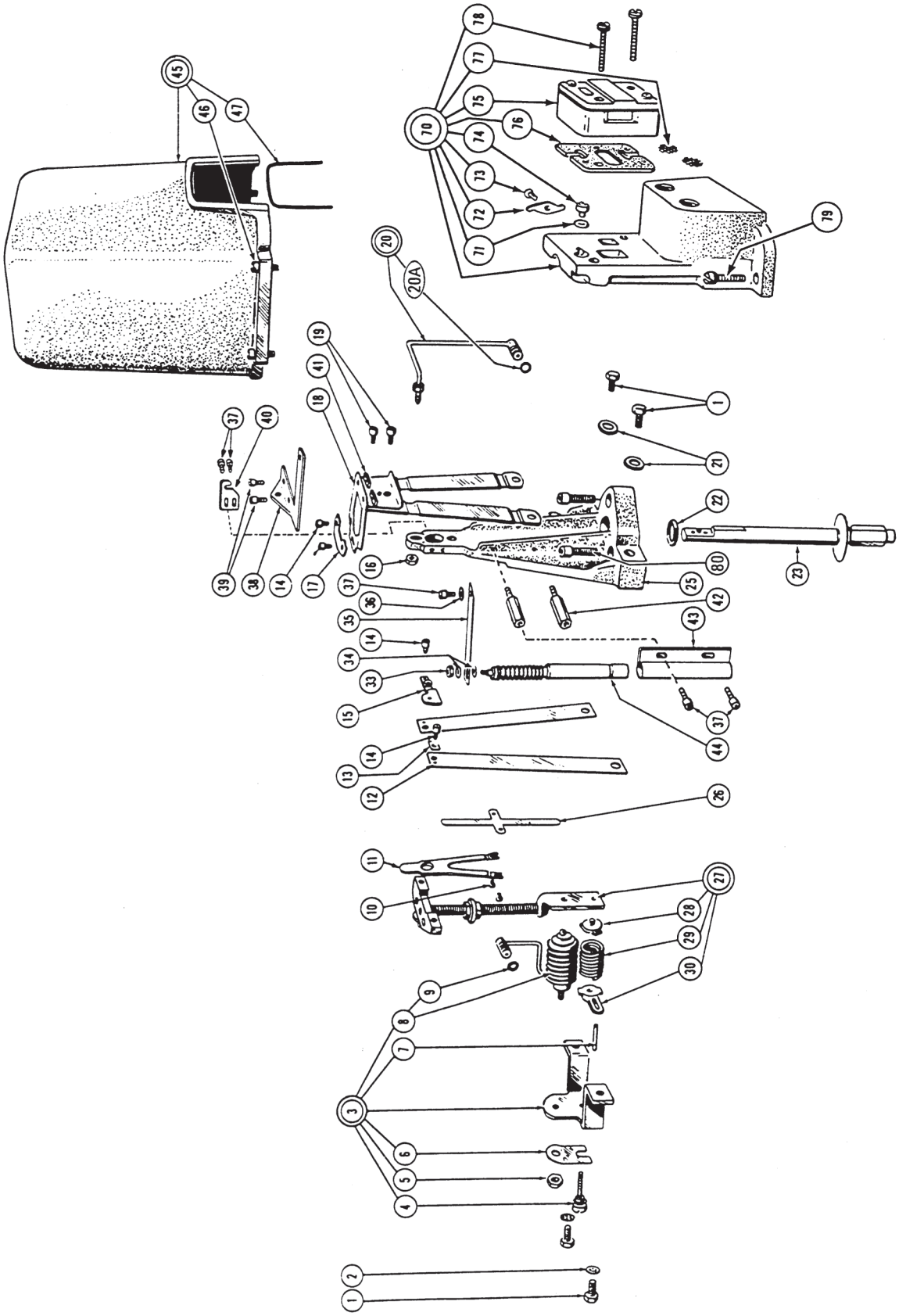
45
46
47
70
78
77
75
76
74
73
72
71
79
20
20A
19
41
18
37
40
39
38
14
17
16
37
36
35
14
34
33
15
14
13
12
11
10
9
8
7
3
6
5
4
2
1
1
21
22
23
80
25
42
43
37
44
26
27
28
29
30

Force Balance Unit (items 1 through 30)

Part No.N0148EG : Standard

Part No.N0148EH : Low Spans

(for Model Y/11DM- ☐ /LD)

Item	Part No.	Qty	Description
1	U0102LN	4	1/4-28 x 1/2 Hex H.Screw
2	0048219	2	Lockwasher
3	U0119TA	1	Bracket Assembly (N0148EG)
	U0119TF	1	Bracket Assembly (N0148EH)
4	U0102FY	1	Screw
5	0017611	1	Nut
6	U0102FZ	1	Spring
7	U0102NA	1	Pin
8	U0119TC	1	Bellows Assembly (N0148EG)
	U0119TG	1	Bellows Assembly (N0148EH)
9	D0123MZ	1	*O-Ring
10	0023442	2	3-48 x 3/16 Fil. H.Screw
11	N0999MH	1	Flapper
12	U0102KL	2	Flexure
13	U0102LP	1	Plate
14	X0100MK	4	6-32 x 3/16 Socket H.Cap Screw
15	U0102TE	1	Bracket Assembly
16	X0104EB	1	Nut
17	U0102KP	1	Plate
18	N0999FM	1	Flexure Assembly
19	X0100ML	2	8-32 x 1/4 Socket H.Cap Screw
20	U0119TD	1	Nozzle Assembly
20A	D0123MZ	1	*O-Ring
21	X0166MX	2	Washer
22	N0143XN	1	*O-Ring
23	N0148EB	1	Force Bar Assembly
25	N0999ML	1	Base
26	N0142NY	1	Spacer
27	N0999QA	1	Range Bar Assembly (N0148EG)
	N0999MP	1	Range Bar Assembly (N0148EH)
28	U0102KR	1	Spring Holder
29	N0999MG	1	Spring (N0999QA)
	N0999MC	1	Spring (N0999MP)
30	U0102KC	1	Spring Holder

Other Parts (items 33 through 80)

Item	Part No.	Qty	Description
33	X0104BR	1	Nut
34	0029423	2	Washer
35	U0114BP	1	Flexure
36	0013335	1	Washer
37	X0116PB	5	5-40 x 3/16 Socket H. Cap Screw
38	U0117BN	1	Bracket
39	A0100YC	4	6-32 x 1/4 Socket H. Cap Screw
40	U0117AR	1	Bracket
41	N0138BS	2	Plate
42	F9100FM	2	Colum
43	N0148CD	1	Clamp
44	N0119EK	1	Dashpot
45	U0102RA	1	Cover Assembly
46	X0100RP	4	Screw
47	U0102MS	1	Gasket
70	F9101DF	1	Relay Mounting Assembly (JIS connection)
	D0124JD	1	Relay Mounting Assembly (ANSI connection)
71	A037744	1	*O-Ring
72	U0102MF	1	Clamp
73	X0100AA	1	6-32 x 7/32 Fil. H. Screw
74	D0124JG	1	*Restrictor
75	F9138YA	1	*Pneumatic Amplifier, 80A
76	C0100EM	1	*Gasket
77	U0103FP	2	*Screen
78	X0116CS	2	10-32 x1 Pan H. Screw with washer
79	0006535	2	10-32 x 3/4 Fil. H. Screw with lockwasher
80	X0100MM	3	1/4-28 x 3/4 Socket H. Cap Screw

* Denotes parts more frequently replaced.

Integral Air Filter Set and Mounting Set

Item	Part No.	Qty	Description
1	0050325	1	Connector Assembly (ANSI connection) (prior to Aug. 1987)
	0050386	1	Connector Assembly (JIS connection) (prior to Aug. 1987)
	G9611AW	1	Connector Assembly (ANSI connection) (since Aug. 1987)
	G9611AD	1	Connector Assembly (JIS connection) (since Aug. 1987)
2	0050332	1	Elbow Assembly (ANSI connection) (prior to Aug. 1987)
	0050392	1	Elbow Assembly (JIS connection) (prior to Aug. 1987)
	G9611CN	1	Elbow Assembly (ANSI connection) (since Aug. 1987)
	G9611CD	1	Elbow Assembly (JIS connection) (since Aug. 1987)
3	0052702	1	Tube (prior to Aug. 1987)
	F9101EN	1	Tube (since Aug. 1987)
4	F9147MQ	2	1/4-20 x 1/2 H. H. Screw
5	F9140DB-C	1	Filter Regulator (ANSI connection)
	F9140DA-C	1	Filter Regulator (JIS connection)
6	Below	1	Elbow
	G9612DB		For JIS connection } Prior to Apr. 1998
	G9612DD		For ANSI connection } Prior to Apr. 1998
	F9140FH		For JIS connection } Since Apr. 1998
	F9140FJ		For ANSI connection } Since Apr. 1998
7	F9145BF	1	Plug (JIS connection)
	D0114PN	1	Plug (ANSI connection)
8	See Table 2	1	Pressure Gauge
9	F9101KY	1	Mounting Set Assembly
10	D0117CC	2	Spacer
11	D0117XL-A	1	U-Bolt / Nut Assembly
12	B0110FK	1	Bracket
13	Below	2	PH 3/8F-1 3/4H Screw
	F9147BQ		S10C,S12C or S15C Carbon steel (standard)
	F9101YW		SUS 304 Stainless Steel

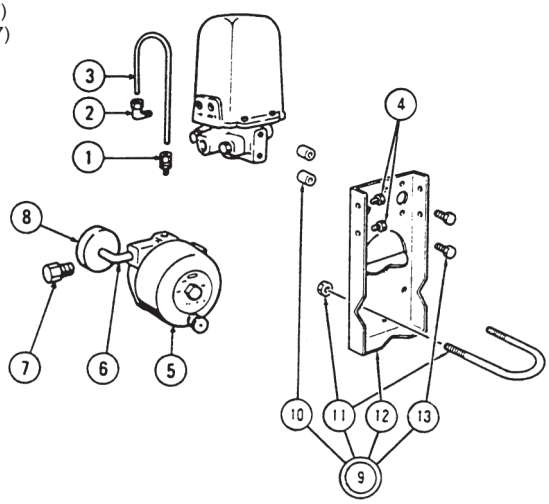

Zero Elevation Kit (Suffix Code : L)

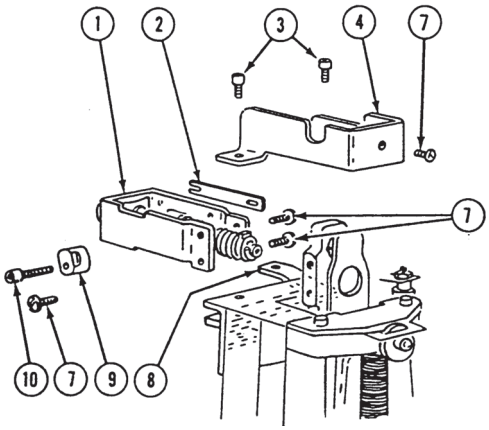

Item	Part No.	Qty	Description
-	U0122BZ	1	Zero Elevation Kit
1	U0122BB	1	Spring Assembly
2	U0102TF	1	Scale (MIN-MAX)
3	A0100YC	2	6-32 x 1/4 Socket H. Screw
4	U 0122BT	1	Bracket
7	F9147CV	4	5-40 x 5/32 Pan H. Screw
8	F9100EW	1	Bracket
9	U0122BX	1	Stop
10	U0122BY	1	5-40 x 1/2 Socket H. Screw

Table 2. Pressure Gauge

Suffix Code	Prior to Apr.1998	Since Apr.1998
/G (N) AS-FM	G9615AA	G9615AT
/G (N) AS-FE	G9615AE	G9615EK
/G (N) AS-FP (0 to 200kPa)	G9615AH	G9615EA
/G (N) AS-FB (0 to 2 bar)	G9615AM	G9615EC

Note) In order for gauge shipped befor April, 1998 to be replaced, please use gauge and elbow, which part numbers are effective April, 1998.

Zero Suppression Kit (Suffix Code : R)

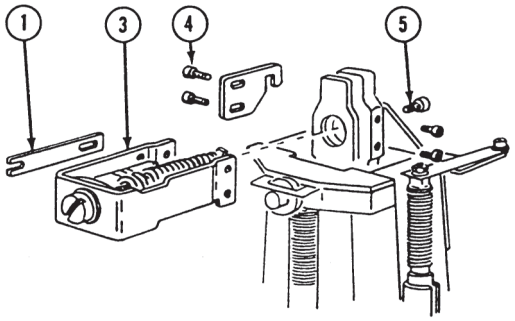

Item	Part No.	Qty	Description
-	U0122BN	1	Zero Suppression Kit
1	U0102TF	1	Scale (MIN-MAX)
3	U0122BB	1	Spring Assembly
4	X0116ET	2	5-40 x 1/4 Screw
5	F9147CV	3	5-40 x 3/16 Screw