User's Manual

IRP20H Electronic Cooler Unit

IM 11G03C01-01E

YOKOGAWA ◆
Yokogawa Electric Corporation

IM 11G03C01-01E
1st Edition

● Before Use

This manual is written for the persons that will be using this product.

Before using this product, read this manual completely. After reading the manual, store it in a location where it can be easily reached whenever necessary.

The specifications and external appearance of the product, for the sake of improvement, may be subject to change without notice.

Regarding the IRP20 Portable Gas Analyzer, refer to IM 11G03B01-01E.

● Limitation of Warranty and Liability

This product has a one year warranty beginning from the time of delivery. If, during this period, any problem arises do to the fault of YOKOGAWA, YOKOGAWA will perform all necessary repairs or replacements free of charge. However, any problems that may occur due to the conditions listed below are not covered under this warranty.

- Problems resulting from misoperation.
- Repairs or alterations not performed by YOKOGAWA.
- Use in an environment outside of the product's specifications.
- Damage that YOKOGAWA is not responsible for.
- Damage resulting from natural disaster.
- Wear of any consumable parts (refer to the consumable parts list in section 7.3.1)

YOKOGAWA will not be responsible for any damage or trouble that may arise from the result of performing any prohibited procedures listed in this manual or from not following the procedures listed in this manual.

YOKOGAWA shall not be liable for any damages resulting from any malfunctions of this product, any erasure of data, or any other uses of this product.

YOKOGAWA also shall not be liable for any damages resulting from any malfunctions of this product, any erasure of data, or any other uses of this product.

The contents of this manual may be subject to change without warning for the sake of product improvement.

The utmost care has been taken by the time of delivery regarding this product and this manual to ensure the customer's complete satisfaction. However, if you notice any inadequacies, mistakes, or missing explanations, please contact us at the address or the end cover.

IM No. IM 11G03C01-01E
1st Edition: Sept. 2002 (YK)

● Warnings

In this manual, the following cautions are listed together with a corresponding signal word. In order to use this instrument safely, be sure to always adhere to the instructions given within these cautions.

• Electrical hazard label

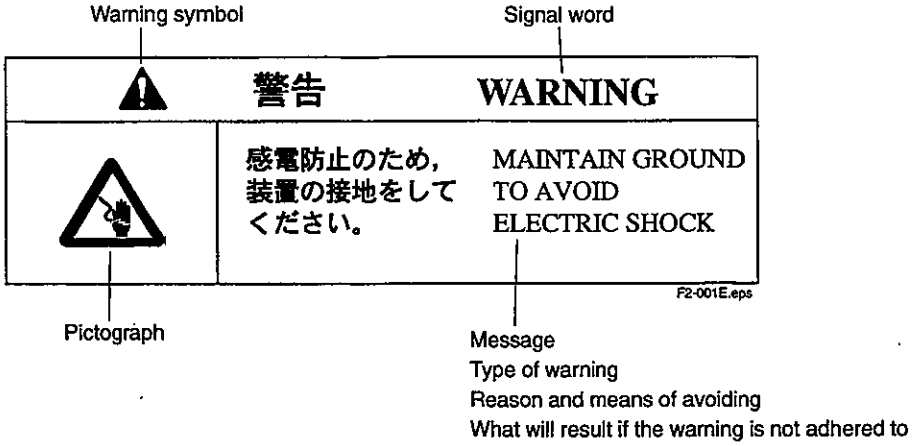

• There are four types of warning labels that are located on the instrument

• High temperature label

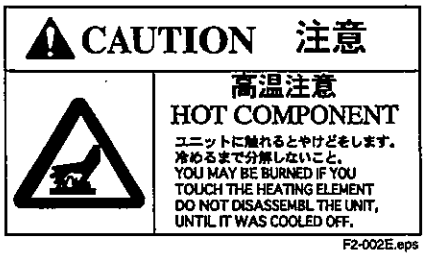

• Meaning of the signal words are as follows

WARNING : Immediate danger. If not avoided, death or serious injury will likely result.

CAUTION : Danger is present. If not avoided, light or mild injury may result. Also used to warn against unsafe procedures.

• Warnings or Cautions listed in this manual are presented as shown below.

WARNING Use only the power cable provided with the IRP20H. A two-prong power cable will not ground the unit (as it lacks a grounding prong) and can result in electrocution.

CAUTION The glass capillary is made of glass and should be handled carefully.

● Locations of the Warning Labels

The locations of the warning labels on the analyzer interior are as shown below.

Whenever the cover is removed to replace consumable parts, always turn the power off first and proceed with the utmost caution.

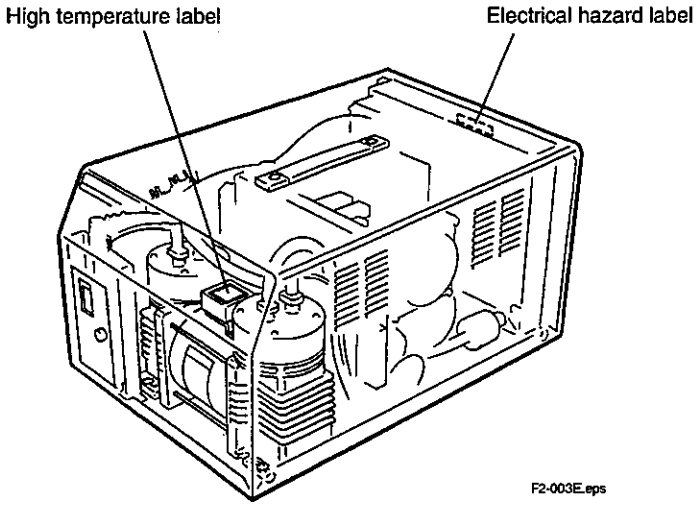

Location of warning labels

● Safety precautions

When using the IRP20H electronic cooler unit, in order to use the instrument safely and obtain accurate measurements, be sure to follow the items listed below.

- Be sure to use the instrument in a location that confirms to the specifications listed in "3 Setup"
- Do not use the instrument where there is a relatively high concentration of the measured gas in the atmosphere.
- When using, transporting, or storing the instrument, never lay it on its side.
- Use the exclusive accessory.
- Firmly connect the exhaust line and allow the gas to be exhausted to an area where good ventilation is maintained without any back pressure.
- Have the dust contained in the sample gas be less than 0.1 g/m^3. When using a sample gas with a high dust content, suck up the sample gas with a probe equipped with a filter.
- Have the temperature of the sample gas be below 40 °C.

Contents

1. Introduction

The Electronic Cooler Unit is designed to remove moisture and corrosive gases (the Cl_2 scrubber is optional) from flue gas and combustion equipment exhaust. When the IRP20H is connected to the IRP20 Portable Gas Analyzer, continuous measurement for up to 3 days is possible.

2. Name and Function of Parts

2.1 Front panel

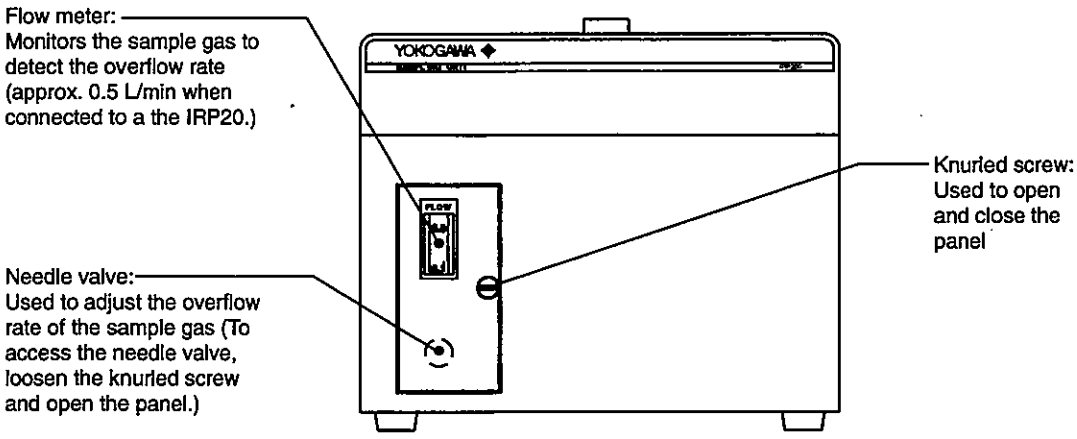

Front panel

F1-1E.eps

2.2 Rear panel

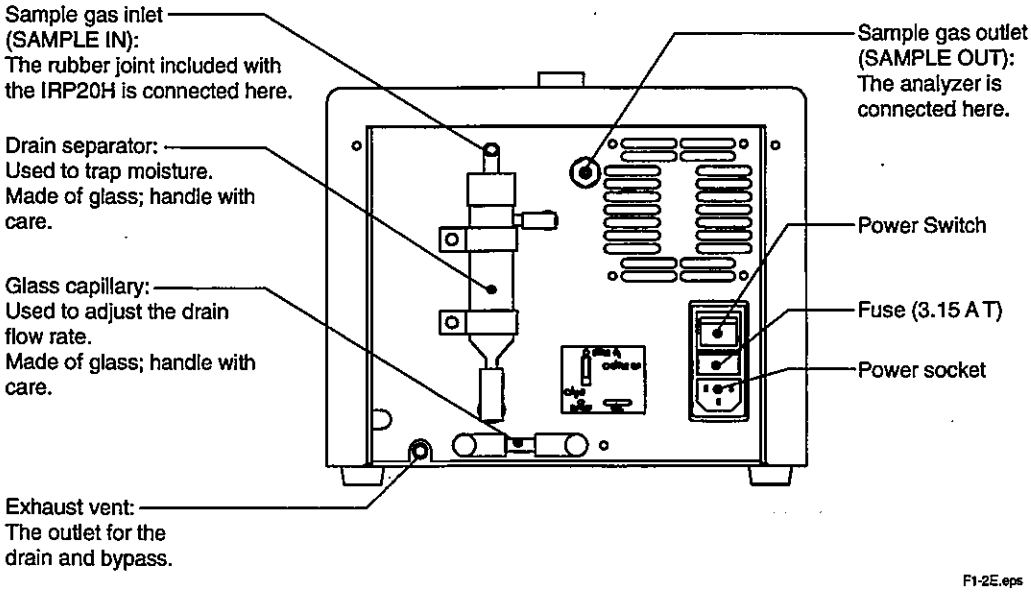

F1-2E.eps

3. Setup

3.1 Conditions

The IRP20H is designed for use under ordinary environmental conditions, not for use under special conditions. Use the IRP20H in a location where:

- The temperature ranges between 5 °C and 40 °C, with no sudden temperature fluctuations
- There is no direct sunlight or heat emitted by heating devices
- Amounts of dust are minimal
- There is no severe vibration
- There are no strong electric or magnetic fields
- There are no corrosive gases
- Maximum relative humidity 80%
  For temperatures up to 31 °C decreasing linearly to 50% at 40 °C
- Altitude up to 2000 m
- The unit will not be exposed to rainwater or other water droplets

3.2 Connecting the tubing

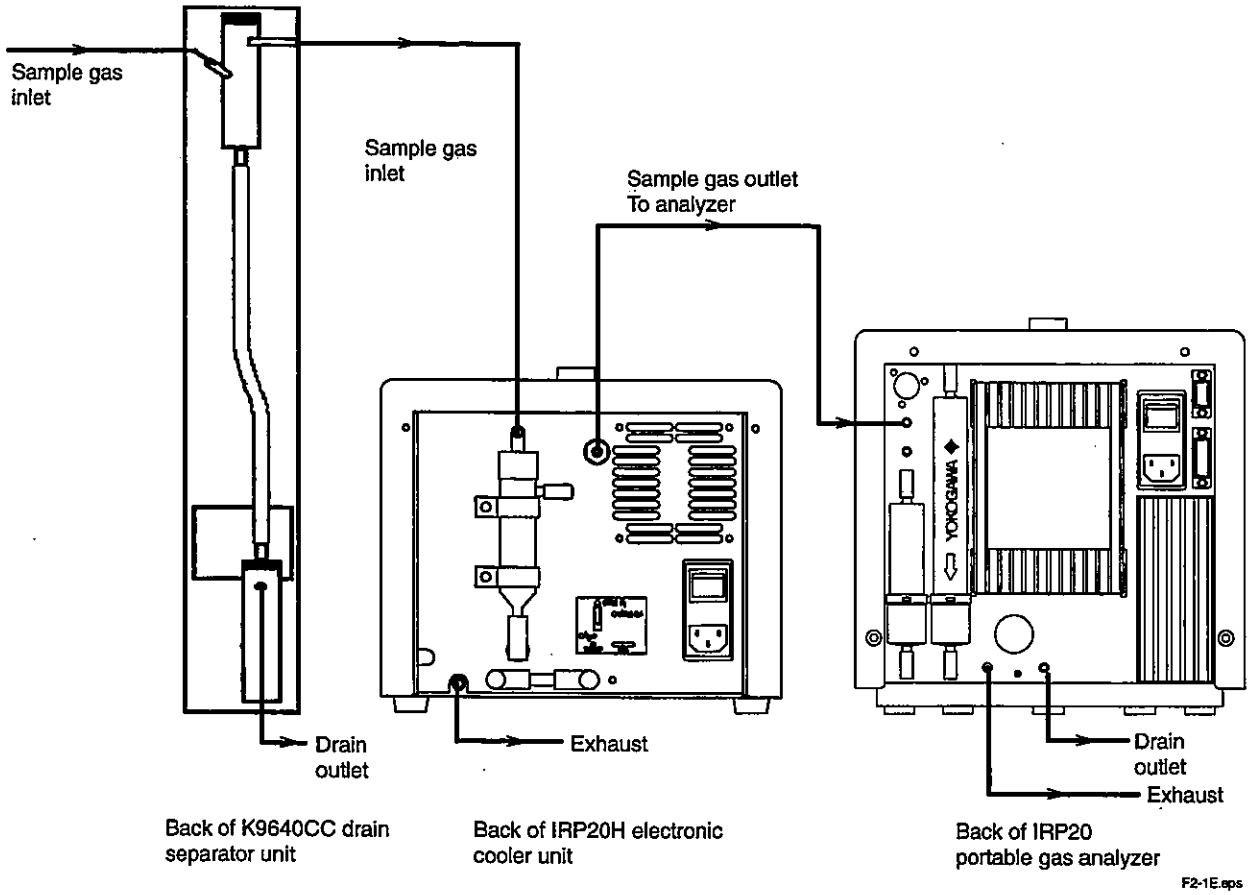

● **Sample gas inlet (8 mm/6 mm diameter hose end)**

Connect a Teflon tube (8 mm/6 mm diameter) here after connecting the rubber joint included with the IRP20H.

⚠ NOTE As the sample gas is collected through suction, avoid pressure loss by making sure that the sampling line is not bent at an acute angle.

● **Sample gas outlet (joint for the 6 mm/4 mm diameter Teflon tube)**

Use a 6 mm/4 mm diameter Teflon tube.

⚠ NOTE Avoid pressure loss by making sure that the sampling line is not bent at an acute angle.

● **Exhaust vent (8 mm/6 mm diameter hose end)**

Use a 7 mm inner diameter tube.

POISONOUS GAS

⚠ WARNING This analyzer measures nitrogen oxide, sulfur dioxide, carbon monoxide, which is poisonous gas. Firmly connect the exhaust line and allow the gas to be exhausted to an area where good ventilation is maintained without any back pressure.

⚠ NOTE Avoid pressure loss by making sure that the exhaust line is not bent at an acute angle (back pressure : within ±1 kPa).

⚠ NOTE Use the IRP20H in a location where discharge from the drain and sample gas line will not cause problems.

⚠ NOTE Make sure the drain outlet is not blocked.

3.3 Connecting the power supply

WARNING Use only the power cable provided with the IRP20H. A two-prong power cable will not ground the unit (as it lacks a grounding prong) and can result in electrocution.

Plug the provided power cable into an electrical outlet with the designated power ratings.

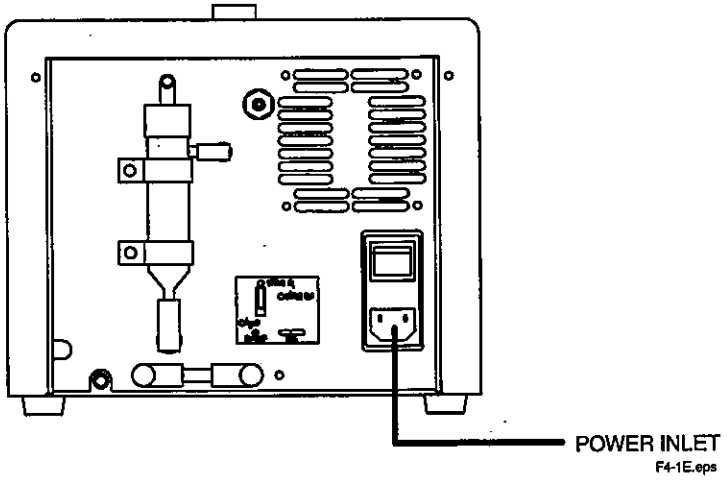

Connecting the IRP20H to the power supply

4. Operations

4.1 Preparations

- Check the voltage and capacity of the power supply. The power specifications are printed on the rating nameplate on the rear panel.
  100 to 120 V AC, 200 to 240 V AC; 50/60 Hz; maximum 200 VA, normal 150 VA
- Make sure all wiring and tubing is connected.

4.2 Start-up and stop

4.2.1 Start-up

1. Turn on the power
   Move the power switch on the rear panel to ON.
2. Warmup
   During warmup, do not disconnect the tube from the sample gas outlet or allow gas into the analyzer.
   Allow roughly 30 minutes for warmup.

4.2.2 Stop

1. Draw out the air from the sample inlet of the sampling unit.
2. Purge the sample line for over 5 minutes.
3. Turn off the power switch.

4.3 Measurement

After connecting an already-operating the IRP20 gas analyzer to the tubing, use the needle value inside the panel to adjust so that the front panel's flow meter reads roughly 0.5 L/min. The IRP20H is now ready.

5. Maintenance

5.1 Daily maintenance

To keep the IRP20H in good conditions for a long time, perform the maintenance and inspection and replace parts as shown below. Depending on the operating conditions and the types of gas measured, parts may have to be replaced more frequently than stated below.

Check point	Check period	What to check
Drain separator	Eeath time the unit is used	Proper separation in the drain
Glass capillary		Absence of blockage
Overflow rate		Approx. 0.5 L/min

T6-1E.eps

5.1.1 Cleaning the glass capillary

The glass capillary must be cleaned when it becomes clogged.

CAUTION The glass capillary is made of glass and should be handled carefully.

1. Move the power switch on the rear panel to OFF.
2. Disconnect the rubber joint on the rear panel and remove the glass capillary.
3. Clean with glass capillary with cleaning solution to remove any blockage. An example of cleaning is shown on the next page.
4. After cleaning, use a dry cloth to wipe off any water on the glass capillary.
5. Attach the rubber joint and attach the glass capillary to the IRP20H.

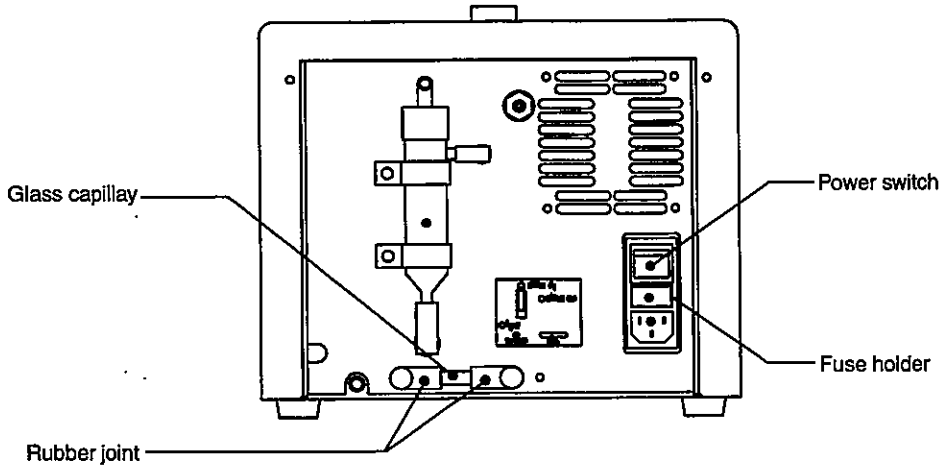

F6-1E.eps

Example of cleaning

1. After removing the glass capillary, attach soft tubes to either end.
2. Attach one of the soft tubes to an inhaler and use it to draw cleaning solution into the glass capillary as shown in the illustration. Type of cleaning solution to use: Ethyl alcohol or a solution of water and an alkaline cleaner
3. Rinse out the cleaning solution by drawing water through the glass capillary.
4. After cleaning, use a dry cloth to wipe off any water on the glass capillary.

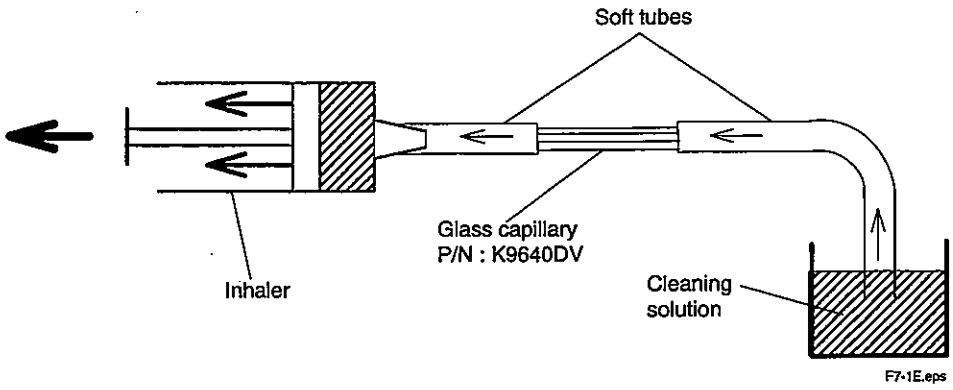

5.1.2 Replacing the fuse

1. Pull the fuse holder lower side.
2. Remove right side fuse.

(Left side fuse holder is spare fuse holder.)

5.2 Periodic inspection

What to check	How often to check	What to check for
Tubing	Every 6 months	Dirty tubing
Pump	Every 6 months	Replace the diaphragm and lead valve
Sample gas flow rate during sampling	Every 6 months	Approx. 2 L/min

T7-2E.eps

5.2.1 Replacing the pump diaphragm

WARNING Opening the cover while the unit is on can result in electrocution. Always turn off the power at the source before opening the cover.

CAUTION The pump is hot. Allow sufficient time for it to cool before replacing it or another part.

1. Move the power switch on the rear panel to OFF.
2. Remove the unit cover's six (6) attaching screws and remove the cover.

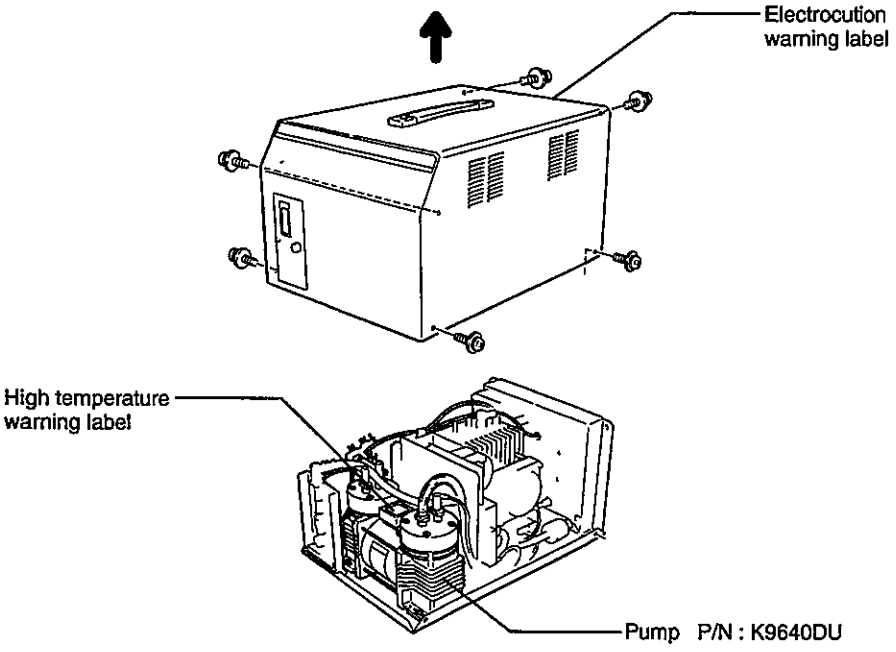

F8-1E.eps

3. Remove the four (4) screws anchoring the pump, then remove the pump.

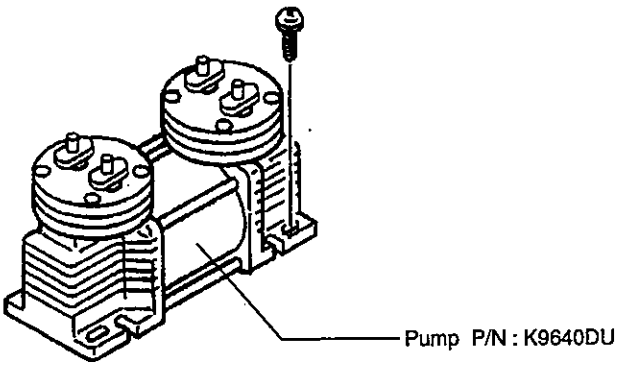

F8-2E.eps

4. Remove the four (4) screws anchoring the pump head, then remove the pump head.
5. Using the pump wrench, remove the diaphragm.
6. Replace the lead valve and the diaphragm.
7. After replacement, reassemble by reversing the above order.

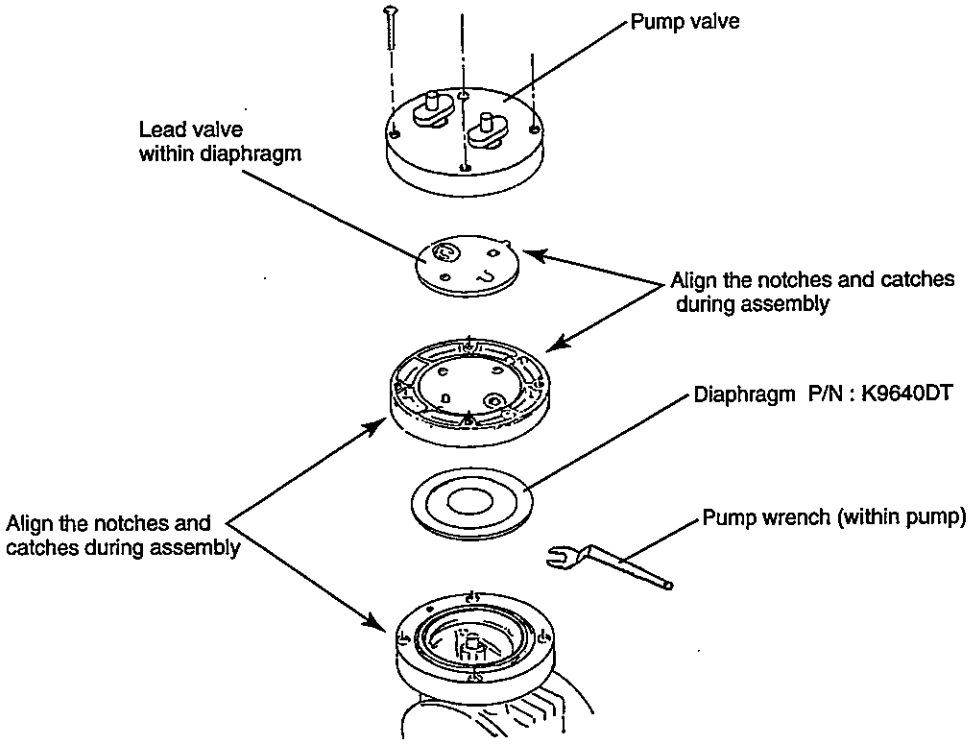

F9-1E.eps

5.2.2 Checking the sampling flow rate

1. Disconnect tube from the sample gas inlet on the rear panel, then attach a flow meter (with a measuring range of 0 L/min to 2 L/min) between the tube and the IRP20H.
2. Verify that the flow meter indicates a flow rate of roughly 2L/min.

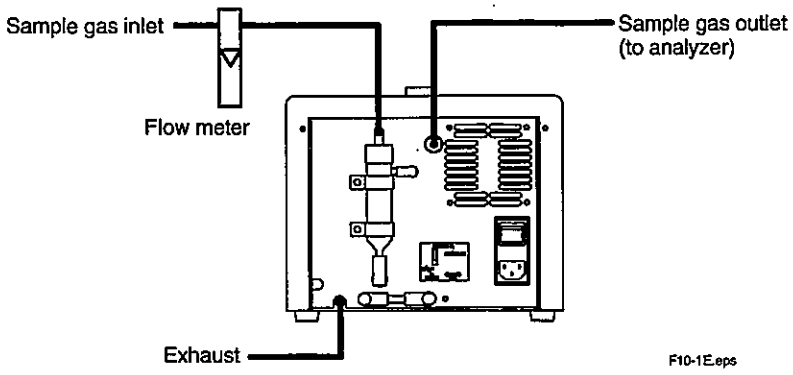

5.2.3 Replacement of $C\ell_2$ scrubber (when used with IRP20H option)

CAUTION The scrubber unit gets very hot, before disassembling it turn off the power and for it to cool.

● **Removal**

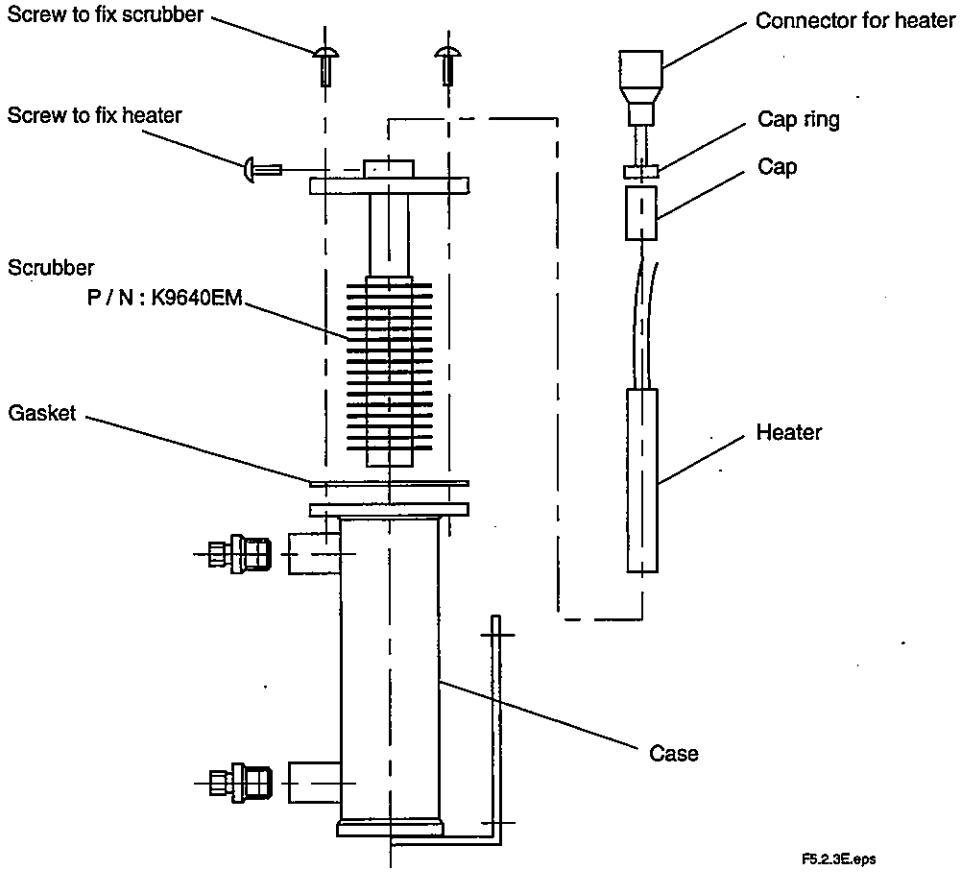

1. Remove the cover of IRP20H.
2. Remove the connector of heater,
3. Remove the upside fixing screws of scrubber.
4. Remove the scrubber.
5. Remove the heater fixing screw.
6. Replace the scrubber new one, replace the gasket same time.

● **Fixing**

Reassemble in the reverse order

5.3 Troubleshooting

Problem	Cause	What to do
The specified flow rate is not being achieved. (0.5 L/min)	The pump has lost its capacity.	Replace the diaphragm and the lead pump.
	The pump is not operating.	Replace the pump.

T10-1E.eps

5.4 List of replacement parts

Part	Part number	Quantity
Diaphragm	K9640DT	2
Pump	K9640DU	1
$C\ell_2$ scrubber	K9640EM	1

T10-2E.eps

5.5 Accessories

Accessory	Part number	Details
Glass capillary	K9640DV	70 to 120 mL/min, 19.6 kPa Quantity: 1
Joint	K9640DW	Diameter: 11 mm/7.5 mm Quantity: 1
Tube	K9640DX	Diameter: 8 mm/6 mm (Teflon) Length: 5 m
Tube	K9640DY	Diameter: 6 mm/4 mm (Teflon) Length: 1 m
Tube	K9640DZ	Diameter: 10 mm/7 mm Length: 1 m
Cord set	K9640EJ	1 set
Pump wrench	——	Quantity: 1 (included with pump)
Fuse	K9640EL	3.15 A T Quantity: 1

T11-1E.eps

6. Data

6.1 Specifications

Model :	IRP20H
Intended use:	Removal of moisture and corrosive gases from flue gas and combustion equipment exhaust (Cℓ2 scrubber optional)
Method of sampling:	Pump suction
Suitable materials for gas connections:	Ti, SUS, PVC, PTFE, FKM, PVDF, glass
Power supply:	100, 115, 220, 230, 240V AC ; 50/60 Hz
Power consumption:	200 VA (max.), 150 VA (normal)
Sampling rate:	Approx. 2 L/min
Sample discharge rate:	Approx. 0.5 L/min
Dehumidification capacity:	15 °C (saturation) (*1)
Operating temperature range:	5 °C to 40 °C (*1)
Operating humidity range:	Maximum relative humidity 80% (*1) For temperatures up to 31 °C decreaging linearly to 50% at 40 °C
Altitude:	Up to 2000 m
External dimensions:	260 (W)×223 (H)×375 (D) mm
Weight:	Approx. 10 kg
Sample gas conditions Temperature:	Ambient temperature (*1)
Dust:	0.1 g/m³ (at maximum)
Moisture:	No more than 20% by volume
Pressure:	Within 5 kPa of atmospheric pressure (8 mm/6 mm diameter Teflon tube, maximum length of 50 m)

(*1) No condensate at sample gas outlet.

● **Model and Suffix codes**

Model	Suffix code		Option code	Description
IRP20H	----------		----------	Electronic Cooler Unit
Scrubber (note 1)	-A		----------	With chlorine scrubber
	-N		----------	Not available
Power supply		A	----------	100V AC 50/60Hz
		B	----------	115V AC 50/60Hz
		C	----------	220V AC 50/60Hz
		D	----------	230V AC 50/60Hz
		E	----------	240V AC 50/60Hz
Panel		E	----------	English

(note 1) Pleas specify it in the application for the waste incineration exhaust gas measurement

T6.1.eps

6.2 External Dimensions

- IRP20H Electronic Cooler Unit
- K9640CC Drain Separator

Drawings

Model IRP20H
Electronic Cooler Unit

Unit : mm

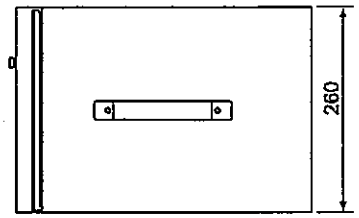

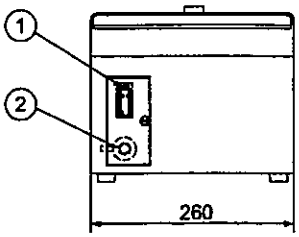

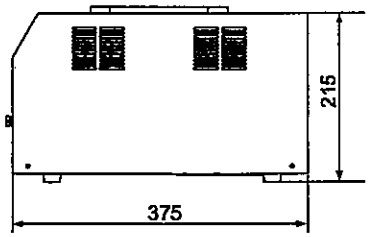

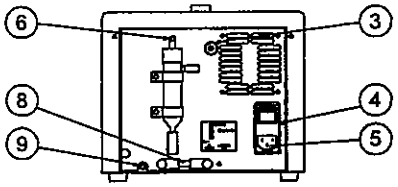

Weight :Approx. 10Kg

NO.	Name	Notes
1	FLOWMETER	
2	NEEDLE VALVE	NV-1
3	SAMPLE OUTLET	for Ø6/Ø4 teflon tube
4	FUSE	
5	POWER CONNECTOR	100 V AC
6	SAMPLE INLET	for Ø8/Ø6 hose-end
8	CAPILLARY	
9	EXHAUST	for Ø8/Ø6 hose-end

Unless otherwise specified,differences in the dimensions are specified as: General tolerance = ± (Criteria of tolerance class it18 in JIS B0401-1986) - 2.

YOKOGAWA ◆
Yokogawa Electric Corporation

SD 11G03C01-01E 1/2
1st Edition : Aug. 2002 (YK)

Flow -Diagram

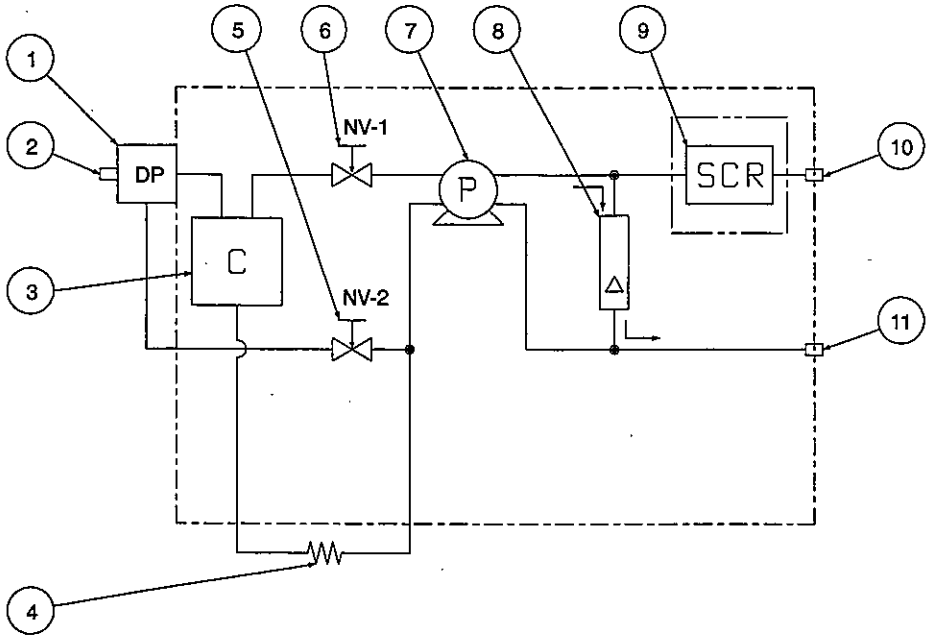

NO.	PARTS NAME	NOTES
1	DRAIN POT	
2	SAMPLE INLET	for Ø8/Ø6 hose-end
3	THERMO-ELECTRIC DEHUMIDIFIER	
4	CAPILLARY	
5	NEEDLE VALVE	
6	NEEDLE VALVE	
7	PUMP	
8	FLOW METER	
9	SCRUBBER	OPTION
10	SAMPLE OUTLET	for Ø6/Ø4 teflonr tube
11	EXHAUST	for Ø8/Ø6 hose-end

Unless otherwise specified,differences in the dimensions are specified as: General tolerance = ± (Criteria of tolerance class it18 in JIS BO401-1986) - 2.

Drawings

K9640CC
Drain Separator for IRP20 Portable Gas Analyzer

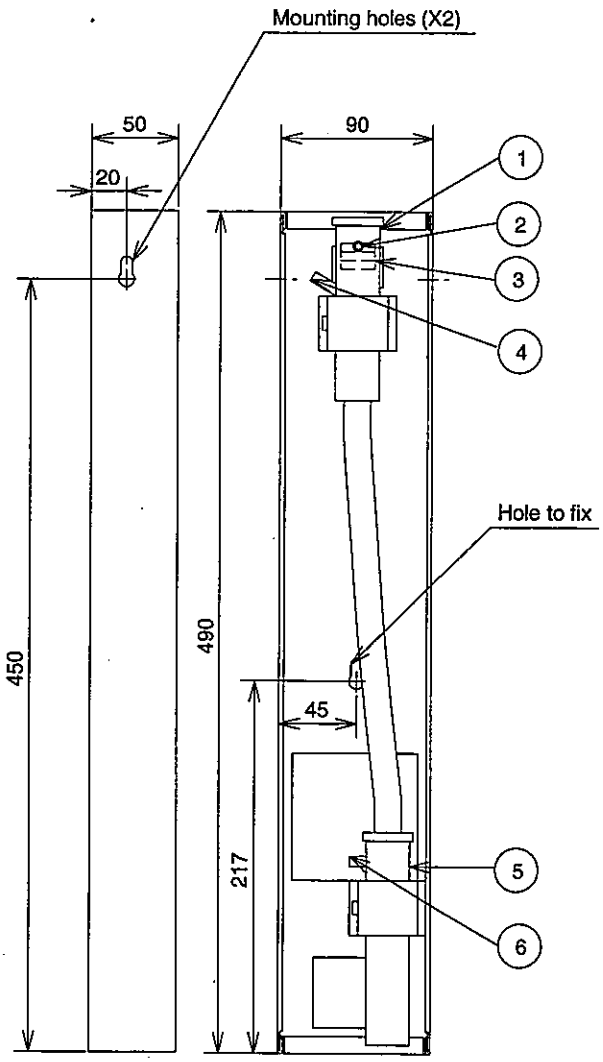

NO.	Name	Notes
1	DRAIN SEPARATOR	
2	SAMPLE OUTLET	for Ø6/Ø4 hose-end
3	FILTER	
4	SAMPLE INLET	for Ø6/Ø4 hose-end
5	DRAIN TRAP	
6	DRAIN OUTLET	for Ø6/Ø4 hose-end

Unit : mm

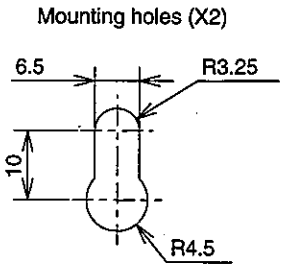

Weight : Approx. 1 kg

Unless otherwise specified,differences in the dimensions are specified as: General tolerance = ± (Criteria of tolerance class it18 in JIS BO401-1986) - 2.

SD 11G03C01-11E
1st Edition : Aug. 2002 (YK)

Customer Maintenance Parts List

Model IRP20H
Electronic Cooler Unit

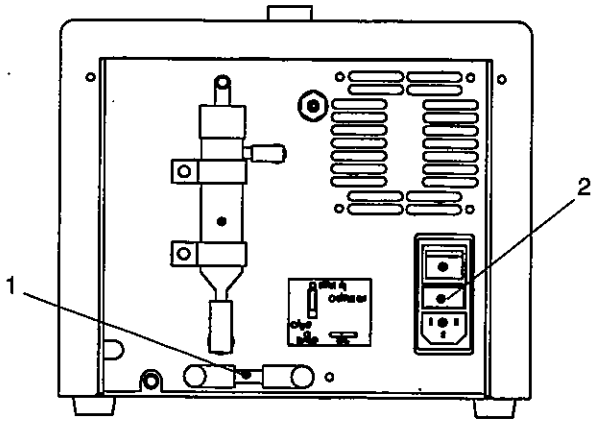

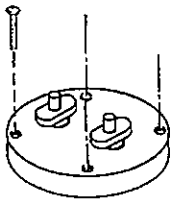

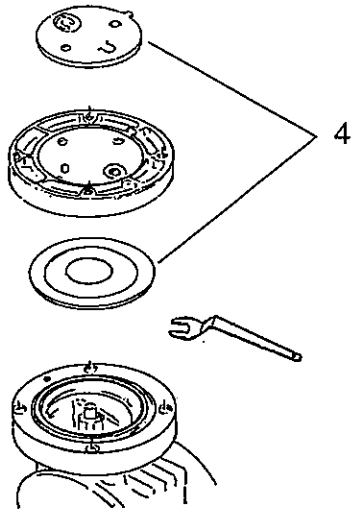

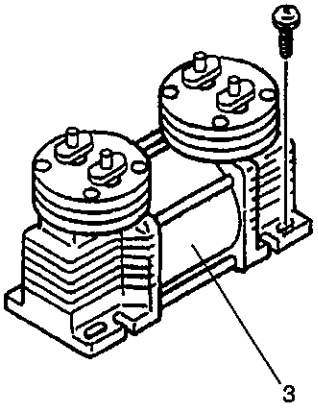

Item	Part No.	Qty.	Description
1	K9640DV	1	Glass capillary
2	K9640EL	1	Fuse 3.15 AT
3	K9640DU	1	Pump with wrench
4	K9640DT	1	Diaphragm (2 pieces)

YOKOGAWA
Yokogawa Electric Corporation

CMPL 11G03C01-01E
1st Edition : Aug. 2002 (YK)

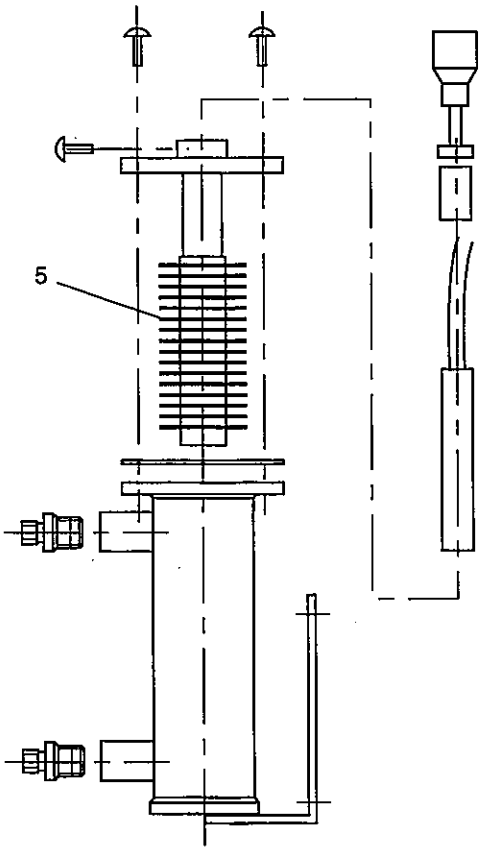

Item	Part No.	Qty.	Description
5	K9640EM	1	$C\ell_2$ scrubber (Option)

Revision Record

Manual Title : IRP20H Electronic Cooler Unit
Manual Number : IM 11G03C01-01E

Edition	Date	Remark (s)
1st	Sept. 2002	Newly published