User's
Manual

Model AV550G
Zirconia Oxygen Analyzer
Averaging Converter

IM 11M12D01-01E

YOKOGAWA
Yokogawa Electric Corporation

IM 11M12D01-01E
10th Edition

Introduction

The EXAxt Series AV550G Zirconia Oxygen Analyzer Averaging Converter is designed for oxygen measurement at multiple points in flue ducts of industrial furnaces and can be used to optimize the combustion process. For the AV550G system, various types of EXAxt ZR Series detectors as well as optional accessories are available. The best measurement can be achieved by selecting instruments appropriate to your application.

This manual provides information, such as installation, operation, inspection and maintenance procedures, about the instruments used in the AV550G averaging converter measurement system. Any sections concerning instruments not included in your system may be skipped.

Before using the instruments, read any descriptions related to your instruments and system to ensure the best performance.

Regarding the HART communication, refer to IM 11M12D01-51E. IM 11M12D01-51E has been published as “Model EXAxt AV550G HART protocol.”

The models and description items in this manual are as follows:

Models and descriptions in this manual

Model	Product Name	Description in this manual				
		Specification	Installation	Operation	Maintenance	CMPL
ZR22G	General-purpose detector	○	○	○	○	○
ZR22G	High temperature detector (0.15m)	○	○	○	○	
AV550G	Averaging Converter	○	○	○	○	○
ZO21R	Probe protector	○	○			
ZO21P	High temperature probe adapter	○	○			○
ZA8F	Flow setting unit (for manual calibration use)	○	○	○		
–	Auxiliary ejector assembly for high temperature use (Part No. E7046EC, E7046EN)	○	○			○
–	Calibration gas unit case (Part No. E7044KF)	○	○			
–	Check valve (Part No. K9292DN, K9292DS)	○	○			
–	Dust filter for the detector (Part No. K9471UA)	○	○			
–	Dust guard protector (Part No. K9471UC)	○	○			

CMPL : Customer Maintenance Parts List

All Rights Reserved Copyright © 2004, Yokogawa Electric Corporation

The related documents are as follows:

Model	Title	Manual No.
AV550G	Model AV550G Zirconia Oxygen Analyzer Averaging Converter	GS 11M12D01-01E
AV550G	Model AV550G Zirconia Oxygen Analyzer Averaging Converter	IM 11M12D01-01E (this manual)
AV550G-x-xx-x-x-E	Model EXAxt AV550G HART Protocol	IM 11M12D01-51E
ZR22G	Model ZR22G, ZR402G Zirconia Oxygen/ Humidity Analyzer	IM 11M12A01-02E
ZR22S	Model ZR22S, ZR402G Separate type Explosion-proof Zirconia Oxygen Analyzer	IM 11M13A01-02E

The "E" or "EN" in the document number is the language code.

An exclusive User's Manual might be attached to the products whose suffix codes or option codes contain the code "Z" (made to customers' specifications). Please read it along with this manual.

This manual consists of twelve chapters. Please refer to the reference chapters for installation, operation and maintenance.

Table of Contents

Chapter	Outline	Release to		
		Installation	Operation	Maintenance
1. Overview	Equipment models and system configuration examples	○	△	○
2. Specifications	Standard specification, model code (or part number), dimension drawing for each equipment	◎	○	○
3. Installation	Installation method for each equipment	◎		△
4. Piping	Examples of piping in three standard system configurations	◎		△
5. Wiring	Wiring procedures such as "Power supply wiring", "output signal wiring" or others	◎		△
6. Components	Major parts and function are described in this manual	△	○	○
7. Startup	Basic procedure to start operation of AV550G. Chapter 7 enables you to operate the equipment immediately.		◎	△
8. Detailed Data Setting	Details of key operations and displays		○	△
9. Calibration	Describes the calibration procedure required in the course of operation.		○	△
10. Other Functions	Other functions described		○	△
11. Inspection and Maintenance	How to conduct maintenance of AV550G and procedures for replacement of deteriorated parts		○	◎
12. Troubleshooting	This chapter describes measures to be taken when an abnormal condition occurs.		△	◎
CMPL (parts list)	User replaceable parts list		△	○

◎ : Read and completely understand before operating the equipment.
○ : Read before operating the equipment, and refer to it whenever necessary.
△: Recommended to read it at least once.

For the safe use of this equipment

WARNING

The AV550G is very heavy. Handle it with care. Be sure not to accidentally drop it. Handle safely to avoid injury. When carrying the AV550G Averaging Converter, make sure this is done by two or more people.

Connect the power supply cord only after confirming that the supply voltage matches the rating of this equipment. In addition, confirm that the power is switched off when connecting power supply.

Some process gas is dangerous to people. When removing this equipment from the process line for maintenance or other reasons, protect yourself from potential poisoning by using a protective mask or ventilating the area well.

CAUTION

The cell (sensor) at the tip of the detector is made of ceramic (zirconia element). Do not drop the detector or subject it to pressure stress.

- Do NOT allow the sensor (probe tip) to make contact with anything when installing the detector.
- Avoid any water dropping directly on the probe (sensor) of the detector when installing it.
- Check the calibration gas piping before introducing the calibration gas to ensure that there is no leakage of the gas. If there is any leakage of the gas, the moisture drawn from the sample gas may damage the sensor.
- The detector (especially at the tip) becomes very hot. Be sure to handle it with gloves.

(1) About This Manual

- This manual should be passed on to the end user.
- The contents of this manual are subject to change without prior notice.
- The contents of this manual shall not be reproduced or copied, in part or in whole, without permission.
- This manual explains the functions contained in this product, but does not warrant that those will suit the particular purpose of the user.
- Every effort has been made to ensure accuracy in the preparation of this manual.
  However, should any errors or omissions come to the attention of the user, please contact the nearest Yokogawa Electric representative or sales office.
- This manual does not cover the special specifications. This manual may not be changed on any change of specification, construction and parts when the change does not affect the functions or performance of the product.
- If the product is used in a manner not specified in this manual, the safety of this product may be impaired.

(2) Safety and Modification Precautions

- Follow the safety precautions in this manual when using the product to ensure protection and safety of personnel, product and system containing the product.

(3) The following safety symbols are used on the product as well as in this manual.

WARNING

This symbol indicates that the operator must follow the instructions laid out in this manual in order to avoid the risk of personnel injury electric shock, or fatalities. The manual describes what special care the operator must exercise to avoid such risks.

CAUTION

This symbol indicates that the operator must refer to the instructions in this manual in order to prevent the instrument (hardware) or software from being damaged, or a system failure from occurring.

NOTE

This symbol draws attention to information essential for understanding the operation and functions.

NOTICE

Specification check

When the instrument arrives, unpack the package with care and check that the instrument has not been damaged during transportation. In addition, please check that the specification matches the order, and required accessories are not missing. Specifications can be checked by the model codes on the nameplate. Refer to Chapter 2 Specifications for the list of model codes.

Details on operation parameters

When the AV550G Averaging Converter arrives at the user site, it will operate based on the operation parameters (initial data) set before shipping from the factory.

Ensure that the initial data is suitable for the operation conditions before conducting analysis. Where necessary, set the instrument parameters for appropriate operation.

For details of setting data, refer to Chapters 7 to 10.

When user changes the operation parameter, it is recommended to note down the changed setting data.

Product Disposal:

The instrument should be disposed of in accordance with local and national legislation/regulations.

◆ After-Sales Warranty

- **Do not modify the product.**

- **Yokogawa warrants the product for the period stated in the pre-purchase quotation. Yokogawa shall conduct defined warranty service based on its standard.**

- **During the warranty period, for repair under warranty carry or send the product to the local sales representative or service office. Yokogawa will replace or repair any damaged parts and return the product to you.**
  - Before returning a product for repair under warranty, provide us with the model name and serial number and a description of the problem. Any diagrams or data explaining the problem would also be appreciated.
  - If we replace the product with a new one, we won't provide you with a repair report.

- **In the following cases, customer will be charged repair fee regardless of warranty period.**
  - Failure of components which are out of scope of warranty stated in instruction manual.
  - Failure caused by usage of software, hardware or auxiliary equipment, which Yokogawa did not supply.
  - Failure due to improper or insufficient maintenance by user.
  - Failure due to modification, misuse or outside-of-specifications operation which Yokogawa does not authorize.
  - Failure due to power supply (voltage, frequency) being outside specifications or abnormal.
  - Failure caused by any usage out of scope of recommended usage.
  - Any damage from fire, earthquake, storms and floods, lightning, disturbances, riots, warfare, radiation and other natural changes.

- **Yokogawa does not warrant conformance with the specific application at the user site. Yokogawa will not bear direct/indirect responsibility for damage due to a specific application.**

- **Yokogawa will not bear responsibility when the user configures the product into systems or resells the product.**

- **Maintenance service and supplying repair parts will be covered for five years after the production ends. For repair for this product, please contact the nearest sales office described in this instruction manual.**

Blank Page

Model AV550G
Zirconia Oxygen Analyzer Averaging Converter

IM 11M12D01-01E 10th Edition

CONTENTS

Introduction i

- ◆ For the safe use of this equipment iii
- ◆ NOTICE iv
- ◆ CE marking products v
- ◆ After-Sales Warranty vi

1. Overview 1-1

1.1 System Configuration 1-1
1.1.1 System Configuration Using Flow Setting Units for Manual Calibration 1-1
1.1.2 System Configuration to Perform Automatic Calibration 1-2
1.2 System Components 1-3
1.2.1 System Components and Their Applicability 1-3
1.2.2 Detectors and Accessories 1-3

2. Specifications 2-1

2.1 General Specifications 2-1
2.2 General-purpose Separate type Detector and Related Equipment 2-2
2.2.1 ZR22G General-purpose Separate type Detector 2-2
2.2.2 ZO21R Probe Protector 2-7
2.3 Separate type Detector for High Temperature and Related Equipment 2-8
2.3.1 ZR22G (0.15m) Separate type Detector for High Temperature 2-8
2.3.2 ZO21P High Temperature Probe Adapter 2-9
2.4 AV550G Averaging Converter 2-11
2.4.1 Standard Specifications 2-11
2.4.2 Functions 2-12
2.5 ZA8F Flow Setting Unit 2-18
2.6 Other Equipments 2-20
2.6.1 Dust Filter for the Detector (K9471UA) 2-20
2.6.2 Dust Guard Protector (K9471UC) 2-20
2.6.3 Ejector Assembly for High Temperature (E7046EC, E7046EN) 2-21
2.6.4 Stop Valve (L9852CB, G7016XH) 2-23
2.6.5 Check Valve (K9292DN, K9292DS) 2-23
2.6.6 Air Set 2-24
2.6.7 Zero Gas Cylinder (G7001ZC) 2-25
2.6.8 Cylinder Pressure Reducing Valve (G7013XF, G7014XF) 2-25
2.6.9 Case Assembly for Calibration Gas Cylinder (E7044KF) 2-26
2.6.10 ZR22A Heater Assembly 2-26

3. Installation 3-1

3.1 Installation of General-purpose Detector 3-1

3.1.1 Installation Location 3-1

3.1.2 Probe Insertion Hole 3-1

3.1.3 Installation of the Detector 3-2

3.1.4 Installation of the Dust Filter (K9471UA), Dust Guard Protector (K9471UC), Probe Protector ZO21R 3-3

3.2 Installation of High Temperature Detector (ZR22G-015) 3-5

3.2.1 Installation Location 3-5

3.2.2 Usage of the High Temperature Probe Adapter (ZO21P) 3-5

3.2.3 Probe Insertion Hole 3-6

3.2.4 Mounting of the High Temperature Detector 3-7

3.3 Installation of the Averaging Converter 3-8

3.3.1 Installation Location 3-8

3.3.2 Installation in an Instrument Panel 3-9

3.3.3 Outdoor Installation 3-10

3.4 Installation of ZA8F Flow Setting Unit 3-11

3.4.1 Installation Location 3-11

3.4.2 Mounting of ZA8F Flow Setting Unit 3-11

3.5 Installation of the Case Assembly(E7044KF) 3-12

3.5.1 Installation Location 3-12

3.5.2 Mounting 3-12

4. Piping 4-1

4.1 Piping for a System Using Flow Setting Units for Manual Calibration 4-1

4.1.1 Parts Required for Piping in a System Using Flow Setting Units for Manual Calibration 4-2

4.1.2 Piping for the Calibration Gas Inlet 4-3

4.1.3 Piping for the Reference Gas Inlet 4-3

4.1.4 Piping to the High Temperature Probe Adapter 4-3

4.1.5 Piping for Blow back 4-5

4.1.6 Piping for Indication check 4-6

4.1.7 Piping to Introduce Purge Gas When a Process Gas Alarm Occurs 4-7

4.2 Piping for a System to Perform Automatic Calibration 4-8

4.2.1 Parts Required for Piping in a System to Perform Automatic Calibration 4-10

4.2.2 Piping for the Calibration Gases 4-11

4.2.3 Piping for the Reference Gas 4-11

4.2.4 Piping to the High Temperature Probe Adapter 4-12

4.2.5 Piping for Blow back 4-12

4.2.6 Piping for Indication Check 4-12

4.2.7 Piping to Introduce Purge Gas When a Process Gas Alarm Occurs 4-13

5. Wiring 5-1

5.1 General 5-1

5.1.1 Wiring Precautions 5-1
5.1.2 Wiring Holes 5-3
5.1.3 External Wiring Connection Terminals of the Averaging Converter 5-3
5.1.4 Types of Wiring and Cables 5-4
5.2 Wiring for the Averaging Converter and Peripheral Devices 5-5
5.2.1 Preparation for Wiring to the Averaging Converter 5-5
5.2.2 Preparation for Wiring to Detectors 5-5
5.2.3 Power and Ground Wiring 5-6
5.2.4 Power Wiring to Detector Heaters 5-7
5.2.5 Signal Wiring to Detectors 5-8
5.2.6 Ground Wiring of Detectors 5-9
5.2.7 Wiring for Individual and Average Concentration Analog Outputs 5-9
5.2.8 Wiring for Solenoid Valve for Automatic Calibration 5-10
5.2.9 Wiring for Individual/Common Error Contact Outputs and Functional Contact Outputs 5-11
5.2.10 Wiring for Contact Inputs 5-12
5.3 Wiring and Piping Examples 5-13
5.3.1 Wiring and Piping for Automatic Calibration 5-13
5.3.2 Wiring and Piping for Automatic Calibration and 3rd Gas Indication Check 5-13
5.3.3 Wiring and Piping for Blow back 5-14
5.3.4 Wiring and Piping for Automatic Calibration and Blow back 5-14
6. Components 6-1
6.1 ZR22G Detector 6-1
6.1.1 General-purpose Detector (except for Model ZR22G-015) 6-1
6.1.2 High Temperature Detector (Model ZR22G-015) 6-2
6.2 AV550G Averaging Converter 6-3
6.2.1 Components and Function 6-3
6.2.2 Touchpanel Switch Operations 6-3
6.3 ZA8F Flow Setting Unit 6-12
7. Startup 7-1
7.1 Startup Procedure 7-1
7.2 Check Piping and Wiring 7-1
7.3 Set Valve Type 7-2
7.4 Setting Detector Model 7-2
7.5 Supply Power to Averaging Converter 7-4
7.6 Selection of Gas to be Measured 7-5
7.7 Current Output Range Setting 7-5
7.8 Averaging Group Setting 7-6
7.9 Calibration 7-7
7.9.1 Setting Calibration Gas Concentration 7-7
7.9.2 Performing Manual Calibration 7-8
7.10 Analog Output Current Loop Check 7-10

7.11 Checking Operation of Contact Input, Contact Output 7-11
7.11.1 Contact Output Operation Check 7-11
7.11.2 Checking contacts used to operate solenoid valves during automatic calibration 7-12
7.11.3 Checking Contact Inputs 7-12
8. Setting Operating Parameters - Detail, and Examples 8-1
8.1 Setting Analog Outputs 8-1
8.1.1 Analog Output Range (Per-Channel) 8-1
8.1.2 Setting Output Hold (Applies to All Outputs) 8-3
8.1.3 Setting Output Smoothing Coefficient (Applies to All Analog Outputs) 8-7
8.1.4 Setting Output Mode (Applies to All Analog Outputs) 8-7
8.2 Setting Oxygen Concentration Alarms 8-8
8.2.1 Setting the Alarm Values (Individual Settings) 8-8
8.2.2 Alarm Delay Time and Hysteresis (Applies to All Alarm Settings) 8-8
8.3 Setting Contact Outputs 8-11
8.4 Setting Contact Inputs 8-13
8.5 Other Settings 8-14
8.5.1 Date and Time 8-14
8.5.2 Average Value / Max. and Min. Monitoring Time 8-14
8.5.3 “Fuel” Setup: Humid Exhaust Gas or “Dry” Equivalent Oxygen Content 8-15
8.5.4 Setting Password 8-20
9. Calibration 9-1
9.1 Calibration Briefs 9-1
9.1.1 Principle of Measurement 9-1
9.1.2 Calibration Gas 9-2
9.1.3 Compensation 9-3
9.1.4 Characteristic Data from a Sensor Measured During Calibration 9-4
9.2 Calibration Setup 9-4
9.2.1 Mode 9-4
9.2.2 Calibration Setup Procedure 9-5
9.2.3 Zero Gas Concentration 9-5
9.2.4 Span Gas Concentration 9-6
9.2.5 Calibration Time Setting 9-6
9.3 Performing Calibration 9-9
9.3.1 Performing Manual Calibration 9-9
9.3.2 Semi-Automatic Calibration 9-9
9.3.3 Starting Automatic Calibration 9-10
10. Other Functions 10-1
10.1 Display 10-1
10.1.1 Cell Voltage 10-1
10.1.2 Thermocouple Voltage 10-1
10.1.3 Cold Junction Resistance (C.J. Voltage) 10-2

10.1.4 Cell temperature 10-2
10.1.5 C. J. Temperature 10-2
10.1.6 Span gas and Zero gas Correction Ratios 10-2
10.1.7 Cell Response Time 10-3
10.1.8 Robustness of a Cell 10-3
10.1.9 Cell's Internal Resistance 10-3
10.1.10 Recommended Next Calibration Date 10-4
10.1.11 Heater ON-Time Ratio 10-4
10.1.12 Time 10-4
10.1.13 Ch. card Rev., Ctrl. card Rev. 10-4
10.1.14 Maximum Oxygen Concentration 10-5
10.1.15 Minimum Oxygen Concentration 10-5
10.1.16 Average Oxygen Concentration 10-5
10.1.17 History of Calibration Time 10-5
10.1.18 Internal Temperature Alarm Logging 10-5
10.2 Trend Graphs 10-6
10.2.1 Trend Graph Screen 10-6
10.2.2 Time Axis of Trend Graph 10-7
10.2.3 Trend Graph Display Settings 10-7
10.3 Other Display-related Functions 10-9
10.3.1 Auto-return Time 10-9
10.3.2 Selecting Language 10-9
10.3.3 LCD Auto Off 10-10
10.3.4 Display Contrast Adjustment 10-10
10.3.5 Tag Name Entry 10-10
10.4 Indication Check 10-11
10.4.1 Mode 10-11
10.4.2 Procedure for Performing an Indication Check 10-12
10.4.3 Setting Contacts for Operating Third Check Gas Solenoid Valve 10-12
10.4.4 Setting Indication Check Timing 10-13
10.4.5 Running an Indication Check 10-15
10.5 Blow back 10-19
10.5.1 Mode 10-19
10.5.2 Setting Contacts for Operating Solenoid Valves 10-20
10.5.3 Setting Blow back Start Time 10-21
10.5.4 Operation of Blow back 10-22
10.5.5 Performing Blow back 10-23
10.6 Purging 10-24
10.7 Parameter Initialization 10-26
10.8 Methods of Operating Valves in the ZA8F Flow Setting Unit 10-29
10.8.1 Preparation Before Calibration 10-29
10.8.2 Operating the Span Gas Flow Setting Valve 10-29

10.8.3 Operating the Zero Gas Flow Setting Valve 10-30
10.8.4 Operation After Calibration 10-30
11. Inspection and Maintenance 11-1
11.1 Removing and Attaching the Front Cover 11-2
11.1.1 Removing the Front Cover 11-2
11.1.2 Attaching the Front Cover 11-2
11.2 Hot Swap Function 11-2
11.3 Inspection and Maintenance of the Detector 11-4
11.3.1 Cleaning the Filter in Sensor Assembly 11-4
11.3.2 Cleaning the Calibration Gas Tube 11-4
11.3.3 Replacing the Sensor Assembly 11-4
11.3.4 Replacement of the Heater Unit 11-7
11.3.5 Replacement of Dust Filter 11-9
11.3.6 Replacement of O-ring 11-10
11.3.7 Cleaning the High Temperature Probe Adapter 11-10
11.3.8 Stopping and Re-starting Operation 11-11
11.4 Inspection and Maintenance of the Averaging Converter 11-12
11.4.1 Fuse Replacement 11-12
11.4.2 Cleaning 11-13
11.5 Adding Channel Cards 11-14
11.6 Adding the Expansion Power Supply Unit 11-15
11.7 Replacing Limited Life Components 11-16
12. Troubleshooting 12-1
12.1 Displays and Remedies When Errors Occur 12-1
12.1.1 Error Types 12-1
12.1.2 Operations When an Error Occurs 12-1
12.1.3 Error Displays 12-2
12.1.4 Remedies When an Error Occurs 12-3
12.2 Displays and Remedies When Alarms are Generated 12-6
12.2.1 Alarm Types 12-6
12.2.2 Alarm Displays 12-7
12.2.3 Remedies when Alarms are Generated 12-7
12.3 Countermeasures When Measured Value Shows Error 12-14
12.3.1 Measured Value Higher Than True Value 12-14
12.3.2 Measured Value Lower Than True Value 12-15
12.3.3 Measurements Sometimes Show Abnormal Values 12-15
Customer Maintenance Parts List ..... CMPL 11M12D01-01E
Customer Maintenance Parts List ..... CMPL 11M12A01-02E
Customer Maintenance Parts List ..... CMPL 11M06B02-01E
Customer Maintenance Parts List ..... CMPL 11M03B01-10E
Customer Maintenance Parts List ..... CMPL 11M03B01-05E
Revision Information i

1. Overview

Zirconia oxygen analyzers are used in combustion facilities to measure the flue gas oxygen concentration. Boiler operators use the oxygen measurement to optimize fuel usage, minimize atmospheric emissions and reduce energy consumption.

A multiple point oxygen measurement system may be required for situations when gas stratification in the flue duct affects combustion control. The AV550G Averaging Converter can accept inputs from up to eight zirconia oxygen detectors. It sends output signals for the individual as well as averages of multiple oxygen concentrations. A robust multipoint converter reduces installation and maintenance costs.

A large 5.7-inch color LCD display shows various measurement, setup, calibration, and trend screens. Its intuitive touch screen is easy to read and makes set up and maintenance simple. Other standard features include new self-diagnostics and a hot swap function that allows a desired probe to be disconnected/reconnected for inspection or maintenance just by turning off the power of the relevant channel.

The ZR22G separate type detector uses a highly reliable zirconia sensor and its heater assembly can be replaced in the field. The in situ probe is mounted on the duct wall and directly measures the oxygen concentration of a sample gas at a temperature of up to 700°C. For higher temperature applications up to 1400°C, the ZO21P High Temperature Probe Adapter is available for use in conjunction with a 0.15 m ZR22G general-purpose detector.
The averaging converter system is ideal for combustion control in large utility boilers or various industrial furnaces.

This chapter explains system configurations with some typical examples.

1.1 System Configuration

The AV550G Zirconia Oxygen Analyzer Averaging Converter system can be configured by selecting detectors and an averaging converter that meet the individual requirements and flow setting units for calibration.

Subsection 1.1.1 presents a typical system configuration using flow setting units for manual calibration. A typical system configuration to perform automatic calibration is provided in Subsection 1.1.2.

1.1.1 System Configuration Using Flow Setting Units for Manual Calibration

This system consists of detectors, an averaging converter, and flow setting units (Model ZA8F), as shown in Figure 1.1. Note that the ZA8F Flow Setting Units are required as many as the detectors connected to the averaging converter.

A reference gas needs to be supplied at a constant flow rate to the detectors. This reference gas must be clean, dry air having a constant percentage of oxygen. Typically, instrument air that has been dehumidified down to a dew point of approximately -20°C and is free from oil mist or dust, is used as the air source. This air is also used as a span gas for the detectors during calibration. A zero gas for calibration is supplied from a cylinder to the detectors.

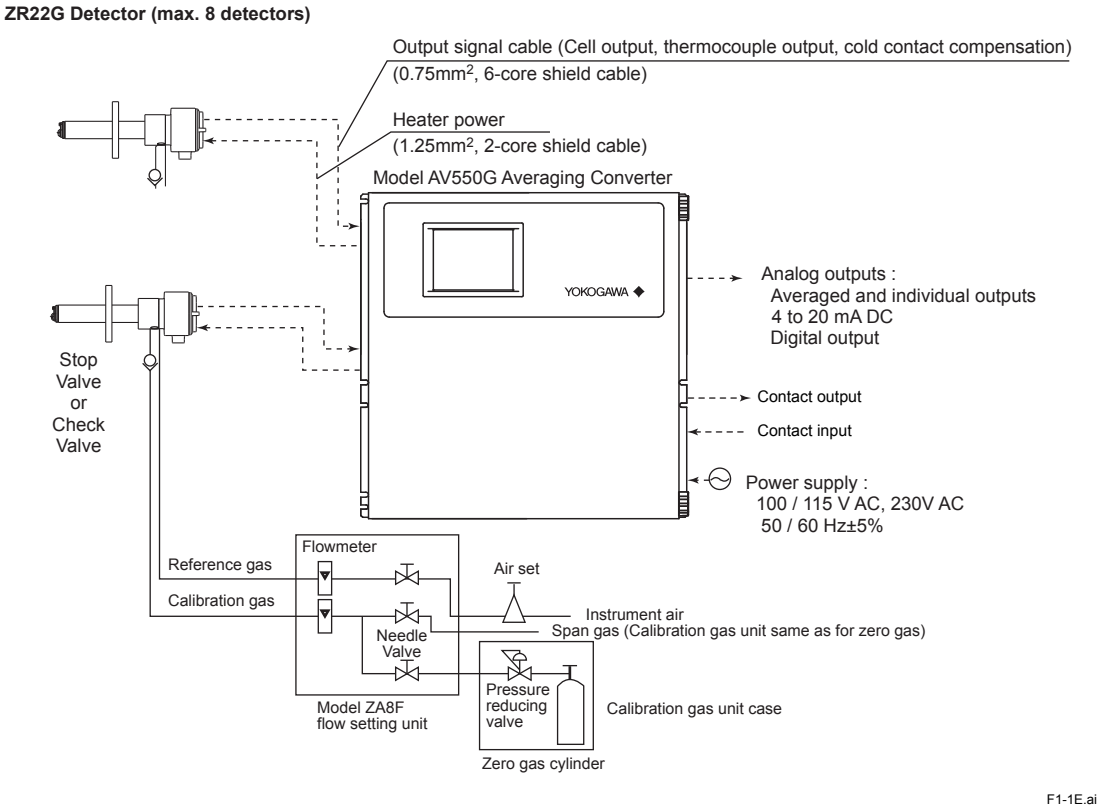

Figure 1.1 Typical System Configuration Using Flow Setting Units for Manual Calibration

1.1.2 System Configuration to Perform Automatic Calibration

A typical system configuration to perform automatic calibration is illustrated in Figure 1.2. The system consists of detectors, an averaging converter, solenoid valves, needle valves for flow control, and a float-type flowmeter.

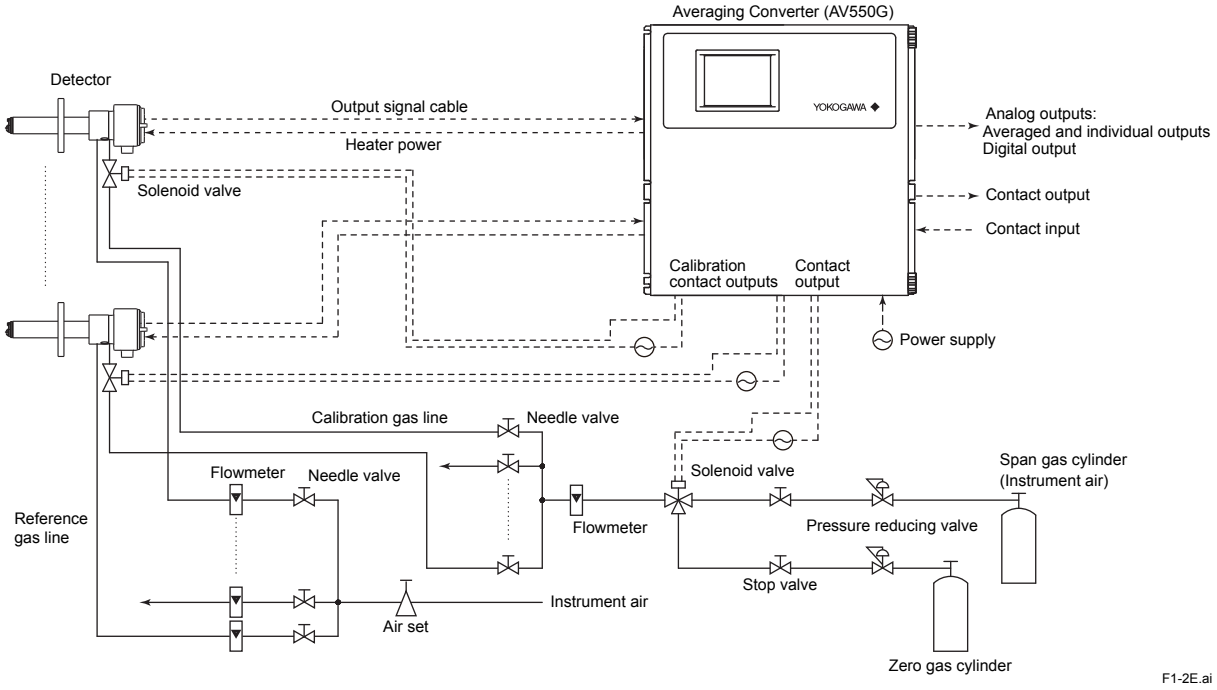

Figure 1.2 Typical System Configuration to Perform Automatic Calibration

1.2 System Components

1.2.1 System Components and Their Applicability

Item	Model, Part Number or Specifications	System 1 Manual Calibration	System 2 Automatic Calibration
Averaging Converter	AV550G-□ (A or B)	○	○
Detector	See Chapter 1.2.2	○	○
Flow setting unit	ZA8F	○	
Needle valve	For flow control		○
Flowmeter	0 to 1 L/min		○
Solenoid valve	E7057GS, E7057GT, E7057GR, G7001XP, G7002XP, G7003XP		○
Solenoid valve for zero/span switching	Solenoid valve for switching two streams		○
Stop valve	L9852CB, G7016XH	(○)	○
Check valve	K9292DN, K9292DS	(○)	
Air set	G7003XF, K9473XK, G7004XF, K9473XG	○	○
Pressure reducing valve for zero gas cylinder	G7013XF, G7014XF	○	○
Zero gas cylinder	G7001ZC	○	○

○ : Items required for the above system example
(○) : Select either

1.2.2 Detectors and Accessories

<table>
<tr><th colspan="2">Item / Temp.</th><th colspan="2">Process gas temperature 0 to 700°C</th><th colspan="2">Process gas temperature 700 to 1400°C</th></tr>
<tr><th>Mounting</th><th>Insertion length</th><th>General-purpose detector</th><th>Application</th><th>High temperature detector</th><th>Application</th></tr>
<tr><td>Horizontal to vertical</td><td>0.4 to 2 m</td><td rowspan="2"> 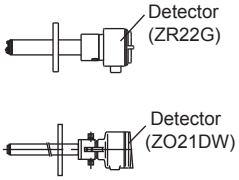
</td><td rowspan="2">• Boiler
• Heating furnace</td><td rowspan="3"> 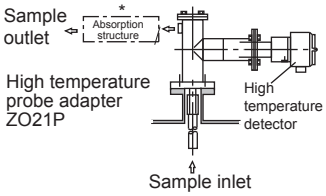

Probe material and Temperature
SUS310S: 800°C, SiC: 1400°C
Mounting: Vertical downwards
Insertion length: 0.5, 0.6, 0.7, 0.8, 0.9, 1.0, 1.5m
When duct pressure is atmospheric or negative, attach ejector assembly.
* Ejector assembly for high temperature (E7046EC, E7046EN)</td><td rowspan="3">• Heating furnace</td></tr>
<tr><td>Vertical</td><td>2.5 m or more</td></tr>
<tr><td>Horizontal to vertical</td><td>3 m or less</td><td> 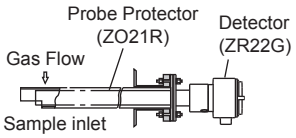
</td><td>• For pulverized coal boiler with gas flow velocity 10 m/sec or more</td></tr>
<tr><td>Horizontal to vertical</td><td>0.4 to 2 m</td><td rowspan="2"> 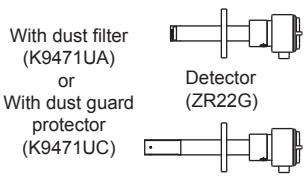
</td><td rowspan="2">• Black liquid recovery boiler
• Cement Kiln</td><td> 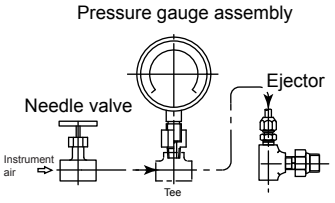
</td></tr>
<tr><td>Vertical</td><td>2.5 m or more</td><td></td></tr>
</table>

F1-3E.ai

Blank Page

2. Specifications

This chapter describes the specifications for the following:

ZR22G	General-purpose separate type detector (See Subsection 2.2.1)
ZO21R	Probe protector (See Subsection 2.2.2)
ZR22G (0.15 m)	Separate type detector for high temperature (See Subsection 2.3.1)
ZO21P	High temperature probe adapter (See Subsection 2.3.2)
AV550G	Averaging converter (See Section 2.4)
ZA8F	Flow setting unit (See Subsection 2.5.1)
–	Other equipment (See Section 2.6)

2.1 General Specifications

Standard Specifications

Measured Object: Oxygen concentration in combustion exhaust gas and mixed gas (excluding inflammable gases, may not be applicable corrosive gas such as ammonia is present — check with Yokogawa)

Measurement System: Zirconia system

Oxygen concentration: 0.01 to 100 vol% O_2

Output Signal: 4 to 20 mA DC (maximum load resistance 550 Ω)

Measurement Range: Any setting in the range of 0 to 5 through 0 to 100 vol% O_2 (in 1 vol% O_2), or partial range

Digital Communication (HART): 250 to 550 Ω, depending on number of field devices connected to the loop (multi-drop mode).
Note: HART is a registered trademark of the HART Communication Foundation.

Display Range: 0 to 100 vol% O_2

Warm-up Time: Approx. 20 min.

Repeatability: (Excluding the case where the reference gas is by natural convection)
±0.5% Maximum value of set range;
0 to 5 vol% O_2 or more and less than 0 to 25 vol% O_2 range
±1% Maximum value of set range;
0 to 25 vol% O_2 or more and up to 0 to 100 vol% O_2 range

Linearity: (Excluding standard gas tolerance)
(Excluding the case where the reference gas is by natural convection)
(Use oxygen of known concentration (within the measuring range) as the zero and span calibration gases.)

±1% Maximum value of set range ;
0 to 5 vol% O_2 or more and less than 0 to 25 vol% O_2 range
(Sample gas pressure: within ±4.9 kPa)
±3% Maximum value of set range ;
0 to 25 vol% O_2 or more and less than 0 to 50 vol% O_2 range
(Sample gas pressure: within ±0.49 kPa)

±5% Maximum value of set range ;
0 to 50 vol% O_2 or more and up to 0 to 100 vol% O_2 range
(Sample gas pressure: within ±0.49 kPa)

Drift: (Excluding the first two weeks in use)
(Excluding the case where the reference gas is by natural convection.)
Both zero and span ±2% Maximum value of set range/month

Response Time : Response of 90% within 5 seconds. (Measured after gas is introduced from calibration gas inlet and analog output start changing.)

2.2 General-purpose Separate type Detector and Related Equipment

General-purpose separate type detector ZR22G can be used in combination with the probe protector ZO21R (see Subsection 2.2.2).

2.2.1 ZR22G General-purpose Separate type Detector

Sample Gas Temperature:0 to 700 °C (Probe only)

It is necessary to mount the cell using Inconel cell-bolts when the temperature is greater than 600 °C.
700 to 1400 °C (with High Temperature Probe Adapter)
For high temperature sample gas, apply 0.15 m long probe and High Temperature Probe Adapter ZO21P.

Sample Gas Pressure: -5 to +250 kPa (When the pressure in the furnace exceeds 3 kPa, it is recommended that you compensate the pressure. When the pressure in the furnace exceeds 5 kPa, you must perform pressure compensation.) For 0.15 m probe, 0.5 to 5 kPa. No pressure fluctuation in the furnace should be allowed.

Note: When the detector is used in conjunction with a check valve and a ZA8F Flow Setting Unit, the maximum pressure of sample gas is 150 kPa. When with a check valve and a ZR40H Automatic Calibration Unit, it is 200 kPa. If the pressure of your sample gas exceeds these limits, consult with Yokogawa.

Probe Length: 0.15, 0.4, 0.7, 1.0, 1.5, 2.0, 2.5, 3.0, 3.6, 4.2, 4.8, 5.4 m

Probe Material: SUS 316 (JIS)

Ambient Temperature: -20 to +150 °C

Reference Gas System: Natural Convection, Instrument Air, Pressure Compensation (other than for probe length 0.15 m)

Instrument Air System (excluding Natural Convection) :
Pressure; 200 kPa + the pressure inside the furnace (It is recommended to use air which has been dehumidified by cooling to dew point -20 °C or less, and dust or oil mist removed.)
Consumption; Approx. 1 Nl/min

Material in Contact with Gas: SUS 316 (JIS), Zirconia, SUS 304 (JIS) (flange), Hastelloy B, (Inconel 600, 601)

Construction: Heater and thermocouple replaceable construction.
Non-explosion-proof JIS C0920 / equivalent to IP44D.
Equivalent to NEMA 4X/IP66 (Achieved when the cable entry is completely sealed with a cable gland in the recirculation pressure compensated version.)

Terminal Box Case: Material; Aluminum alloy

Terminal Box Paint Color: Case; Mint green (Munsell 5.6BG3.3/2.9)
Cover; Mint green (Munsell 5.6BG3.3/2.9)

Finish: Polyurethane corrosion-resistant coating

Gas Connection: Rc1/4 or 1/4 FNPT

Wiring Connection: G1/2, Pg13.5, M20 by 1.5 mm, 1/2 NPT

Installation: Flange mounting

Probe Mounting Angle: Horizontal to vertically downward.
When the probe insertion length is 2 m or less, installing at angles from horizontal to vertically downward is available.
When the probe insertion length is exceeds 2.5 m, mount vertically downward (within ±5°), and use a probe protector.

Weight: Insertion length; 0.4 m: approx. 6 kg (JIS 5K 65) / approx. 11 kg (ANSI 150 4)
1.0 m: approx. 8 kg (JIS 5K 65) / approx. 13 kg (ANSI 150 4)
1.5 m: approx. 10 kg (JIS 5K 65) / approx. 15 kg (ANSI 150 4)
2.0 m: approx. 12 kg (JIS 5K 65) / approx. 17 kg (ANSI 150 4)
3.0 m: approx. 15 kg (JIS 5K 65) / approx. 20 kg (ANSI 150 4)
3.6 m: approx. 17 kg (JIS 5K 65) / approx. 22 kg (ANSI 150 4)
4.2 m: approx. 19 kg (JIS 5K 65) / approx. 24 kg (ANSI 150 4)
4.8 m: approx. 21 kg (JIS 5K 65) / approx. 26 kg (ANSI 150 4)
5.4 m: approx. 23 kg (JIS 5K 65) / approx. 28 kg (ANSI 150 4)

Model and Codes

Style : S2

Model	Suffix code	Option code	Description
ZR22G	----------	----------	Separate type Zirconia Oxygen Analyzer, Detector
Length	-015	----------	0.15 m (for high temperature use) (*1)
	-040	----------	0.4 m
	-070	----------	0.7 m
	-100	----------	1.0 m
	-150	----------	1.5 m
	-200	----------	2.0 m
	-250	----------	2.5 m (*2)
	-300	----------	3.0 m (*2)
	-360	----------	3.6 m (*2)
	-420	----------	4.2 m (*2)
	-480	----------	4.8 m (*2)
	-540	----------	5.4 m (*2)
Wetted material	-S	----------	SUS316
	-C	----------	Stainless steel with Inconel calibration gas tube (*9)
Flange (*3)	-A	----------	ANSI Class 150 2 RF SUS304
	-B	----------	ANSI Class 150 3 RF SUS304
	-C	----------	ANSI Class 150 4 RF SUS304
	-E	----------	DIN PN10 DN50 A SUS304
	-F	----------	DIN PN10 DN80 A SUS304
	-G	----------	DIN PN10 DN100 A SUS304
	-K	----------	JIS 5K 65 FF SUS304
	-L	----------	JIS 10K 65 FF SUS304
	-M	----------	JIS 10K 80 FF SUS304
	-P	----------	JIS 10K 100 FF SUS304
	-Q	----------	JIS 5K 32 FF SUS304 (for high temperature use) (*4)
	-R	----------	JPI Class 150 4 RF SUS304
	-S	----------	JPI Class 150 3 RF SUS304
	-W	----------	Westinghouse
Reference gas	-C	----------	Natural convection
	-E	----------	External connection (Instrument air) (*10)
	-P	----------	Pressure compensated (*10)
Gas Thread	-R	----------	Rc 1/4
	-T	----------	1/4 NPT(Female)
Connection box thread	-P	----------	G1/2
	-G	----------	Pg13.5
	-M	----------	M20 x1.5 mm
	-T	----------	1/2 NPT
	-Q	----------	Quick connect (*8)
Instruction manual	-J	----------	Japanese
	-E	----------	English
	-C	----------	Chinese
—	-A	----------	Always -A
Options		/C	Inconel bolt (*5)
	Valves	/CV	Check valve (*6)
		/SV	Stop valve (*6)
	Filter	/F1	Dust Filter
		/F2	Dust Guard Protector
	Tag plates	/SCT	Stainless steel tag plate (*7)
		/PT	Printed tag plate (*7)

*1 Used with the ZO21P High Temperature Probe Adapter. Select flange (-Q).
*2 When installing horizontally the probe whose insertion length is 2.5 meters or more, use the Probe Protector. Be sure to specify ZO21R-L-200-☐. Specify the flange suffix code either -C or -K.
*3 The thickness of the flange depends on its dimensions.
*4 Not used in conjunction with -P (pressure compensation) for reference gas. The flange thickness does not conform to JIS specification
*5 Inconel probe bolts and U shape pipe are used. Use this option for high temperature use (ranging from 600 to 700°C).
*6 Specify either /CV or /SV option code.
*7 Specify either /SCT or /PT option code.
*8 Not waterproof, avoid rain. Operating maximum temperature is 80°C. Available only in the U.S.
*9 Recommended if sample gas contains corrosive gas like chlorine.
*10 Piping for reference gas must be installed to supply reference gas constantly at a specified flow rate.

EXTERNAL DIMENSIONS

1. Model ZR22G Separate type Zirconia Oxygen Analyzer, Detectors

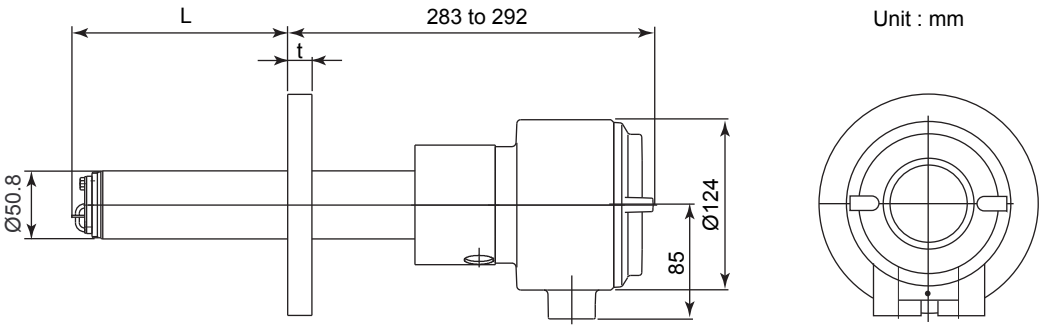

L=0.15, 0.4, 0.7, 1.0, 1.5, 2.0, 2.5, 3.0,
3.6, 4.2, 4.8, 5.4 (m)

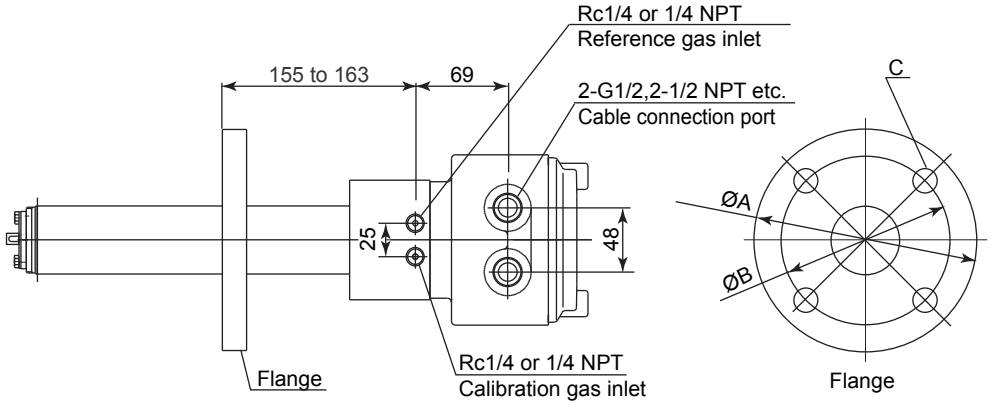

Flange	A	B	C	t
ANSI Class 150 2 RF SUS304	152.4	120.6	4 - Ø19	19
ANSI Class 150 3 RF SUS304	190.5	152.4	4 - Ø19	24
ANSI Class 150 4 RF SUS304	228.6	190.5	8 - Ø19	24
DIN PN10 DN50 A SUS304	165	125	4 - Ø18	18
DIN PN10 DN80 A SUS304	200	160	8 - Ø18	20
DIN PN10 DN100 A SUS304	220	180	8 - Ø18	20
JIS 5K 65 FF SUS304	155	130	4 - Ø15	14
JIS 10K 65 FF SUS304	175	140	4 - Ø19	18
JIS 10K 80 FF SUS304	185	150	8 - Ø19	18
JPI Class 150 3 RF SUS304	210	175	8 - Ø19	18
Westinghouse	115	90	4 - Ø15	5
JIS 10K 100 FF SUS304	229	190.5	8 - Ø19	24
JIS 5K 32 FF SUS304	190	152.4	4 - Ø19	24
JPI Class 150 4 RF SUS304	155	127	4 - Ø11.5	14

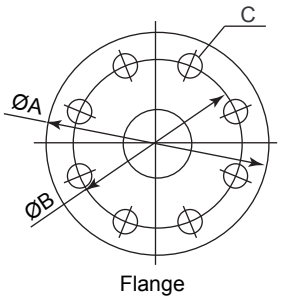

F2-1E.ai

2. Model ZR22G...-P (with pressure compensation) Separate type Zirconia Oxygen Analyzer, Detectors

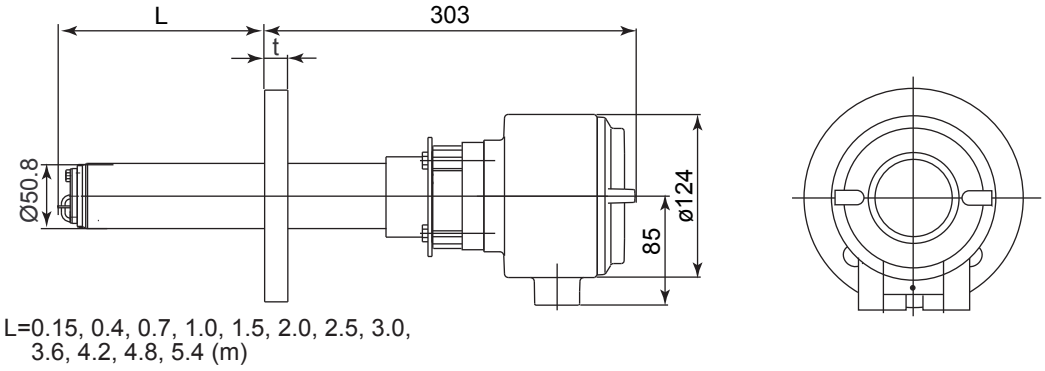

L=0.15, 0.4, 0.7, 1.0, 1.5, 2.0, 2.5, 3.0, 3.6, 4.2, 4.8, 5.4 (m)

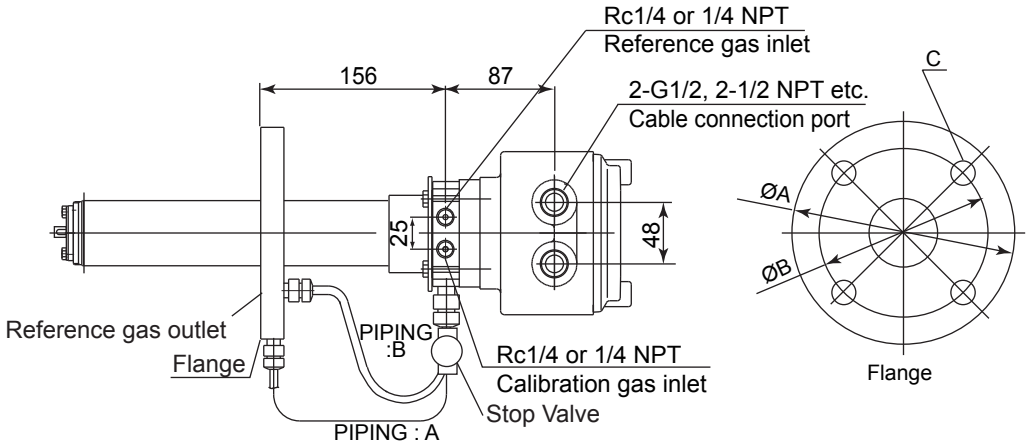

Flange	A	B	C	t	PIPING
ANSI Class 150 2 RF SUS304	152.4	120.6	4 - Ø19	19	A
ANSI Class 150 3 RF SUS304	190.5	152.4	4 - Ø19	24	B
ANSI Class 150 4 RF SUS304	228.6	190.5	8 - Ø19	24	B
DIN PN10 DN50 A SUS304	165	125	4 - Ø18	18	A
DIN PN10 DN80 A SUS304	200	160	8 - Ø18	20	B
DIN PN10 DN100 A SUS304	220	180	8 - Ø18	20	B
JIS 5K 65 FF SUS304	155	130	4 - Ø15	14	A
JIS 10K 65 FF SUS304	175	140	4 - Ø19	18	A
JIS 10K 80 FF SUS304	185	150	8 - Ø19	18	B
JIS 10K 100 FF SUS304	210	175	8 - Ø19	18	B
JPI Class 150 4 RF SUS304	229	190.5	8 - Ø19	24	B
JPI Class 150 3 RF SUS304	190	152.4	4 - Ø19	24	B
Westinghouse	155	127	4 - Ø11.5	14	A

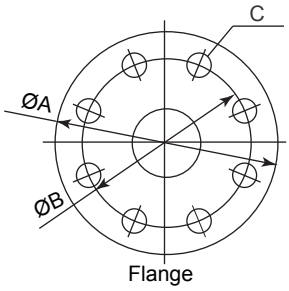

F2-2E.ai

2.2.2 ZO21R Probe Protector

Used when sample gas flow velocity is approx. 10 m/sec or more and dust particles wears the detector in cases such as pulverized coal boiler of fluidized bed furnace (or burner) to protect the detector from wearing by dust particles. When probe insertion length is 2.5 m or more and horizontal installation, specify the ZO21R-L-200-☐*B to reinforce the probe.

Insertion Length: 1.05, 1.55, 2.05 m.

Flange: JIS 5K 65A FF equivalent. ANSI Class 150 4 FF (without serration) equivalent or DIN PN10 DN50A equivalent. However, flange thickness is different.

Material: SUS316 (JIS), SUS304 (JIS) (Flange)

Weight: 1.05 m; Approx. 6/10/8.5 kg (JIS/ANSI/DIN),
1.55 m; Approx. 9/13/11.5 kg (JIS/ANSI/DIN),
2.05 m; Approx. 12/16/14.5 kg (JIS/ANSI/DIN)

Installation: Bolts, nuts, and washers are provided for detector, probe protector and process-side flange.

Model and Codes

Model	Suffix code	Option code	Description
ZO21R	-L	----------	Probe Protector(0 to 700°C)
Insertion length	-100	----------	1.05 m (3.5 ft)
	-150	----------	1.55 m (5.1 ft)
	-200	----------	2.05 m (6.8 ft)
Flange (*1)	-J	----------	JIS 5K 65 FF SUS304
	-A	----------	ANSI Class 150 4 FF SUS304
	-E	----------	DIN PN10 DN50A
Style code	*B	----------	Style B

*1 Thickness of flange depends on dimensions of flange.

Unit: mm

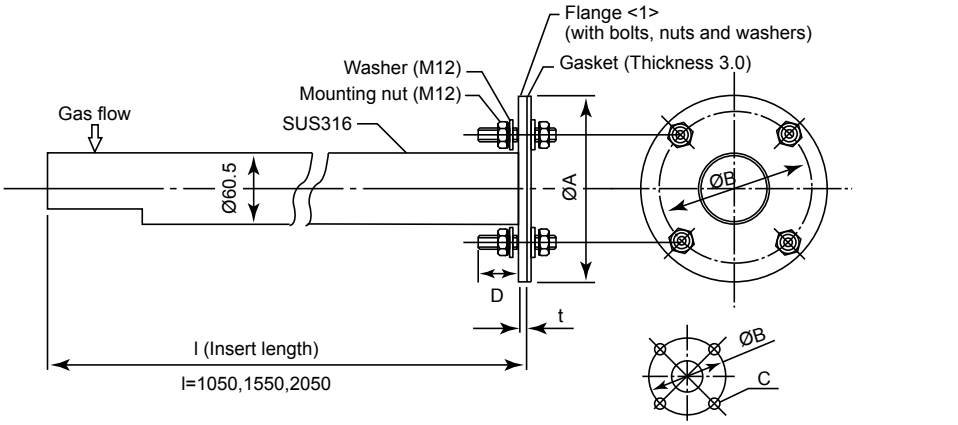

Flange<1>	A	B	C	t	D
JIS 5K 65 FF SUS304	155	130	4 - Ø15	5	40
ANSI Class 150 4 FF SUS304	228.6	190.5	8 - Ø19	12	50
DIN PN10 DN50A SUS304	165	125	4 - Ø18	12	50

2.3 Separate type Detector for High Temperature and Related Equipment

2.3.1 ZR22G (0.15m) Separate type Detector for High Temperature

Standard Specifications

Construction: Water-resistant, non-explosion-proof

Probe length: 0.15 m

Terminal box: Aluminum alloy

Probe material in contact with gas: SUS 316 (JIS) (Probe), SUS 304 (JIS) (Flange), Zirconia (Sensor), Hastelloy B, (Inconel 600, 601)

Weight: Approx. 3 kg

Installation: Flange mounting (The use of detector for high temperature, the ZO21P high temperature probe adapter is necessary.)

Flange standard: JIS 5 K 32 FF equivalent (thickness varies)

Mounting angle: Any angle between horizontal and vertical (high temperature probe is fitted with an adapter)

Reference gas and calibration gas piping connection: Rc 1/4 or 1/4 FNPT

Cable inlet: G 1/2, Pg 13.5, M20 x 15, 1/2 FNPT

Ambient temperature: -20 to 150°C

Sample gas temperature: 0 to 700°C (temperature at the measuring point of the sampling gas)
When sample gas is 700°C to 1400°C, the high temperature probe adapter is used.
Temperature of the high temperature probe adapter shall not exceed 300°C to protect the gasket and avoid the bolts seizing together.

Sample gas pressure: -0.5 to +5 kPa: when used at the range of more than 0 to 25 vol% O_2,
-0.5 to +0.5 kPa. (An ejector assembly is required for negative pressure application.)

Model and Code: Refer to “Model and Codes” in page 2-4.

External Dimensions: Refer to the Figure in page 2-5.

2.3.2 ZO21P High Temperature Probe Adapter

Measuring O_2 in the high temperature gases (exceeds 700°C) requires a general-purpose detector ZR22G of 0.15 m length and a high temperature probe adapter.

Sample gas temperature: 0 to 1400°C (when using SiC probe)
0 to 800°C (when using SUS 310S probe)

Sample gas pressure: -0.5 to + 5 kPa. When using in the range of 0 to 25 vol% O_2 or more, the sample gas pressure should be in the range of -0.5 to +0.5 kPa. (Where the sample gas pressure for the high temperature probe is negative, an auxiliary ejector assembly is necessary.)

Insertion length: 0.5, 0.6, 0.7, 0.8, 0.9, 1.0, 1.5 m

Material in Contact with Gas: SUS 316 (JIS), SiC or SUS 310S, SUS 304 (JIS) (flange)

Probe Material: SiC, SUS 310S (JIS)

Installation: Flange mounting (FF type or RF type)

Probe Mounting Angle: Vertically downward within ± 5°. Where the probe material is SUS 310S, horizontal mounting is available.

Construction: Non-explosion-proof. Rainproof construction

Weight(example): Insertion length of 1.0 m: approx. 5.3 kg (JIS) / approx. 11.3 kg (ANSI)
Insertion length of 1.5 m: approx. 5.8 kg (JIS) / approx. 11.8 kg (ANSI)

Model and Codes

Model	Suffix code	Option code	Description
ZO21P	-H	- - - - - - -	High Temperature Probe Adapter
Material	-A	- - - - - - -	SiC
	-B	- - - - - - -	SUS 310S
Insertion length	-050	- - - - - -	0.5 m
	-060	- - - - - -	0.6 m
	-070	- - - - - -	0.7 m
	-080	- - - - - -	0.8 m
	-090	- - - - - -	0.9 m
	-100	- - - - - -	1.0 m
	-150	- - - - - -	1.5 m
Flange	-J	- - - - - - -	JIS 5K 50 FF SUS304
	-N	- - - - - - -	JIS 10K 65 FF SUS304
	-M	- - - - - - -	JIS 10K 80 FF SUS304
	-L	- - - - - - -	JIS 10K 100 FF SUS304
	-A	- - - - - - -	ANSI Class 150 4 RF SUS304
	-R	- - - - - - -	ANSI Class 150 2 1/2 RF SUS304
	-Q	- - - - - - -	ANSI Class 150 3 RF SUS304
	-T	- - - - - - -	JPI Class 150 3 RF SUS304
	-S	- - - - - - -	JPI Class 150 4 RF SUS304
	-E	- - - - - - -	DIN PN10 DN50 A SUS304
Style code	*B	- - - - - - -	Style B
Option		/EJ1	Ejector Assy with E7046EC
		/EJ2	Ejector Assy with E7046EN
		/SCT	Stainless steel tag plate

Note:The Insertion length 0.15 m of the ZR22G should be specified.

Unit: mm

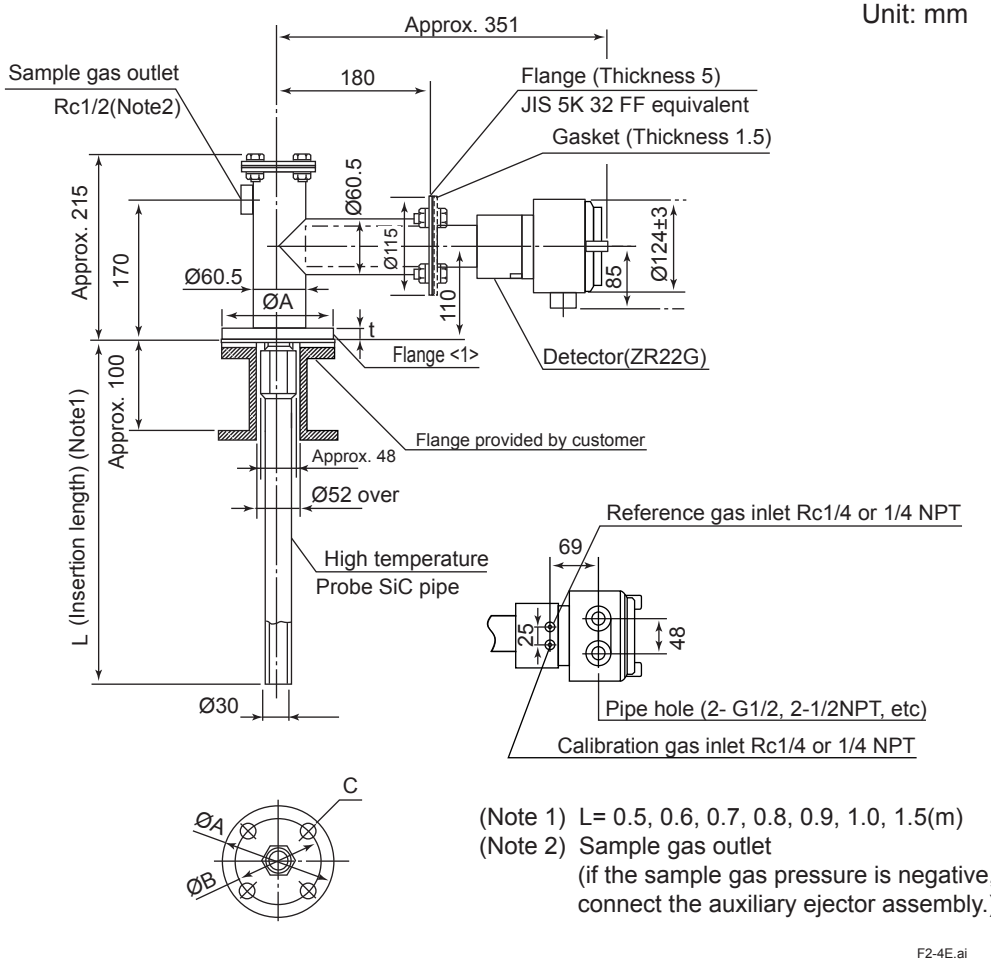

(Note 1) L= 0.5, 0.6, 0.7, 0.8, 0.9, 1.0, 1.5(m)
(Note 2) Sample gas outlet
(if the sample gas pressure is negative, connect the auxiliary ejector assembly.)

F2-4E.ai

Flange<1>	A	B	C	t
JIS 5K 50 FF SUS304	155	130	4 - Ø15	14
JIS 10K 65 FF SUS304	175	140	4 - Ø19	18
JIS 10K 80 FF SUS304	185	150	8 - Ø19	18
JIS 10K 100 FF SUS304	210	175	8 - Ø19	18
ANSI Class 150 4 RF SUS304	228.6	190.5	8 - Ø19	24
ANSI Class 150 3 RF SUS304	190.5	152.4	4 - Ø19	24
ANSI Class 150 2 RF SUS304	152.4	120.6	4 - Ø19	19
JPI Class 150 4 RF SUS304	229	190.5	8 - Ø19	24
JPI Class 150 3 RF SUS304	190	152.4	4 - Ø19	24
DIN PN10 DN50A SUS304	165	125	4 - Ø18	18

2.4 AV550G Averaging Converter

2.4.1 Standard Specifications

Compatibility of Detectors : ZR22G, ZO21D, ZO21DW

Number of Detectors : 1 to 8 (100 V type), Expandable up to 8
1 to 4 (200 V type), Expandable up to 4
(Note) Specify 4 Channel Base when 200V type is selected.

Averaging interval : 0.2 seconds

Display: 5.7 inches color LCD display of size 320 by 240 dot with touch screen

Output Signal: 4 to 20 mA DC (maximum load resistance 550 Ω)

Average-value Output; 3 points
(Note) When the individual insulation is specified, three points of average-value output and individual output are insulated, but, between the three points of average-value are not insulated.

Independent Output; Output to each channel
Common isolation / Individual isolation selectable.

Digital Communication: HART; 250 to 550 Ω, depending on number of field devices connected to the loop (multi-drop mode).
(Note) HART is a registered trademark of the HART Communication Foundation.

Contact Output: Contact capacity 30V DC 3A, 250V AC 3A (resistive load)
Normally open / normally closed selectable

Common Contact Output; 5 points, Four of the output points can be selected to either normally energized or normally deenergized status.
Contact output 5 is normally energized.

Contact Output for Individual Channel Fail; Output to each channel, Normally energized.

Solenoid Valve Contact Output: Contact capacity 30V DC 1A, 250V AC 1A, voltage free contacts, DC 24V power supply (option). Maximam DC 300 mA

Contact Input: 2 points, voltage free contacts

Ambient Temperature: -5 to +50°C

Storage Temperature: -20 to +70°C

Humidity Range: 10 to 85%RH (non-condensing)

Installation Altitude: 2000 m or less

Category based on IEC 61010-1: II (Note)

Pollution degree based on IEC 61010-1:2 (Note)

Note: Installation category, called over-voltage category, specifies impulse withstand voltage. Category II is for electrical equipment.
Pollution degree indicates the degree of existence of solid, liquid, gas or other inclusions which may reduce dielectric strength. Degree 2 is the normal indoor environment.

Power Supply Voltage: Ratings; 100 / 115 V AC, 230 V AC
Acceptable range; 85 to 126.5 V AC, 195.5 to 253 V AC

Power Supply Frequency: Rating; 50/60 Hz
Acceptable range; 50 Hz±5%, 60 Hz±5%

Power Consumption: Max. 40 W + (120 W)×(Number of detectors) for steady operation (100 V type)
Max. 40 W + (220 W)×(Number of detectors) for warm-up (100 V type)
Max. 40 W + (140 W)×(Number of detectors) for steady operation (200 V type)
Max. 40 W + (220 W)×(Number of detectors) for warm-up (200 V type)

Safety and EMC conforming standards (AV550G does not conform to CE marking.)

Safety Standards:

EN	EN61010-1
CSA	CAN/CSA-C22.2 No.61010-1
	CAN/CSA-C22.2 No. 61010-2-030
UL	UL Std. No. 61010-1
	UL std. No. 61010-2-030
GB	GB 30439 Part1

EMC Standards:

EN	EN 61326-1 Class A Table 2
	EN 61326-2-3
	EN 61000-3-2
	EN 61000-3-3
RCM	EN61326-1 Class A Table 2
KC	Korea Electromagnetic Conformity Standard
	한국 전자파적합성 기준

RoHS Standards: EN IEC 63000

CAUTION

This instrument is a Class A product, and it is designed for use in the industrial environment. Please use this instrument in the industrial environment only.

Maximum Distance between Probe and Converter: Conductor two-way resistance must be 10 Ω or less (when a 1.25 mm^2 cable or equivalent is used, 300 m or less)

Construction: Indoor installation

Wiring Connection: Number of wire holes 30 pieces

Wire hole size: Ø17 mm for grommet, Ø6 to Ø12 mm for cable gland (option).

Installation: Wall mounting

Case: Aluminum alloy (100 V type), Steel plate and Aluminum alloy (200 V type)

Paint Color: Silver Gray (Munsell 3.2PB7.4/1.2)

Finish: Polyurethane corrosion-resistance coating

Weight: Approx. 13 kg (100 V type), Approx. 25 kg (200 V type)

2.4.2 Functions

Display Functions:

Value Display;	Displays values of the measured oxygen concentration, etc
Graph Display;	Displays trends of measured oxygen concentration
Data Display;	Displays various useful data for maintenance, such as cell temperature, reference junction temperature, maximum/minimum oxygen concentration, or the like.
Status Message;	Indicates an alarm or error occurrence with flashing of the corresponding icon. Indicates status such as warming-up, calibrating, or the like by icon.
Alarm, Error Display;	Displays alarms such as “Abnormal cell e.m.f.” when any such status occurs.

Calibration functions:

Auto-Calibration;	It calibrates automatically at specified intervals.
Semi-auto Calibration;	Input calibration direction on the touch screen or contact, then it calibrates automatically afterwards.
Manual Calibration;	Calibration with opening/closing the valve of calibration gas in operation interactively with an LCD touch screen.
Validation Function:	Permits control room activation of zero, span or midpoint gas concentrations without running an actual calibration.

Blow back Function: Output through the contact in the set period and time. Auto/Semi-auto selectable.

Maintenance Functions: Can operate updated data settings in daily operation and checking. Display data settings, calibration data settings, blow back data settings, current output loop check, input/output contact check.

Setup Functions: Initial settings suit for the plant conditions when installing the converter. Equipment settings, current output data settings, alarm data settings, contact data settings, other settings.

Self-diagnosis: This function diagnoses conditions of the converter or the detector and indicates when any abnormal condition occurs.

Password Functions: Enter your password to operate the analyzer excepting data display. Individual passwords can be set for maintenance and setup.

Display and Setting Content:

Measuring Related Items: Oxygen concentration (vol% O_2)

Display Items: Cell e.m.f. (mV), thermocouple e.m.f. (mV), cold junction resistance (Ω), cell temperature (°C), cold junction temperature (°C), span correction ratio (%), zero correction ratio (%), cell response time (second), cell condition(in four grades), cell internal resistance (Ω), next calibration estimate(year/month/day), heater on-time rate (%), time (year/month/day, hour/minute), software revision, maximum/ minimum/ average oxygen concentration (vol%O_2), calibration record (ten times), internal temperature rise alarm record.

Calibration Setting Items: Span gas concentration(vol%O_2), zero gas concentration(vol%O_2), calibration mode(auto, semi-auto, manual), calibration type and method (zero-span calibration, zero calibration only, span calibration only), stabilization time (minute/ second), calibration time (minute/second), calibration period (day/hour), starting time (year/month/day, hour/minute)

Equipment Related Items: Measuring gas selection; wet/dry
Detector selection; ZR22/ZO21

Output Related Items: Analog output/output mode selection, output conditions when warming- up/ maintenance/calibrating (during blow back)/abnormal, 4 mA/20 mA point oxygen concentration (vol%O_2), time constant, preset values when warming-up/ maintenance/calibrating during blow back abnormal, output preset values on abnormal.

Alarm Related Items: Oxygen concentration high alarm/high-high alarm limit values(vol% O_2), oxygen concentration low alarm/low-low alarm limit values (vol% O_2), oxygen concentration alarm hysteresis (vol% O_2), oxygen concentration alarm detection, alarm delay (seconds)

Converter Output: mA analog output (4 to 20 mA DC (maximum load resistance of 550 Ω)).
Average-value output; 3 points (average value a, average value b, average value c=(a+b)/2)
Independent output; Output to each channel
Range; Any setting between 0 to 5 through 0 to 100 vol% O_2 in 1 vol% O_2, or partial range is available (Maximum range value/minimum range value 1.3 or more)
For the log output, the minimum range value is fixed at 0.1 vol% O_2.
4 to 20 mA DC linear or log can be selected.
Input/output isolation; Isolation between the input channel. Isolation between the output channel (option).
Output damping; 0 to 255 seconds. Hold/non-hold selection, preset value setting possible with hold.

Contact Output: 5 points, contact capacity 30 V DC 3 A, 250 V AC 3 A (resistive load)
Four of the output points can be selected to either normally energized or normally deenergized status. Delayed functions (0 to 255 seconds) and hysteresis function (0 to 9.9 vol%O_2 can be added to high/low alarms.
The following functions are programmable for contact outputs.
(1) Abnormal, (2) High-high alarm, (3) High alarm, (4) Low-low alarm, (5) Low alarm, (6) Maintenance, (7) Calibration, (8) Range switching answerback, (9) Warm-up, (10) Calibration-gas pressure decrease (answerback of contact input), (11) Blow back start, (12) Process alarm (answerback of contact input), (13) Calibration coefficient alarm, (14) Internal temperature rise alarm.
Contact output 5 is set to normally operated, fixed error status.

Contact Output for Individual Channel Fail: Output to each channel. Normally energized.
Each channel cards provides a failure contact output.
(1) Abnormal cell, (2) Abnormal cell temperature (high/low), (3) Abnormal channel card, (4) Abnormal control card, (5) Abnormal card communication

Contact Input: 2 points, voltage-free contacts.
The following functions are programmable for contact inputs.
(1) Calibration-gas pressure decrease alarm, (2) Range switching,
(3) External calibration start, (4) Process alarm (if this signal is received, the heater power turns off), (5) Validation start, (6) Blow back start

Self-diagnosis: Abnormal cell, abnormal cell temperature (high/low), abnormal channel card, abnormal control card, abnormal card communication

Calibration: Method; zero/span calibration
Calibration mode; automatic, semi-automatic and manual (All are operated interactively with an LCD touchscreen). Either zero or span can be skipped.
Zero calibration-gas concentration setting range; 0.3 to 100 vol% O_2 (0.01 vol%O_2 in smallest units).
Span calibration-gas concentration setting range; 4.5 to 100 vol% O_2 (0.01 vol% O_2 in smallest units).
Use nitrogen-balanced mixed gas containing 0 to 10 % scale of oxygen, and 80 to 100 % scale of oxygen for standard zero gas and standard span-gas respectively.
Calibration period; date/time setting; maximum 255 days/23hours.

Model and Codes

Averaging Converter

Model	Suffix Code	Option Code	Description
AV550G	----------	----------	Averaging Converter
Base (*1)	-A	----------	4 Channel Base
	-B	----------	8 Channel Base
Number of Channel Card (*2)	-A1	----------	1 Oxygen Channel Card, Common Isolation
	-A2	----------	2 Oxygen Channel Cards, Common Isolation
	-A3	----------	3 Oxygen Channel Cards, Common Isolation
	-A4	----------	4 Oxygen Channel Cards, Common Isolation
	-A5	----------	5 Oxygen Channel Cards, Common Isolation
	-A6	----------	6 Oxygen Channel Cards, Common Isolation
	-A7	----------	7 Oxygen Channel Cards, Common Isolation
	-A8	----------	8 Oxygen Channel Cards, Common Isolation
	-B1	----------	1 Oxygen Channel Card, Individual Isolation
	-B2	----------	2 Oxygen Channel Cards, Individual Isolation
	-B3	----------	3 Oxygen Channel Cards, Individual Isolation
	-B4	----------	4 Oxygen Channel Cards, Individual Isolation
	-B5	----------	5 Oxygen Channel Cards, Individual Isolation
	-B6	----------	6 Oxygen Channel Cards, Individual Isolation
	-B7	----------	7 Oxygen Channel Cards, Individual Isolation
	-B8	----------	8 Oxygen Channel Cards, Individual Isolation
Display	-J	----------	Japanese
	-E	----------	English
	-F	----------	French
	-G	----------	German
Power supply	-1	----------	100 / 115 V AC
	-2	----------	230 V AC (*3)
Communication	-E	----------	HART communication
Options		/SCT --------	Stainless steel tag plate
		/24 ----------	24 Voltage output for Solenoid valve
		/G□□ -------	Cable gland (Numbers in □□ (*4)

(*1) Select code “-B” (8 Channel Base) when future expansion exceeding 4 channels is expected. By so doing, the expansion can be made economically.
(*2) Common isolation is recommended, when the same instrument receives the analog outputs from each channel card. Individual isolation is recommended to prevent the trouble by mutual interference, when different instrument receives the analog outputs from each channel card.
(*3) When suffix code “-2” (230 V AC) is selected, select code “-A” (4 Channel Base).
(*4) Input 01 to 30 in □ □.

Standard Accessories

Name	Part No	Quantity	Remarks
Fuse	A1112EF	2	2.5 A
Hexagonal Allen Wrench	L9827AS	1	For lock screw

Channel Card

Model	Suffix Code	Option Code	Description
AV55CM	----------	----------	Channel Card
Number of Channels (*1)	-A1	----------	1 Oxygen Channel Card, Common Isolation
	-A2	----------	2 Oxygen Channel Cards, Common Isolation
	-A3	----------	3 Oxygen Channel Cards, Common Isolation
	-A4	----------	4 Oxygen Channel Cards, Common Isolation
	-A5	----------	5 Oxygen Channel Cards, Common Isolation
	-A6	----------	6 Oxygen Channel Cards, Common Isolation
	-A7	----------	7 Oxygen Channel Cards, Common Isolation
	-A8	----------	8 Oxygen Channel Cards, Common Isolation
	-B1	----------	1 Oxygen Channel Card, Individual Isolation
	-B2	----------	2 Oxygen Channel Cards, Individual Isolation
	-B3	----------	3 Oxygen Channel Cards, Individual Isolation
	-B4	----------	4 Oxygen Channel Cards, Individual Isolation
	-B5	----------	5 Oxygen Channel Cards, Individual Isolation
	-B6	----------	6 Oxygen Channel Cards, Individual Isolation
	-B7	----------	7 Oxygen Channel Cards, Individual Isolation
	-B8	----------	8 Oxygen Channel Cards, Individual Isolation
—	-A	----------	Always -A
Option		/K1----------	Expansion power supply unit for dry contact output of solenoid valve output. (*2)
		/K2----------	Expansion power supply unit for 24 volt output of solenoid valve output. (*3)

(*1) -A ☐ are common Isolation types -B ☐ are Individual Isolation types
Up to 4 channel cards can be added in the 230 V AC version.
(*2) Expansion power supply unit is required, when using the 4 channel base and extending the number of channel cards to five or more.
The expansion power supply unit cannot be added in the 230 V AC version.
(*3) Expansion power supply unit is required, when using the 4 channel base and extending the number of channel cards to five or more. Available only in U.S.

• External Dimensions

Unit: mm

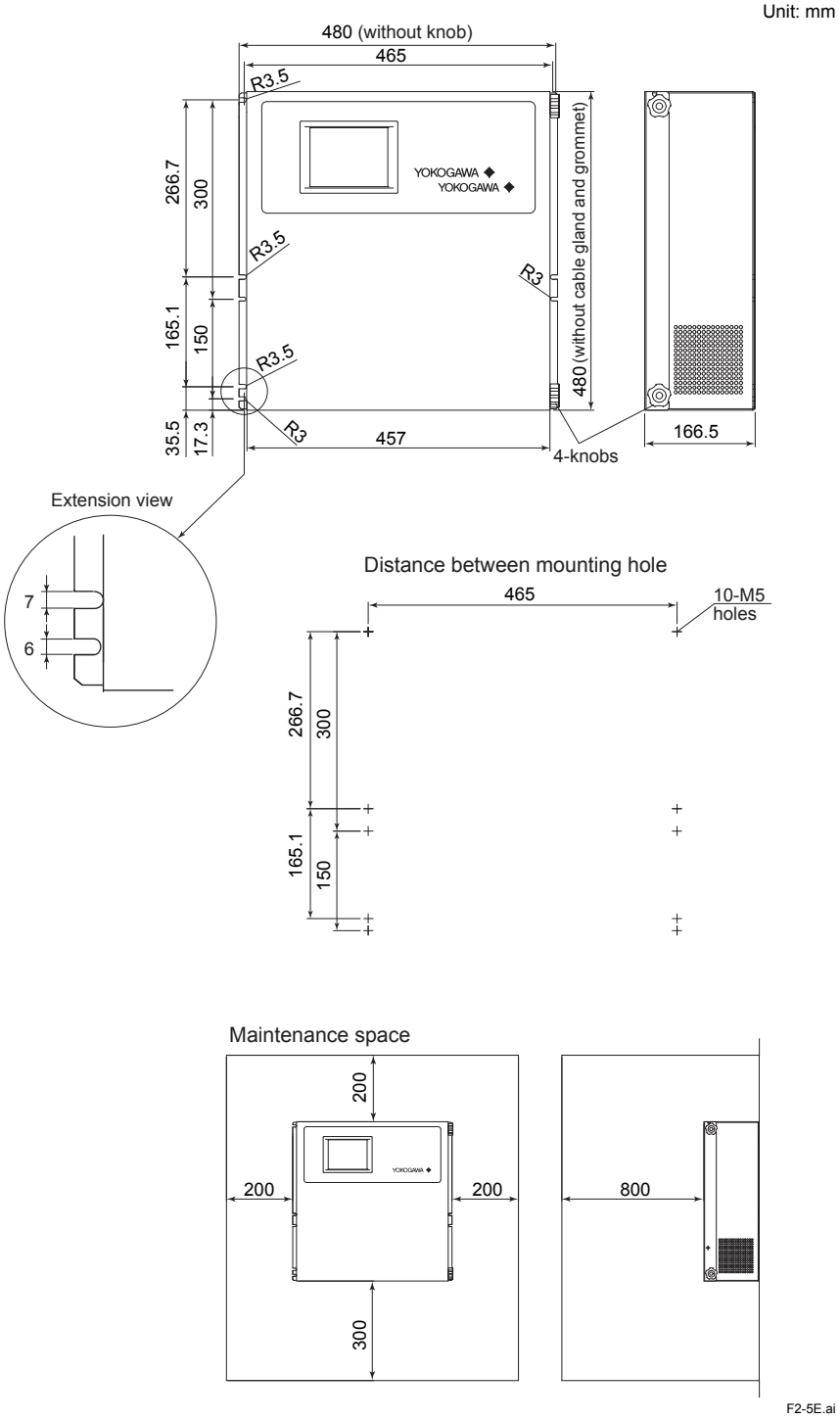

F2-5E.ai

2.5 ZA8F Flow Setting Unit

ZA8F Flow Setting Unit

This flow setting unit is applied to the reference gas and the calibration gas in a system configuration (System 1). Used when instrument air is provided.

This unit consists of a flowmeter and flow control valves to control the flow rates of calibration gas and reference gas.

Standard Specifications

Construction: Dust-proof and rainproof construction

Case Material: SPCC (Cold rolled steel sheet)

Painting: Baked epoxy resin, Dark-green (Munsell 2.0 GY 3.1/0.5 or equivalent)

Flowmeter Scale: Calibration gas; 0.1 to 1.0 l/min.
Reference gas; 0.1 to 1.0 l/min.

Tube Connections: Rc1/4 or 1/4 FNPT

Reference Gas pressure: Clean air supply of sample gas pressure plus approx. 50 kPa G (or sample gas pressure plus approx. 150 kPa G when a check valve is used). Pressure at inlet of the Flow Setting Unit.(Maximum 300 kPaG)

Reference Gas Consumption: Approx. 1.5 l/min

Calibration gas (zero gas, span gas) Consumption: Approx. 0.7 l/min (at calibration time only)

Weight: Approx. 2.3 kg

NOTE

Use instrument air for span calibration gas, if no instrument air is available, contact Yokogawa.

Model and Codes

Model	Suffix code	Option code	Description
ZA8F	--------	---------	Flow setting unit
Joint	-J -A	--------- ---------	Rc 1/4 With 1/4 NPT adapter
Style code	*C	---------	Style C

● External Dimensions

Unit : mm

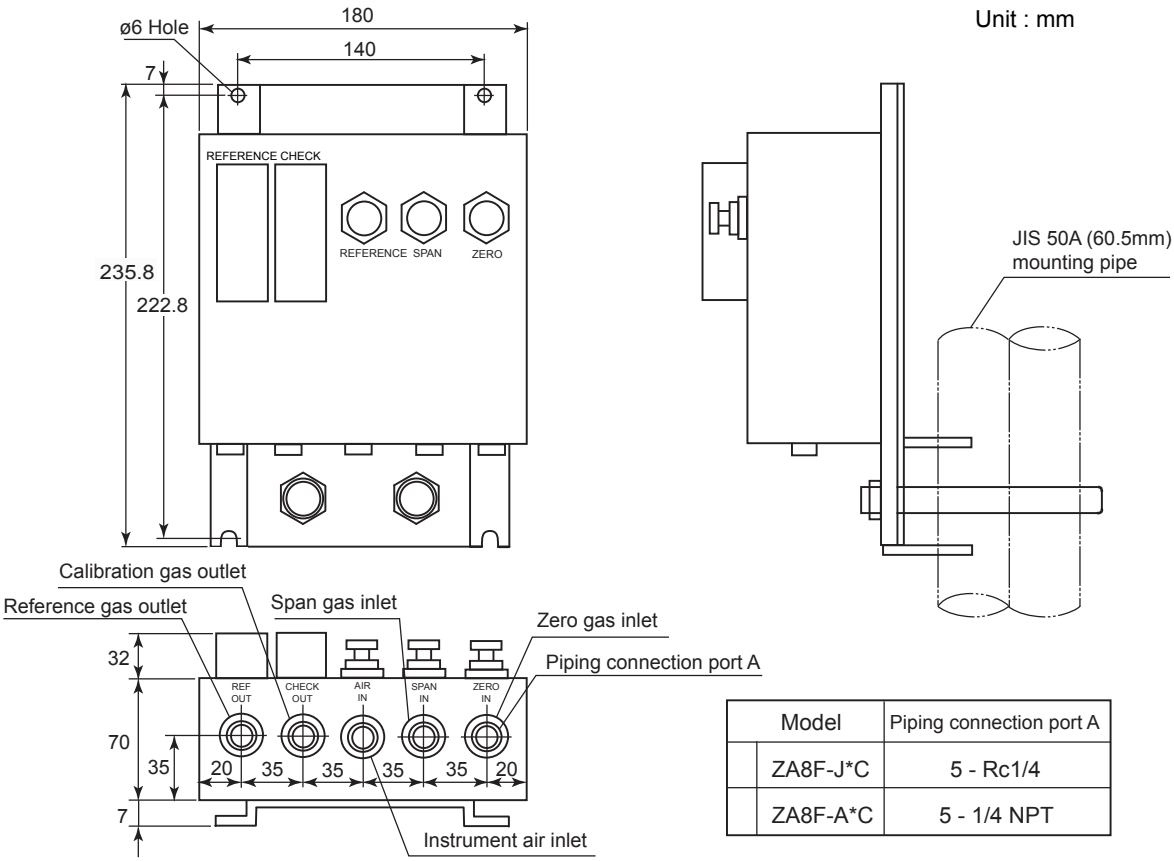

Model	Piping connection port A
ZA8F-J*C	5 - Rc1/4
ZA8F-A*C	5 - 1/4 NPT

Weight : Approx. 2.3 kg

PIPNG INSIDE THE FLOW SETTING UNIT

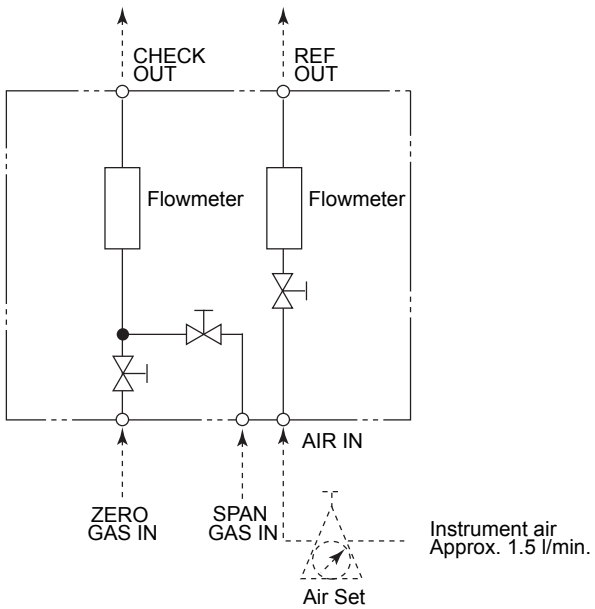

Air pressure ;
without check valve ; sample gas pressure + approx.50 kPaG
with check valve ; sample gas pressure + approx.150 kPaG

F2-6E.ai

2.6 Other Equipments

2.6.1 Dust Filter for the Detector (K9471UA)

This filter is used to protect the detector sensor from a corrosive dust components or high velocity dust in recovery boilers and cement kilns.

Sample gas flow rate is needed to be 1 m/sec or more to replace gas inside zirconia sensor.

• Standard specification

Applicable detector: Standard-type detector for general-purpose (the sample gas flow should be approximately perpendicular to the probe.)

Material: Carborundum (Filter), SUS316 (JIS)

Mesh: 30 microns

Weight: Approx. 0.2 kg

Part No.	Description
K9471UA	Filter
K9471UX	Tool

Unit : mm

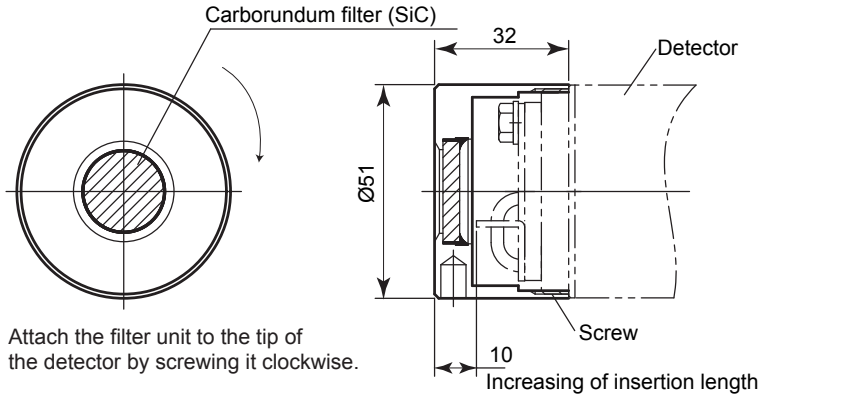

F2-7E.ai

2.6.2 Dust Guard Protector (K9471UC)

Recommended to be used when sample gas is likely to flow directly into the cell due to its flow direction in the stack or the like, flammable dust may go into the cell, or water drops are likely to fall and remain in the cell during downtime or the like due to the installation position.

Material: SUS316(JIS)

Weight: Approx. 0.3 kg

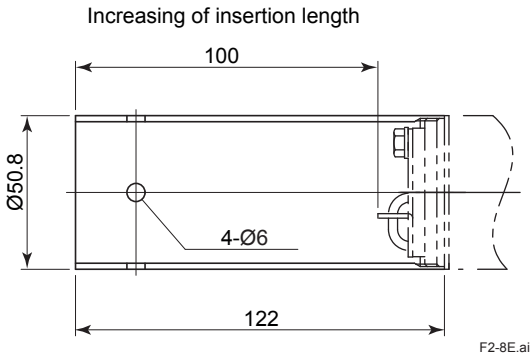

F2-8E.ai

2.6.3 Ejector Assembly for High Temperature (E7046EC, E7046EN)

This ejector assembly is used where pressure of sample gas for high temperature detector is negative. This ejector assembly consists of an ejector, a pressure gauge assembly and a needle valve.

Standard Specifications

Needle Valve

Connection: Rc1/4 or 1/4 FNPT

Material: SUS316 (JIS)

Pressure Gauge Assembly

Type: A(1.6) 3/8 x75 x100 kPa (JIS B7505)

Material in Contact with Gas: SUS316 (JIS)

Case Material: Aluminum alloy (Paint color; black)

Connection: R1/4 or 1/4 NPT, SUS304 (JIS) (with Bushing G3/8 x R1/4 or 1/4 FNPT)

Scale: 0 to 100 kPa G

Ejector

Ejector Inlet Air Pressure: 29 to 68 kPa G

Air Consumption: Approx. 30 to 40 l/min

Suction gas flow rate: 3 to 7 l/min

Connection to Blow: Rc1/4, SUS304 (JIS)

Tube Connection: Φ 6 / Φ 4 mm or 1/4 inch copper tube (stainless tube)

(Note) Pipe and connections are not provided.

Part No.	Description
E7046EC	Needle valve; Rc1/4, Ejector; Ø6 / Ø4 TUBE joint, Pressure gauge; R1/4
E7046EN	Needle valve; 1/4 FNPT, Ejector; 1/4 TUBE joint, Pressure gauge; 1/4 NPT

Dimension

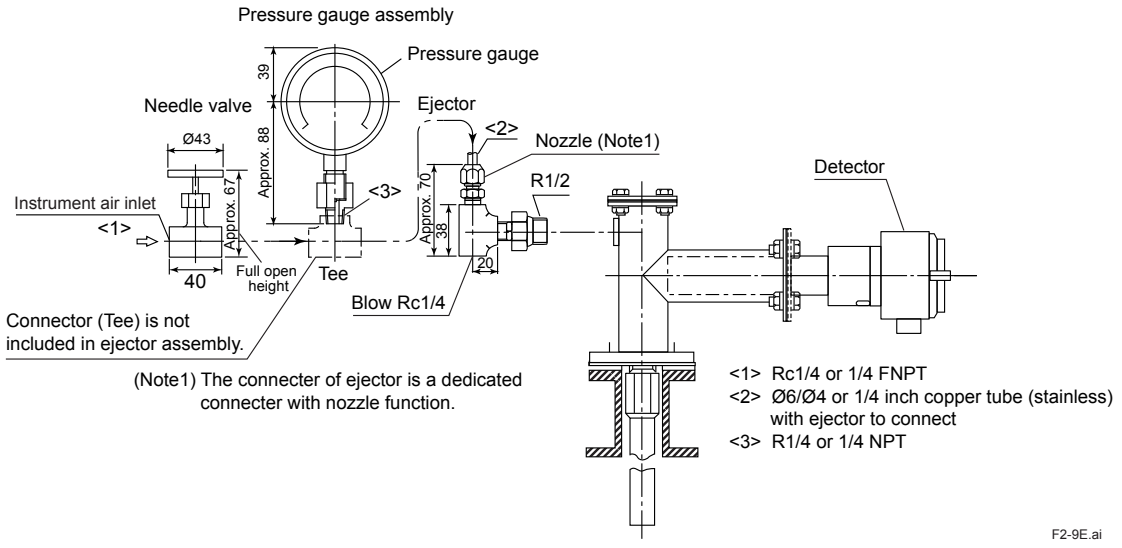

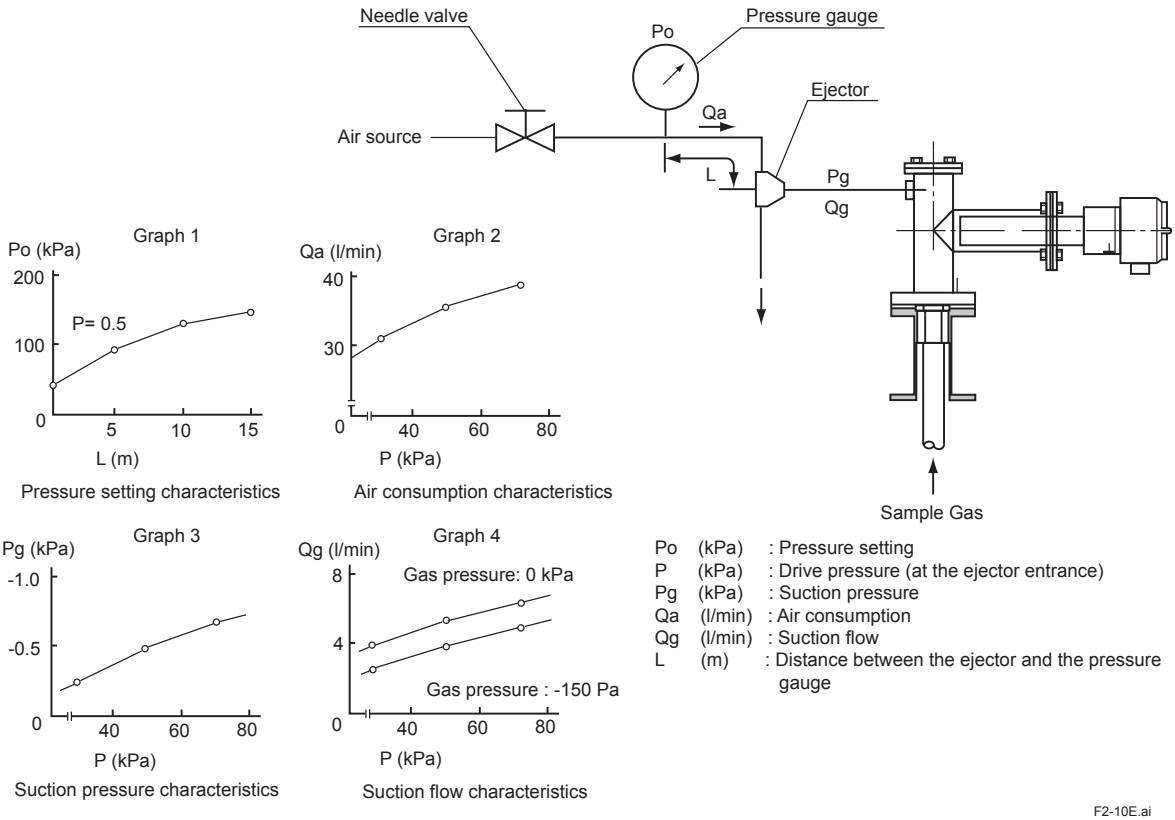

< Pressure setting for the ejector for high temperature use >

Pressure supply for the ejector should be set so that the suction flow of the sample gas becomes approximately 5 l/min.

To set this, proceed as follows:

(1) In Graph 4, draw a horizontal line from the 5 l/min point on the vertical axis (Suction flow: Qg) toward the gas pressure line to be used, to find the point of intersection. Draw a line vertically down from the point of intersection to the axis to find the drive pressure, P (at the ejector entrance).

(2) In Graph 1, determine Po (pressure setting) from L (the distance between the ejector and the pressure gauge).

(3) Open the needle valve to supply air for the ejector to the pressure gauge until it indicates the pressure setting, Po.

NOTE

Qg (the suction flow) may require change according to the conditions of use. Refer to Subsection 3.2.2 and Subsection 4.1.4 for details.

Graph explanation

1) Graph 1 is to compensate for pressure loss in piping between the ejector and the pressure gauge, and find Po (pressure setting).
2) Graph 2 shows correlation between P (drive pressure) and Qa (air consumption).
3) Graph 3 shows correlation between P (drive pressure) and Pg (suction pressure; when the sample gas inlet of the ejector is closed).
4) Graph 4 shows correlation between P (drive pressure) and Qg (suction flow) for each gas pressure.

2.6.4 Stop Valve (L9852CB, G7016XH)

This valve mounted on the calibration gas line in the system using ZA8F flow setting unit for manual calibration.

Standard Specifications

Material: SUS 316 (JIS)

Connection: Rc 1/4 or 1/4 FNPT

Weight: Approx. 80 g

Part No.	Description
L9852CB	Joint: Rc 1/4, Material: SUS316 (JIS)
G7016XH	Joint: 1/4 FNPT, Material: SUS316 (JIS)

Unit: mm

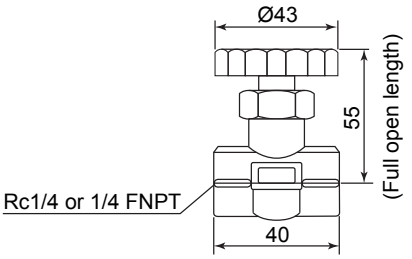

F2-11E.ai

2.6.5 Check Valve (K9292DN, K9292DS)

This valve is mounted on the calibration gas line (directly connected to the detector).

This valve prevents the sample gas from entering the calibration gas line. Although it functions as a stop valve, operation is easier than a stop valve as it does not require opening/closing at each calibration.

Screw a check valve, instead of a stop valve into the calibration gas inlet of the detector.

Standard Specifications

Material: SUS304 (JIS)

Connection: Rc1/4 or 1/4 FNPT

Pressure: 150 kPa G or more and 350 kPa G or less

Weight: Approx. 40 g

Part No.	Description
K9292DN	Joint: Rc 1/4, Material: SUS304 (JIS)
K9292DS	Joint: 1/4 FNPT, Material: SUS304 (JIS)

K9292DN : Rc 1/4(A),R 1/4(B)
K9292DS : 1/4 FNPT(A),1/4 NPT(Male)(B)

Unit: mm

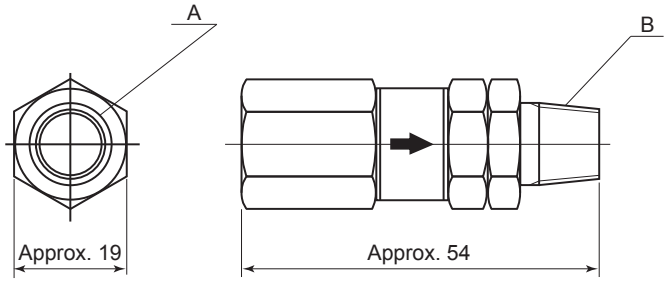

F2-12E.ai

2.6.6 Air Set

This set is used to lower the pressure when instrument air is used as the reference and span gases.

Standard Specifications

• G7003XF, K9473XK

Primary Pressure: Max. 1 MPa G

Secondary Pressure: 0.02 to 0.2 MPa G

Connection: Rc1/4 or 1/4 FNPT (with joint adapter)

Weight: Approx.1 kg

Part No.	Description
G7003XF	Joint: Rc 1/4, Material: Zinc alloy
K9473XK	Joint: 1/4 FNPT (with joint adapter), Material: Zinc alloy, Adapter: SUS 316

• G7004XF, K9473XG

Primary Pressure: Max. 1 MPa G

Secondary Pressure: 0.02 to 0.5 MPa G

Connection: Rc1/4 or 1/4 FNPT with joint adapter

Weight: Approx. 1 kg

Part No.	Description
G7004XF	Joint: Rc 1/4, Material: Zinc alloy
K9473XG	Joint: 1/4 FNPT (with joint adapter), Material: Zinc alloy, Adapter: SUS 316

● External Dimensions

Unit : mm

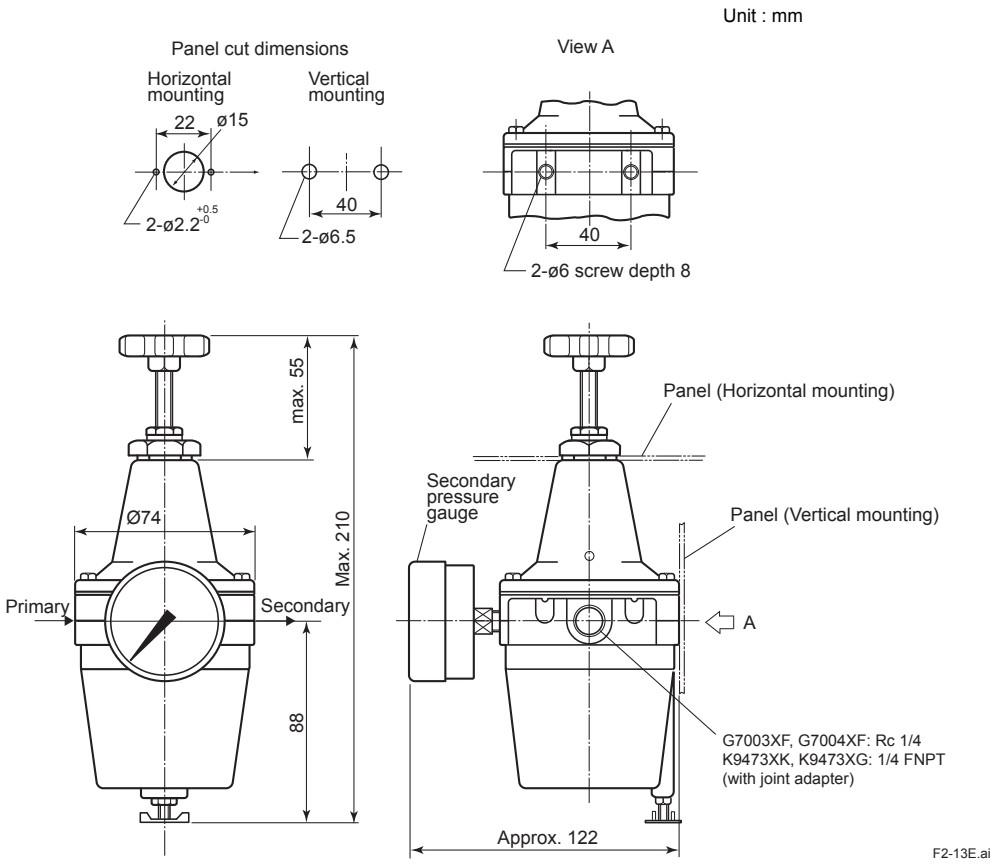

2.6.7 Zero Gas Cylinder (G7001ZC)

The gas from this cylinder is used as the calibration zero gas and detector purge gas.

Standard Specifications

Capacity:	3.4 l
Filled Pressure:	9.8 to 12 MPa G
Composition:	0.95 to 1.0 vol% O_2 in N_2
Weight:	Approx. 6 kg

(Note) Export of such high pressure filled gas cylinder to most countries is prohibited or restricted.

Unit : mm

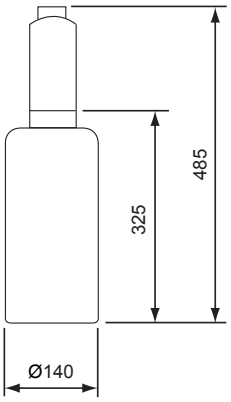

F2-14E.ai

2.6.8 Cylinder Pressure Reducing Valve (G7013XF, G7014XF)

This pressure reducing valve is used with the zero gas cylinders.

Standard Specifications

Primary Pressure:	Max. 14.8 MPa G
Secondary Pressure:	0 to 0.4 MPa G
Connection:	Inlet; W22 14 threads, right hand screw
	Outlet; Rc1/4 or 1/4 FNPT
Material:	Brass body

Unit : mm

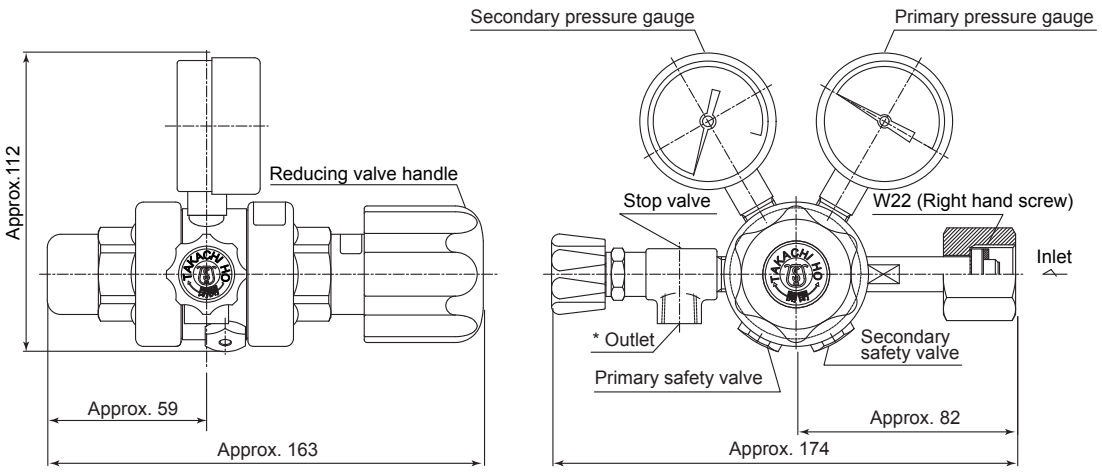

Part No.	* Outlet
G7013XF	Rc1/4
G7014XF	1/4 NPT female with adapter

F2-15E.ai

2.6.9 Case Assembly for Calibration Gas Cylinder (E7044KF)

This case assembly is used to store the zero gas cylinders.

Standard Specifications

Installation: JIS 50A (Ø 60.5 mm) pipe mounting

Material: SPCC (Cold rolled steel sheet)

Case Paint: Baked epoxy resin, Jade green (Munsell 7.5 BG 4/1.5)

Weight: Approx. 3.6 kg, Approx. 10 kg with gas cylinder

(Note) Export of such high pressure filled gas cylinder to most countries prohibited or restricted.

Unit : mm

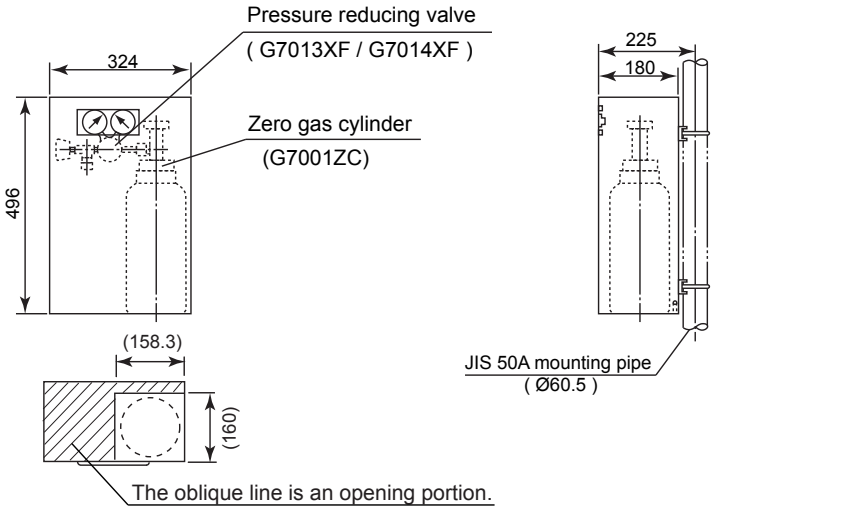

(Note) The zero gas cylinder and the reducing valve are not included in the E7044KF (case assembly)

2.6.10 ZR22A Heater Assembly

Model and Codes

Style: S2

Model	Suffix code	Option code	Description
ZR22A	---------	----------	Heater Assembly for ZR22G
Length (*1)	-015	----------	0.15 m
	-040	----------	0.4 m
	-070	----------	0.7 m
	-100	----------	1 m
	-150	----------	1.5 m
	-200	----------	2 m
	-250	----------	2.5 m
	-300	----------	3 m
Jig for change	-A	----------	with Jig (*2)
	-N	----------	None
Reference gas (*3)	-A	----------	Natural convention, Instrument air
	-B	----------	Pressure compensated (for ZR22G S2)
	-C	----------	Pressure compensated (for ZR22G S1)

*1 Suffix code of length should be selected as same as ZR22G installed.
*2 Jig part no. is K9470BX to order as a parts after purchase.
*3 Select appropriately among “-A”, “-B”, “-C” according to the reference gas supply method and style.
(Note) The heater is made of ceramic, do not drop or subject it to pressure stress.

• External Dimensions

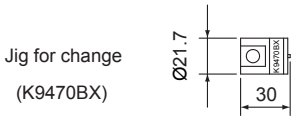

Unit : mm

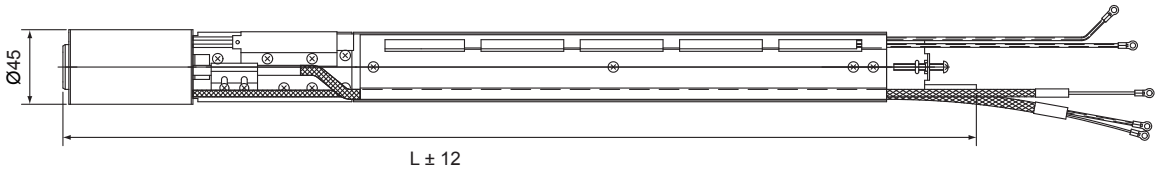

Model & Codes	L	Weight (kg)
ZR22A-015	302	Approx. 0.5
ZR22A-040	552	Approx. 0.8
ZR22A-070	852	Approx. 1.2
ZR22A-100	1152	Approx. 1.6
ZR22A-150	1652	Approx. 2.2
ZR22A-200	2152	Approx. 2.8
ZR22A-250	2652	Approx. 3.4
ZR22A-300	3152	Approx. 4.0

F2-17E.ai

Blank Page

3. Installation

This chapter describes installation of the following equipment:

Section 3.1	General-purpose Detector (except ZR22G-015)
Section 3.2	High Temperature Detector (ZR22G-015)
Section 3.3	AV550G Averaging Converter
Section 3.4	ZA8F Flow Setting Unit
Section 3.5	Case Assembly (E7044KF)

3.1 Installation of General-purpose Detector

3.1.1 Installation Location

The following should be taken into consideration when installing the detector:

(1) Easy and safe access to the detector for checking and maintenance work.

(2) An ambient temperature of not more than 150 °C, and the terminal box should not be affected by radiant heat.

(3) A clean environment without any corrosive gases.

NOTE

A natural convection type detector (model ZR22G-□-□-□-C), which uses ambient air as reference gas, requires that the ambient oxygen concentration be constant.

(4) No vibration.

(5) The sample gas satisfies the specifications described in Chapter 2.

3.1.2 Probe Insertion Hole

Includes those analyzers equipped with a dust filter, a dust guard protector and probe protector.

When preparing the probe insertion hole, the following should be taken into consideration:

CAUTION

- The outside dimension of detector may vary depending on its options. Use a pipe that is large enough for the detector. Refer to Figure 3.1 for the dimensions.
- If the detector is mounted horizontally, the calibration gas inlet and reference gas inlet should face downwards.
- When using the detector with pressure compensation, ensure that the flange gasket does not block the reference gas outlet on the detector flange. If the flange gasket blocks the outlet, the detector cannot conduct pressure compensation. Where necessary, make a notch in the flange gasket. Confirm the external dimensions of the detector in Section 2.2 before installation.
- The sensor (zirconia cell) at the tip of the detector may deteriorate due to thermal shock if water drops are allowed to fall on it, as it is always at high temperature.

(1) Do not mount the probe with the tip higher than the probe base.

(2) If the probe length is 2.5 meters or more, the detector should be mounted vertically (no more than a 5° tilt).

(3) The detector probe should be mounted at right angles to the sample gas flow or the probe tip should point downstream.

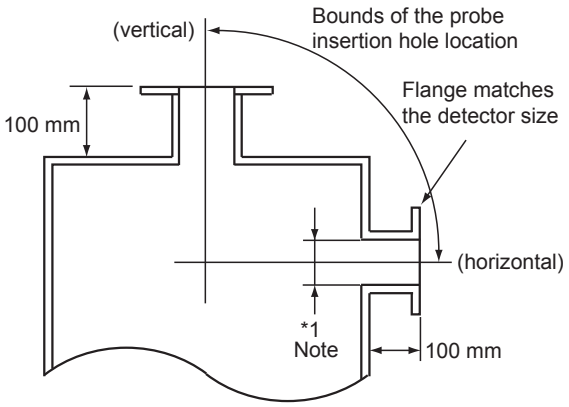

*1

Type	Outside diameter of detector
Standard	50.8 mm in diameter (Note)
With dust filter	51 mm in diameter (Note)
With probe protector	60.5 mm in diameter (Note)

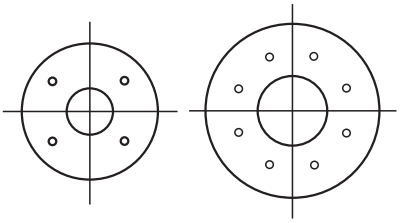

(Note)
When using the detector with pressure compensation, ensure that the flange gasket does not block the reference gas outlet on the detector flange. If the flange gasket blocks the outlet, the detector cannot perform pressure compensation.
Where necessary, make a notch in the flange gasket. Confirm the outside dimensions of the detector in Section 2.2 before installation.

Figure 3.1 Example of the probe insertion hole.

3.1.3 Installation of the Detector

CAUTION

- The cell (sensor) at the tip of the detector is made of ceramic (zirconia). Do not drop the detector, as impact will damage it.
- A gasket should be used between the flanges to prevent gas leakage. The gasket material should be heatproof and corrosion-proof, suited to the characteristics of the sample gas.

The following should be taken into consideration when mounting the general-purpose detector:

<General-purpose detector>

(1) Make sure that the cell mounting screws (four bolts) at the tip of the detector are not loose.

If a dust filter (see Subsection 2.6.1) is used, make sure it is properly attached to the detector. Refer to Subsection 3.1.4 for installation of the dust filter.

(2) Where the detector is mounted horizontally, the calibration gas inlet and the reference gas inlet should face downward.

3.1.4 Installation of the Dust Filter (K9471UA), Dust Guard Protector (K9471UC), Probe Protector ZO21R

<Procedures for installation of the dust filter (K9471UA)>

CAUTION

- The dust filter is used to protect the Zirconia sensor from corrosive dust or a high concentration of dust such as in utility boilers and cement kilns. If a filter is used in combustion systems other than these, it may have adverse effects such as response delay. These combustion conditions should be examined carefully before using a filter.
- The dust filter requires gas flow of 1 m/sec or faster at the front surface of the filter.

When you specify option code /F1, the detector is shipped with the dust filter mounted.
Follow this procedure replace the filter on the detector . It is recommended that you read Chapter 11 prior to filter mounting, for it is necessary to be familiar with the detector's construction, especially the sensor assembly.

(1) Mount the dust filter assembly by putting it on the end of the detector and screw the assembly clockwise. Put a hook pin wrench (K9471UX), Φ52 to 55 in diameter, into the hole on the assembly to fasten or remove it. Apply a heat-resistant coating (see Note 1) to the threads on the detector. When remounting filter assembly after having once removed it from the detector, reapply the heat-resistant coating.

Note 1: As the detector is heated to 700 °C, it is recommended to use heat-resistant coating on the threads to prevent seizing up. Name of the heat-resistant coating material: NEVER SEEZ Nickel Special".

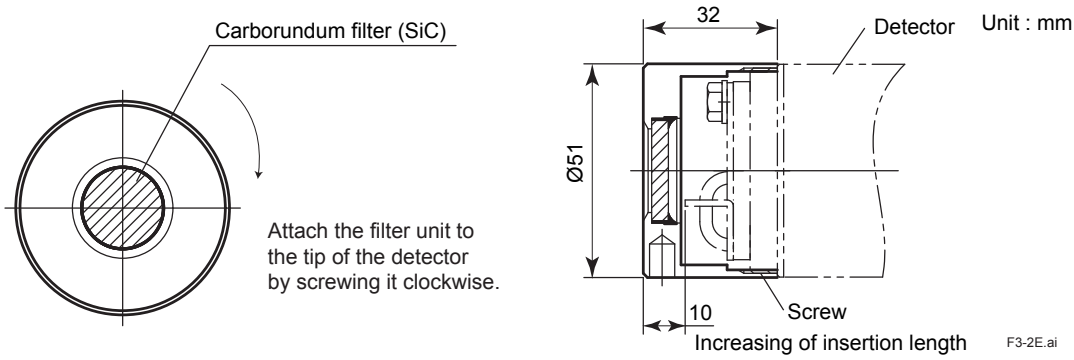

Figure 3.2.1 Installation of the dust filter

< Procedures for installation of the dust guard protector (K9471UC)>

The ZR22G detector is shipped with the dust guard protector when the option code / F2 is specified in case of ordering the detector. The protector should be used when preventing dusts and water drops from lowering the detector performance is desired.
Screw the protector on the top of the detector so as to cover the top. When attaching or detaching the protector, perform by hooking holes of its side with a hook pin wrench for Φ52-55 hole (Pin diameter 4.5 mm: P/N K9471UX or the like) or by pass a screwdriver through the holes. When re-attaching the protector after detaching it, apply the "NEVER SEEZ Nickel Special" to it.

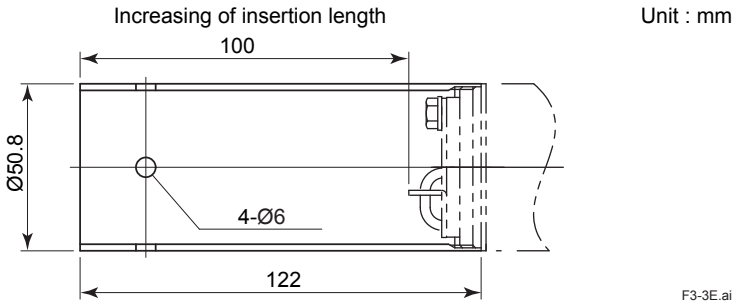

Figure 3.2.2 Installation of the dust guard protector

<Detector with a probe protector (Model ZO21R-L-200-☐ *B for enhance forth>

The detector is used with a probe protector to support the probe (ZR22G) when the probe length is 2.5 m or more and it is mounted horizontally.

(1) Put a gasket (provided by the user) between the flanges, and mount the probe protector in the probe insertion hole.

(2) Make sure that the sensor assembly mounting screws (four bolts) at the tip of the detector are not loose.

(3) Mount the detector so that the reference gas and calibration gas inlet faces downward.

Figure 3.3 Probe protector (supporting the mounting strength)

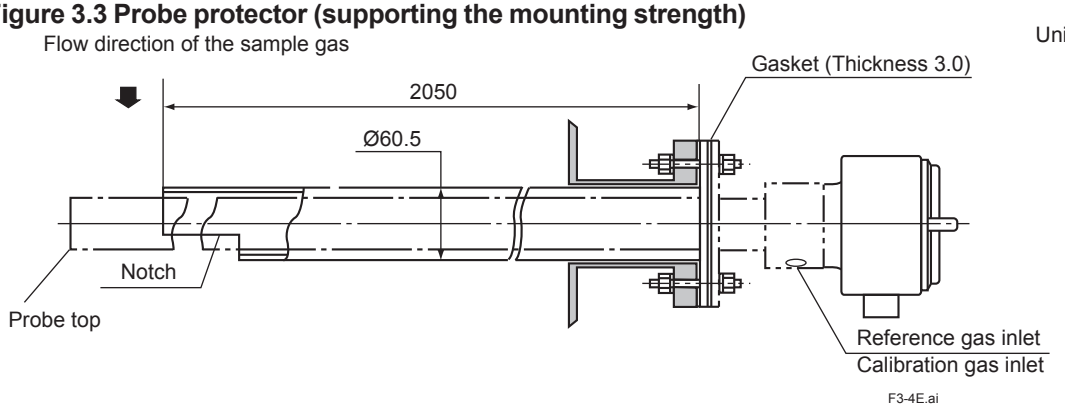

<Detector with a probe protector (Model ZO21R-L-☐☐☐-☐ *B for dust wear protect>

The detector is used with a probe protector to prevent the sensor from being worn by dust particles when there is a high concentration of dust and gas flow exceeds 10 m/sec (pulverized coal boiler or fluidized-bed furnace).

(1) Put a gasket (provided by the user) between the flanges, and mount the probe protector in the probe insertion hole. The probe protector should be installed so that the notch is downstream of the sample gas flow.

(2) Make sure that the sensor assembly mounting screws (four bolts) at the probe tip are not loose.

(3) Where the detector is mounted horizontally, the reference gas and calibration gas inlet should face downward.

When the probe length of the ZR22G is more than 2m, consult Yokogawa.

NOTE

When the probe protector is used in the ZR22G with pressure compensation (-P), instrument air leaking from the probe protector may affect the measured value.

Unit: mm

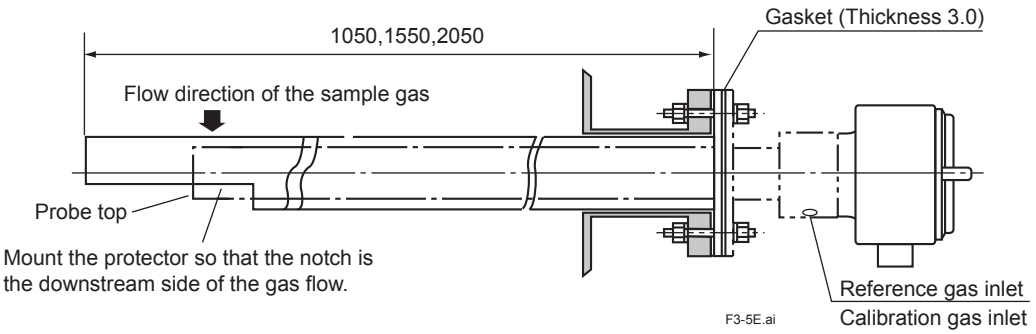

Figure 3.4 Probe protector (for dust wear protect)

3.2 Installation of High Temperature Detector (ZR22G-015)

3.2.1 Installation Location

This detector is used with the High Temperature Probe Adapter (Model ZO21P) when the temperature of sample gas exceeds 700 °C, or when it is required due to maintenance spaces.

The following should be taken into consideration when installing the detector:

(1) Easy and safe access to the detector for checking and maintenance work.

(2) Ambient temperature of not more than 150 °C and the terminal box should not be exposed to radiant heat.

(3) A clean environment without any corrosive gases.

(4) No vibration.

(5) The sample gas should satisfy the specifications described in Chapter 2.

3.2.2 Usage of the High Temperature Probe Adapter (ZO21P)

During analysis, the surface temperature of the probe adapter should be within the range from more than the dew point of the sample gas and 300 °C or less to prevent ejector clogging, gasket deterioration or bolt scoring.

Where the dew point of the sample gas is not known, keep within the range of more than 200 °C to less than 300 °C.

The temperature shall be measured at the probe in the probe adapter and the surface of the blind flange at the opposite side.

When the surface temperature is not within the above range, the following measures can be taken to change the temperature.

<When the surface temperature exceeds 300 °C>

(1) When the furnace pressure is negative, lower the pressure setting to reduce induction flow of the sample gas. Refer to Subsection 2.6.3, Ejector Assembly for High Temperature, for the setting of induction flow. When you reduce induction flow, ensure that the ejector inducts air when the furnace pressure fluctuates.

(2) When the furnace pressure is positive, close the needle valve for the sample gas outlet to reduce the exhaust gas flow. Refer to Subsection 4.1.4, Piping to the High Temperature Probe Adapter.

(3) When the probe adapter is surrounded by a heat insulator, remove the heat insulator. Ensure that the temperature of the probe adapter does not fall below the dew point of the gas in winter.

(4) To prevent temperature rises due to radiant heat, insert heat insulator between the wall of the furnace and the probe adapter.

(5) To prevent temperature rises from thermal conduction, place the mounting flange as far from the wall of the furnace as possible.

<When the surface temperature is less than 200 °C or below the dew point of the sample gas>

(1) When the furnace pressure is negative, raise the pressure setting to increase induction flow of the sample gas. Refer to Subsection 2.6.3, Ejector Assembly for High Temperature, for the setting of induction flow. If there is much dust in the gas, the ejector may become clogged as induction flow increases.

(2) When the furnace pressure is positive, open the needle valve of the sample gas outlet to increase the gas flow. Refer to Subsection 4.1.4, Piping to the High Temperature Probe Adapter.

(3) Warm the probe adapter. Refer to Subsection 4.1.4, Piping to the High Temperature Probe Adapter.

(4) When the surface temperature is still less than 200 °C or below the dew point of the sample gas, even if the above measures have been taken, warm the probe adapter using a heat source such as steam.

3.2.3 Probe Insertion Hole

A high temperature detector consists of a ZR22G-015 Detector and ZO21P High Temperature Probe Adapter. When forming the probe insertion hole, the following should be taken into consideration:

(1) If the probe of the ZO21P is made of silicon carbide (SiC), the probe hole should be formed so that the probe is mounted vertically (within ± 5° tilt).

(2) In the case where the probe of the ZO21P is made of stainless steel and the high temperature probe adapter (ZO21P-H-B) is to be mounted horizontally, the probe hole should be formed so that the probe tip is not higher than the probe base.

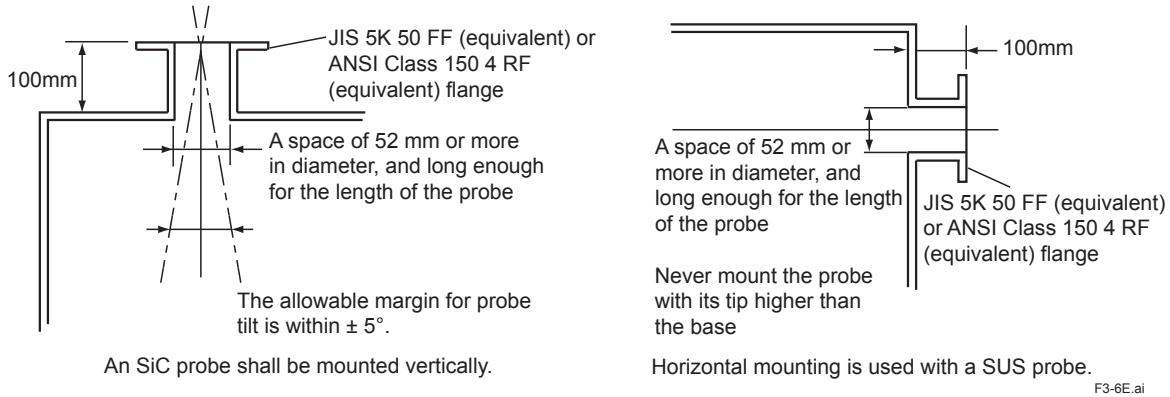

Figure 3.5 Examples of the probe insertion hole

3.2.4 Mounting of the High Temperature Detector

CAUTION

- Ceramic (zirconia) is used in the sensor (cell) portion on the detector probe tip. Care should be taken not to drop the detector during installation.
- The same applies to the high temperature probe adapter with a probe made of silicon carbide (SiC).
- A gasket should be used on the flange surface to prevent gas leakage. The gasket material should be selected depending on the characteristics of the sample gas. It should be heatproof and corrosion-proof. The parts, which should be supplied by the user, are listed in Table 3.1.

Table 3.1 Accessories for mounting high temperature probe adapter

Mounting flange specification	Parts name	Q'ty	Note
JIS 5K 50 FF (equivalent)	Gasket	1	Heatproof and corrosion-proof
	Bolt (M12 by 50)	4	
	Nut (M12)	4	
	Washer (for M12)	8	
ANSI Class 150 4 RF (equivalent)	Gasket	1	Heatproof and corrosion-proof
	Bolt (M16 by 60)	8	
	Nut (M16)	8	
	Washer (for M16)	16	

A high temperature detector should be mounted as follows:

(1) It is recommended to mount the detector vertically. When it is impossible due to the physical arrangements and the detector is mounted horizontally, ensure that the probe tip be placed no higher than the probe base.

(2) When mounting a high temperature probe adapter, be sure to insert a gasket between the flanges to prevent gas leakage. When the furnace pressure is negative, ensure that there is no leakage of air into the detector.

(3) When mounting the detector in a position other than vertical, the cable inlet should face downward.

(4) When installing the detector in a low-temperature location such as in the open air, cover the probe adapter including the ejector with a heat insulator (e.g. ceramic wool) to keep it warm and to prevent condensation of drain on the ejector.

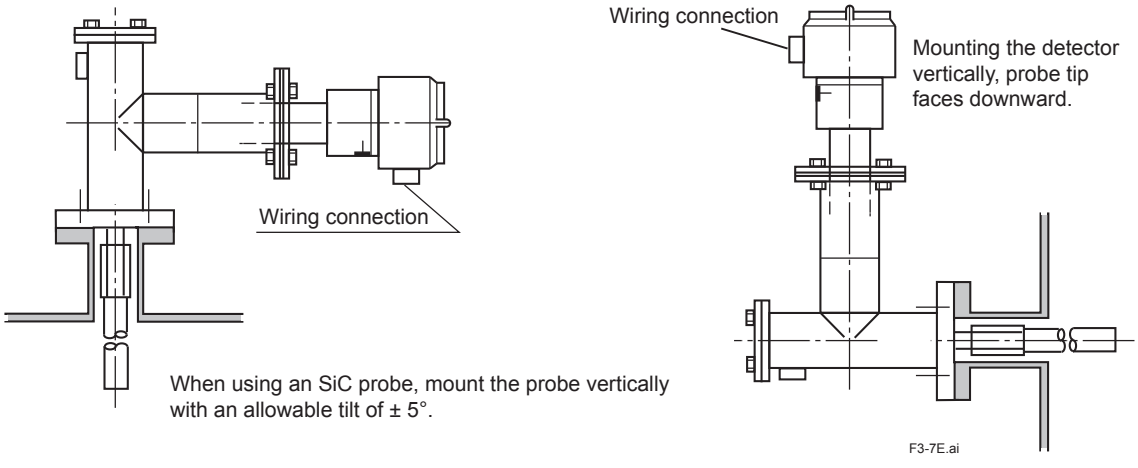

Figure 3.6 Mounting of the High Temperature Detector

3.3 Installation of the Averaging Converter

The averaging converter is designed for indoor installation and should be installed in the instrument panel in a control room. For outdoor installation, the averaging converter should be installed in an outdoor instrument panel protected from direct sunlight and the weather.

WARNING

High voltages are present inside the averaging converter. To prevent unintentional opening of the front cover, it is securely attached by a lock screw on the right side of the case. Loosen the lock screw to remove the front cover, and securely tighten the lock screw after the front cover has been attached.

How to remove the front cover

- Loosen the 4 knob bolts by hand, and then loosen the lock screw with the Allen wrench supplied.
- Remove the front cover by lifting up slightly then pulling away from the case.

How to attach the front cover

- Attach the front cover, aligning the slots on the sides of the cover with the knob bolts on the case, and then pull the cover down until it is seated firmly.
- Hand tighten the knob bolts, and then securely tighten the lock screw with the Allen wrench supplied.

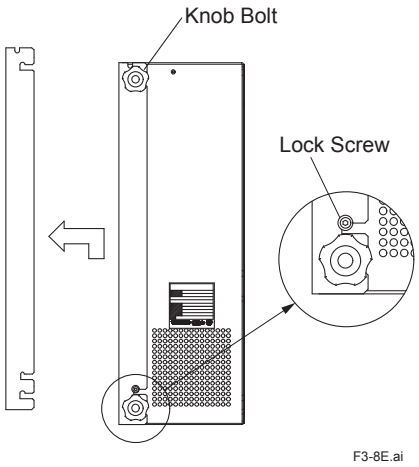

Figure 3.7 How to Remove/Attach the Front Cover

3.3.1 Installation Location

Follow the guidelines below when selecting a location for the averaging converter.

(1) The touch screen display should be clearly visible and easily accessible for key operation: the display at eye level is recommended.

(2) A wall or construction should be strong enough to support the weight of the converter.

(3) The converter should be easily accessible for inspections and maintenance.

(4) The ambient temperature should be in the range of -5 to 50°C and the temperature variation should be small: the daily temperature range within 15°C is recommended.

(5) The humidity should be in the range of 10 to 85%RH and no condensation may occur.

(6) No corrosive gases are present.

(7) No dust exists.

(8) There is minimal vibration.

(9) The converter should be near the detectors: the two-way resistance between detector and converter should not exceed 10Ω.

WARNING

The averaging converter is heavy. Take extra care not to accidentally drop it. Installation work should be done by an adequate number of people.

CAUTION

The averaging converter is heavy (100/115 V AC version: approx. 13 kg, 230 V AC version: approx. 25 kg) so needs to be installed on a wall or construction strong enough to support.

3.3.2 Installation in an Instrument Panel

When installing the averaging converter in an instrument panel, operability, maintainability, and environmental resistance should be considered.

(1) Installation Space and Relationship to Peripheral Devices

Follow the instructions below to determine the positions of the averaging converter and peripheral devices.

- Do not place heat-generating devices in close proximity of the averaging converter: specially, avoid a place under the averaging converter.
- Do not place power related devices such as transformers or electromagnetic switches in close proximity of the averaging converter.
- Segregate wiring ducts for signal lines and those for power lines and do not place in close proximity.

Figure 3.8 shows the requirements for the mounting holes for the averaging converter.
See Section 2.4 for the dimensions of the averaging converter and maintenance clearance.

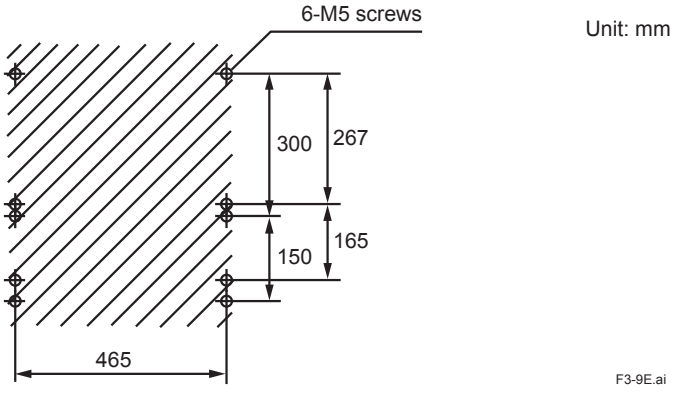

Figure 3.8 Mounting holes

(2) Preventing Excessive Temperature Rise in an Instrument Panel

Use a cooling method such as one of those shown in Figure 3.9 if there is a danger of the temperature inside an instrument panel exceeding the temperature range limits.

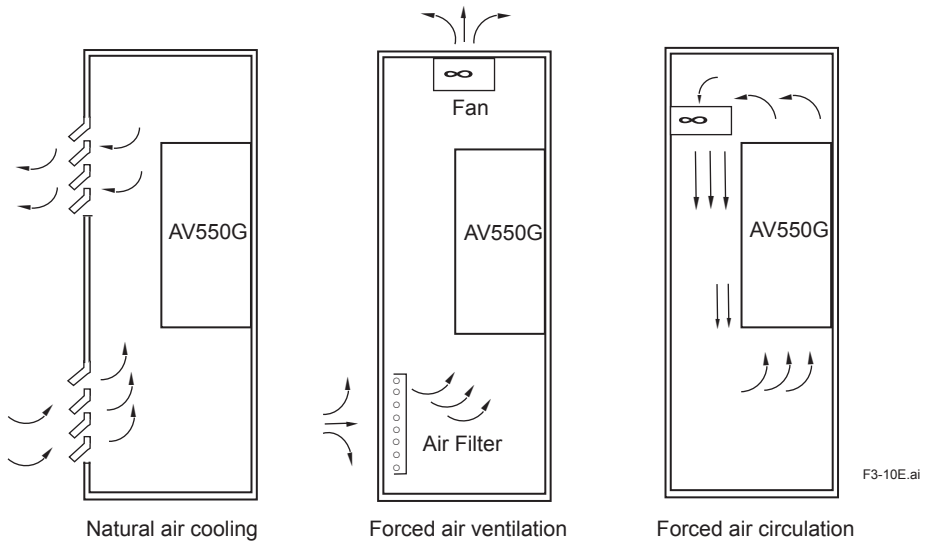

Figure 3.9 Preventing Excessive Temperature Rise in Panel

CAUTION

If an internal temperature rise alarm occurs, use a more effective method to cool the inside of an instrument panel down to within the converter operating temperature range.

3.3.3 Outdoor Installation

The averaging converter is designed for indoor installation. For outdoor installation, the averaging converter should be housed in an outdoor case protected from direct sunlight and the weather. The outdoor case should be equipped with a cooling system for controlling the internal temperature, if necessary. Also, the outdoor case should be installed in a location that keeps the case free from corrosive gases or dust.

CAUTION

If an internal temperature rise alarm occurs, use a more effective method to cool the inside of an instrument panel down to within the converter operating temperature range.

3.4 Installation of ZA8F Flow Setting Unit

3.4.1 Installation Location

The following should be taken into consideration:

(1) Easy access to the unit for checking and maintenance work.

(2) Near to the detector or the converter.

(3) No corrosive gas.

(4) An ambient temperature of not more than 55 °C and little changes of temperature.

(5) No vibration.

(6) Little exposure to rays of the sun or rain.

3.4.2 Mounting of ZA8F Flow Setting Unit

The flow setting unit can be mounted either on a pipe (nominal JIS 50A) or on a wall. It should be positioned vertically so that the flowmeter works correctly.

<Pipe Mounting>

(1) Prepare a vertical pipe of sufficient strength (nominal JIS 50A: O.D. 60.5 mm) for mounting the flow setting unit. (The unit weighs approximately 2 to 3.5 kg.)

(2) Mount the flow setting unit on the pipe by tightening the nuts with the U-bolt so that the metal fitting is firmly attached to the pipe.

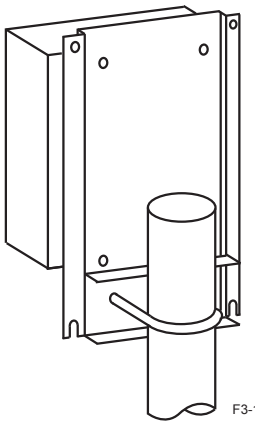

Figure 3.10 Pipe Mounting

<Wall Mounting>

(1) Make a hole in the wall as illustrated in Figure 3.11.

(2) Mount the flow setting unit. Remove the pipe mounting parts from the mount fittings of the flow setting unit and attach the unit securely on the wall with four screws.

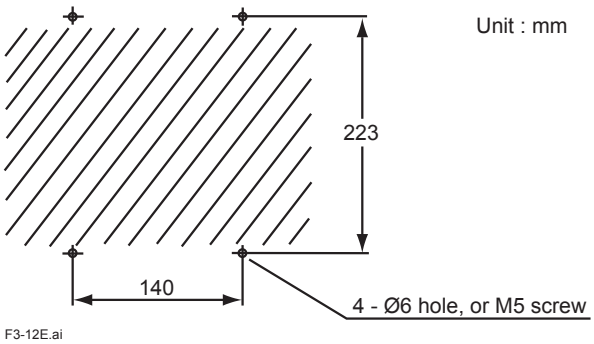

Figure 3.11 Mounting holes

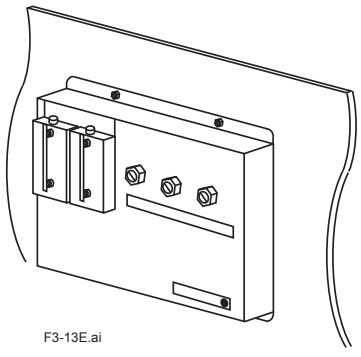

Figure 3.12 Wall mounting

3.5 Installation of the Case Assembly(E7044KF)

The case assembly is used to store the G7001ZC zero gas cylinders.

3.5.1 Installation Location

The following should be taken into consideration:

(1) Easy access for cylinder replacement.

(2) Easy access for checking.

(3) Near to the detector or converter as well as the flow setting unit.

(4) The temperature of the case should not exceed 40 °C due to rays of the sun or radiated heat.

(5) No vibration.

3.5.2 Mounting

Mount case assembly on a pipe (nominal JIS 50A) as follows:

(1) Prepare a vertical pipe of sufficient strength (nominal JIS 50A: O.D. 60.5 mm) for mounting the case assembly. (The sum of the case assembly and the calibration gas cylinder weights approximately 4.2 kg.)

(2) Mount the case assembly on the pipe by tightening the nuts with the U-bolt so that the metal fitting is firmly attached to the pipe.

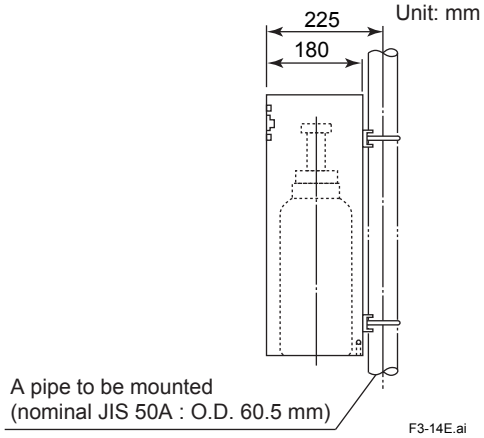

Figure 3.13 Pipe Mounting

4. Piping

This chapter describes piping procedures for the AV550G Zirconia Oxygen Analyzer Averaging Converter system based on two typical system configurations.

4.1 Piping for a System Using Flow Setting Units for Manual Calibration

The piping for a system using flow setting units for manual calibration is shown in Figure 4.1.

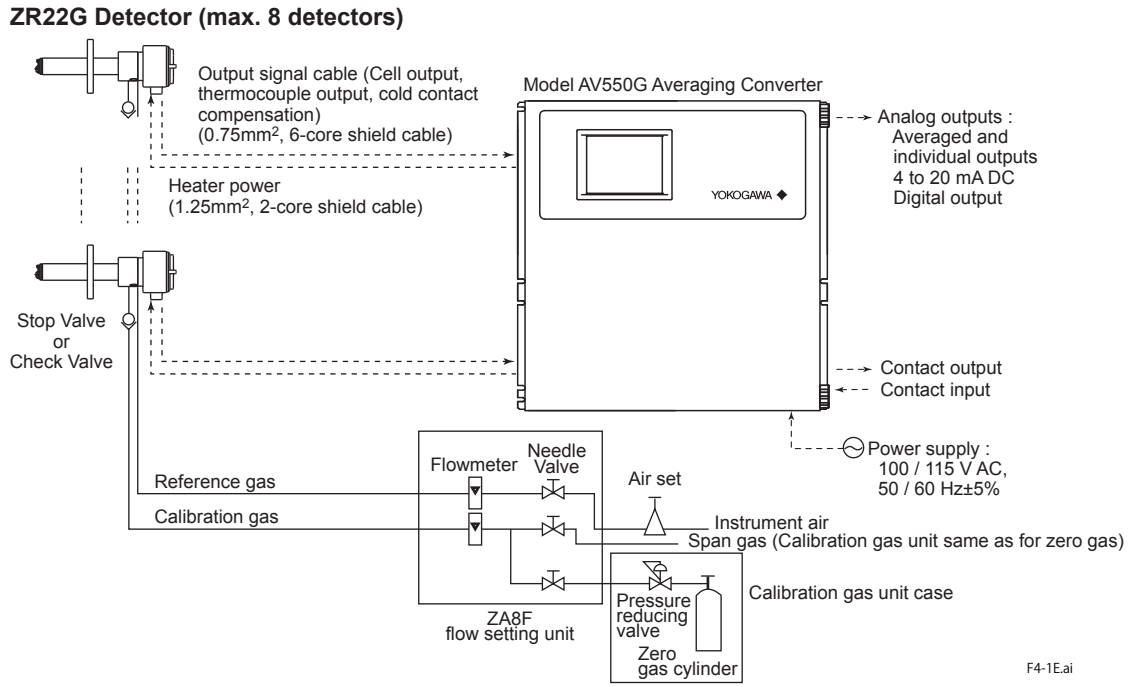

Figure 4.1 Typical Piping for System Using Flow Setting Units for Manual Calibration

The following outlines some points to note regarding the piping for this system.

- Install a stop valve or a check valve through a nipple on the calibration gas inlet of the detector.

CAUTION

The stop valve should be connected directly to the detector. If any piping is present between the detector and the stop valve, condensation may develop in the pipe, causing damage to the detector by rapid cooling when the calibration gas is introduced.

- When a high temperature detector is used and the pressure of a sample gas is negative, connect an ejector assembly on the sample gas outlet of the high temperature probe adapter. (See Figure 4.3 in Subsection 4.1.4.)
- When a high temperature detector is used and the pressure of a sample gas is 0.49 kPa or higher, it is recommended that a throttle (e.g., needle valve) be installed on the sample gas outlet of the high temperature probe adapter. (See Figure 4.4 in Subsection 4.1.4.)

CAUTION

This is to lower the temperature of a sample gas below 700°C. When both the temperature and the pressure of a sample gas are high, the temperature of the sample gas may not fall below 700°C before the gas reaches the detector. On the other hand, the temperature of a sample gas may drop too much and thus condensation develops in the high temperature probe adapter. During wintertime, it is recommended that the high temperature probe adapter be protected with an insulating material to prevent condensation.

- When a high temperature detector is used and blow back is required to eliminate dust accumulating in the probe of the high temperature probe adapter, air supply piping for purging should be installed.

CAUTION

If a sample gas contains much dust (e.g., in recovery boilers or cement kilns), the probe is more likely to become clogged. To eliminate this dust accumulation using air pressure, piping is generally installed from an air source only when cleaning is performed. Some cases, however, may need a permanent installation of the blow back piping. See Subsection 4.1.5 for the installation of blow back piping.

4.1.1 Parts Required for Piping in a System Using Flow Setting Units for Manual Calibration

Referring to Table 4.1, check that the parts required for your system are ready.

Table 4.1 Parts Required for Piping in a System Using Flow Setting Units for Manual Calibration

Detector	Piping Location	Parts Name	Remark	
General-purpose detector	Calibration gas inlet	Stop valve or Check valve	Yokogawa recommended: L9852CB/G7016XH or K9292DN/K9292DS	
		* Nipple	R1/4 or 1/4 NPT (male-male)	General parts
		Tube fitting	R1/4 (or 1/4 NPT) for a Ø6 × Ø4 mm soft tube	General parts
	Reference gas inlet	Air set	Yokogawa recommended: G7003XF/K9473XK or G7004XF/K9473XG	
		Connection fitting	R1/4 or 1/4 NPT (male)	General parts
High temperature detector (0.15 m)	Calibration gas inlet	Stop valve or Check valve	Yokogawa recommended: L9852CB/G7016XH or K9292DN/K9292DS	
		* Nipple	R1/4 or 1/4 NPT (male-male)	General parts
		Tube fitting	R1/4 (or 1/4 NPT) for a Ø6 × Ø4 mm soft tube	General parts
	Reference gas inlet	Air set	Yokogawa recommended: G7003XF/K9473XK or G7004XF/K9473XG	
		Connection fitting	R1/4 or 1/4 NPT (male)	General parts
	Sample gas outlet	* Auxiliary ejector assembly	Yokogawa recommended: E7046EC or E7046EN	
		* Equal tee, connection fitting	Rc1/4 or 1/4 NPT (female)	General parts
		* Needle valve	Rc1/4 or 1/4 NPT	General parts
		* Reducing nipple	R1/2 to R1/4 or R1/2 to 1/4 NPT	General parts

Note: Parts marked with an asterisk (*) are used when required. General parts can be found on the local market.

4.1.2 Piping for the Calibration Gas Inlet

This piping is to be installed between the zero gas cylinder and the ZA8F flow setting unit, and between the ZA8F flow setting unit and the ZR22G detector.

The cylinder should be placed in a calibration gas unit case or the like to avoid any direct sunlight or radiant heat so that the gas cylinder temperature does not exceed 40°C. Mount a regulator valve (specified by Yokogawa) on the cylinder.

Mount a check valve or stop valve (specified by Yokogawa) on the nipple (found on the local market) at the calibration gas inlet of the detector as illustrated in Figure 4.2.
(The check valve or the stop valve may have been mounted on the detector when shipped.)

Connect the flow setting unit and the detector to a stainless steel pipe 6 mm (O.D.) x 4 mm or larger (I.D.) (or nominal size 1/4 inch).

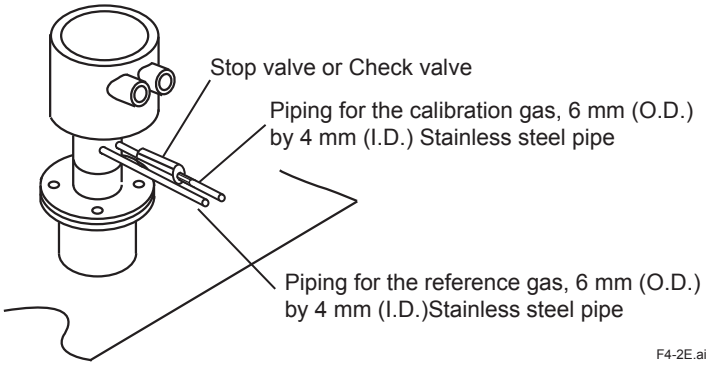

Figure 4.2 Piping for the calibration gas inlet

4.1.3 Piping for the Reference Gas Inlet

Reference gas piping is required between the air source (instrument air) and the ZA8F flow setting unit, and between the ZA8F flow setting unit and the ZR22G detector.

Insert the air set next to the flow setting unit in the piping between the air source and the flow setting unit.

Use a 6 mm (O.D.) x 4 mm or larger (I.D.) (or nominal size 1/4 inch) stainless steel pipe between the flow setting unit and the detector.

4.1.4 Piping to the High Temperature Probe Adapter

A sample gas should be at a temperature below 700°C before it reaches the detector. Also, a sample gas needs to be sucked if its pressure is negative. The piping for these purposes should be connected to the high temperature probe adapter. For the use of the high temperature probe adapter when the high temperature detector is used, refer to Subsection 3.2.2.

- If the pressure of a sample gas is negative, connect an ejector assembly (E7046EC/ E7046EN) as shown in Figure 4.3. Mount the pressure gauge as close as possible to the ejector. However, if the ambient temperature is too high, mount the gauge in a location with a temperature below 40°C.

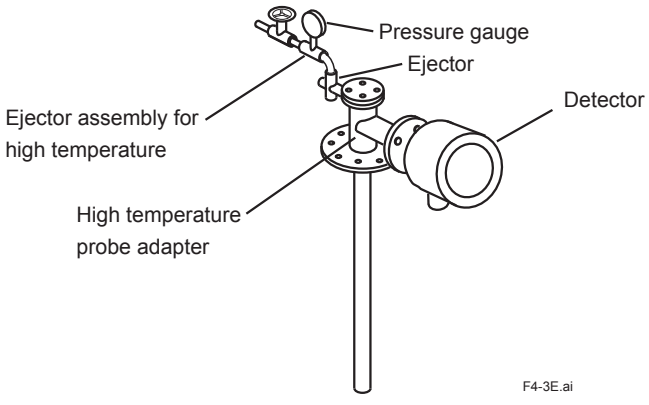

Figure 4.3 Mounting the ejector assembly

• If the temperature of a sample gas is high and its pressure exceeds 0.49 kPa, the temperature of the sample gas at the detector may not be below 700°C. In this case, connect a needle valve (found on the local market) through a nipple (found on the local market) to the sample gas outlet (Rc1/2) of the probe adapter so that the sample gas exhaust volume can be restricted. In cases where condensation is likely to occur in the probe adapter when the sample gas is cooled, protect the probe adapter with an insulating material as shown in Figure 4.5.

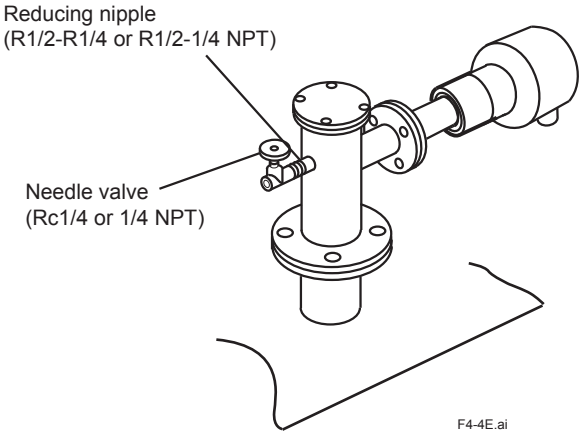

Figure 4.4 Mounting the needle valve for restricting exhaust flow of the sample gas

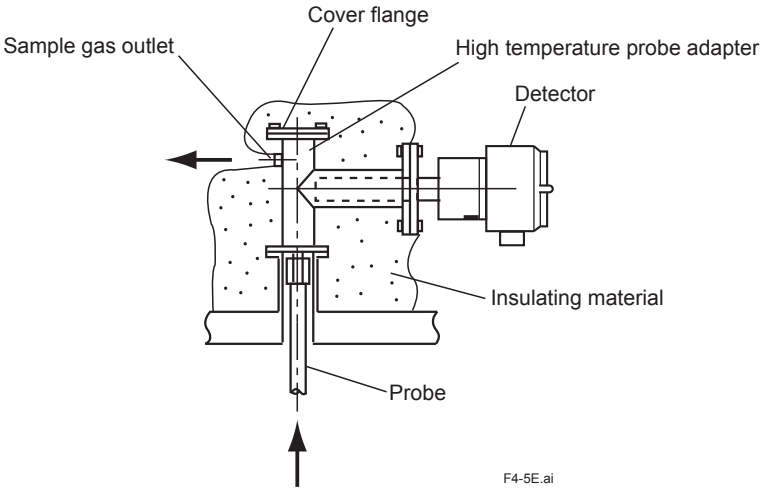

Figure 4.5 Preventing to condensation

4.1.5 Piping for Blow back

This piping is required when the blow back function is carried out. The piping described below provides automatic blow back operation when the " blow back start " command is entered to the converter.

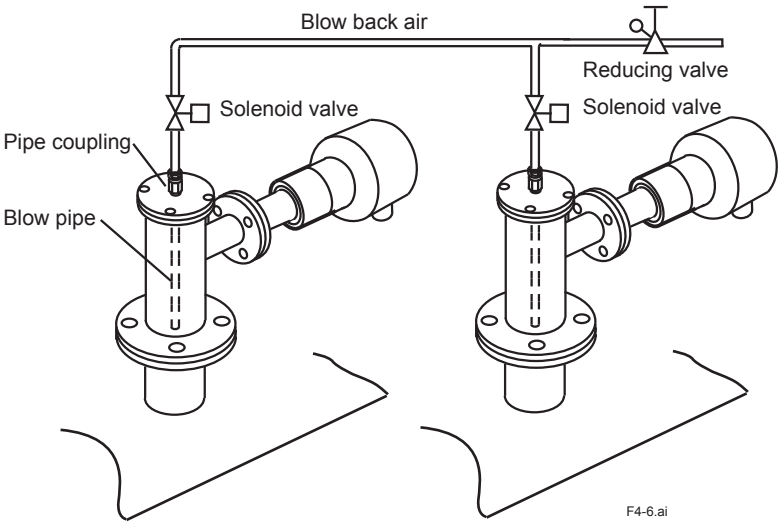

Note

If blow back is done under control of a contact output from the averaging converter, a hold is placed on analog output signals from all detector while blow back is in progress. See Section 10.5 for details on the blow back function. Wiring for solenoid valves is described in Section 5.3.

Figure 4.6 Blow back Piping

The following parts are required for blow back piping.

- Blow pipe (to be prepared as illustrated in Figure 4.7.)
- Two-way solenoid valve: " Open " when electric current is on. (Found on the local market)
- Air set (Yokogawa recommended: G7003XF / K9473XK or G7004XF / K9473XG)

<Blow pipe manufacturing>

Manufacture the blow pipe as illustrated in Figure 4.7, and mount it on the high temperature probe adapter.

Unit : mm

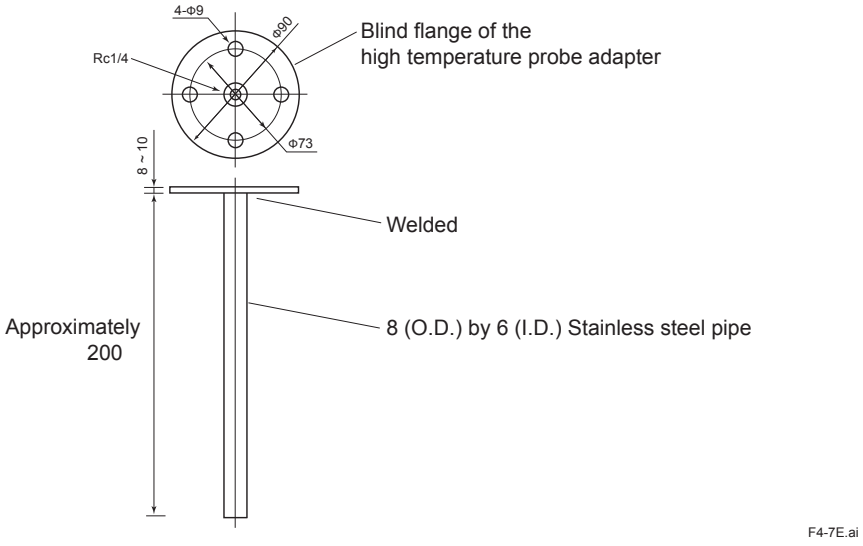

Figure 4.7 Blow pipe Construction

4.1.6 Piping for Indication check

To perform an indication check using the third check gas, the piping to allow the third gas to flow into the calibration gas line is required for the ZA8F Flow Setting Unit in addition to the system configuration shown in Figure 4.1.

Connect the piping from the third check gas cylinder through a pressure reducing valve and a stop valve, along with the span gas line, to the zero gas inlet of the ZA8F Flow Setting Unit. To perform an indication check, open the stop valve on the line from the third check gas cylinder, while open the stop valve on the span gas line to perform span calibration.

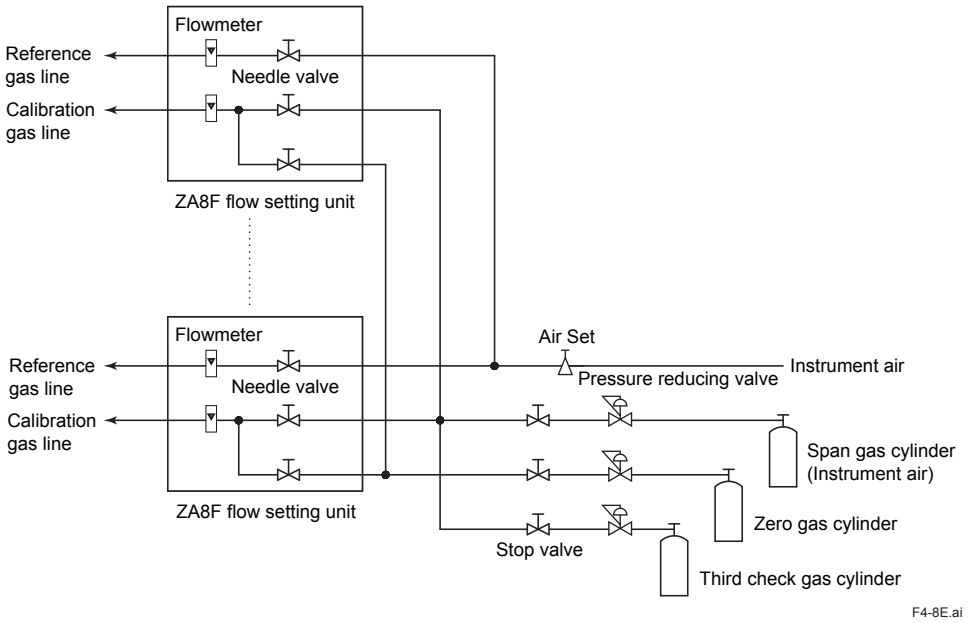

Figure 4.8 Piping to ZA8F Flow Setting Unit for Indication Check Using 3rd Check Gas

4.1.7 Piping to Introduce Purge Gas When a Process Gas Alarm Occurs

When a process gas alarm (an input contact signal of unburnt gas detection) occurs, the averaging converter will cut off the power supply to the heater of the detector, and at the same time it will send a contact output to activate a solenoid valve for introducing a purge gas to the detector.

In addition to the system configuration shown in Figure 4.1, a purge gas cylinder and a pressure reducing valve, and where necessary, a stop valve, a flowmeter, and a needle valve are required. Also, a check valve should be installed on the calibration gas inlet of the detector. A typical piping diagram for purging is shown in Figure 4.9.

It is recommended that each instrument be installed to allow for minimum piping between the ZA8F Flow Setting Unit and the detector and between the solenoid valve for introducing the purge gas and the detector.

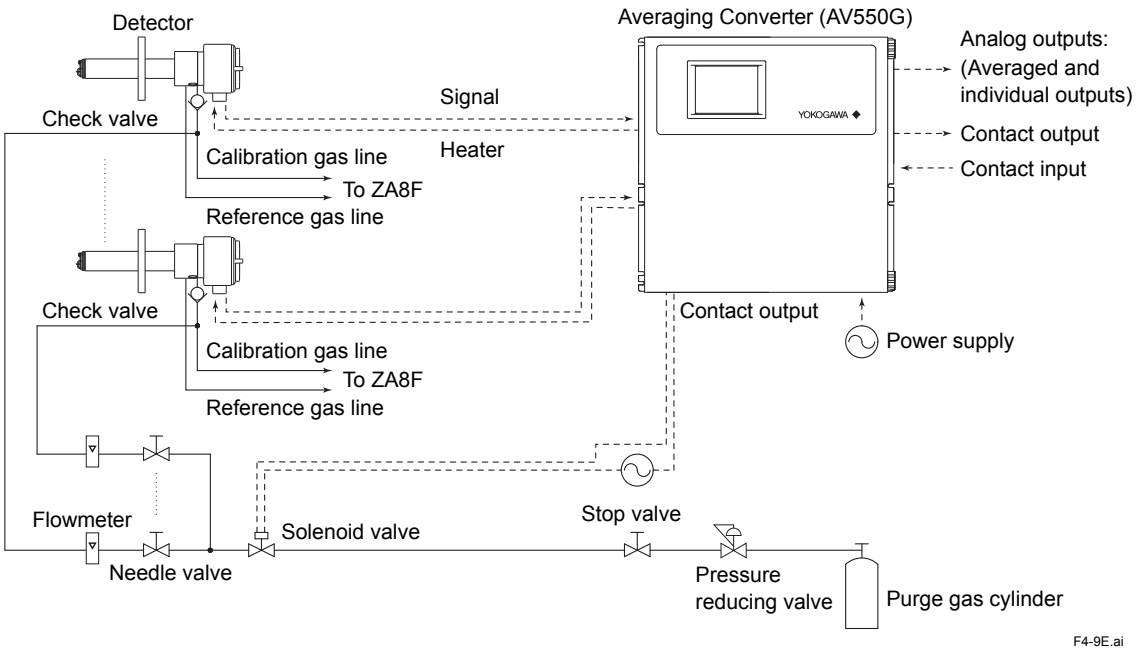

Figure 4.9 Typical Piping for Purging

4.2 Piping for a System to Perform Automatic Calibration

The piping for a system to perform automatic calibration is shown in Figure 4.10.

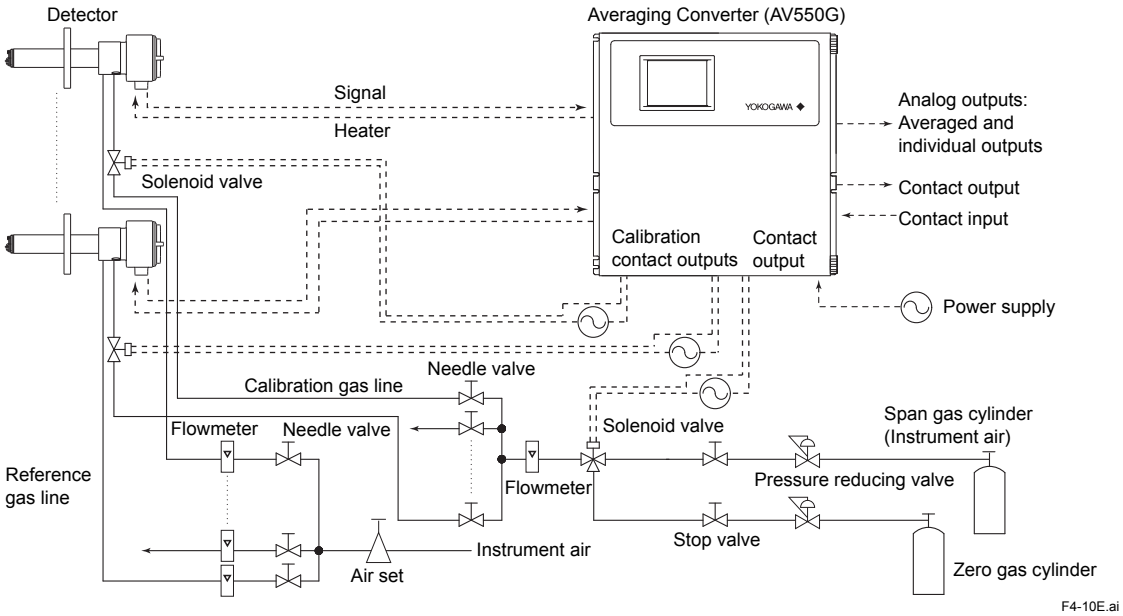

Figure 4.10 Typical Piping for a System to perform Automatic Calibration

The following outlines some points to note regarding the piping for this system.

- Install a solenoid valve through a nipple on the calibration gas inlet of the detector.

CAUTION

The solenoid valve should be connected directly to the detector. If any piping is present between the detector and the solenoid valve, condensation may develop in the pipe, causing damage to the detector by rapid cooling when the calibration gas is introduced.

- When a high temperature detector is used and the pressure of a sample gas is negative, connect an ejector assembly on the sample gas outlet of the high temperature probe adapter. (See Figure 4.3 in Subsection 4.1.4.)
- When a high temperature detector is used and the pressure of a sample gas is 0.49 kPa or higher, it is recommended that a throttle (e.g., needle valve) be installed on the sample gas outlet of the high temperature probe adapter. (See Figure 4.4 in Subsection 4.1.4.)

CAUTION

- This is to lower the temperature of a sample gas below 700°C. When both the temperature and the pressure of a sample gas are high, the temperature of the sample gas may not fall below 700°C before the gas reaches the detector. On the other hand, the temperature of a sample gas may drop too much and thus condensation develops in the high temperature probe adapter. During wintertime, it is recommended that the high temperature probe adapter be protected with an insulating material to prevent condensation.
- If optional 24 V outputs are specified for solenoid valves (Option Code “/24”), no external power supply for solenoid valve is required. The solenoid valves are powered from the AV550G Averaging Converter. Never connect external power sources in the wiring for solenoid valves.

- When a high temperature detector is used and blow back is required to eliminate dust accumulating in the probe of the high temperature probe adapter, air supply piping for purging should be installed.

CAUTION

If a sample gas contains much dust (e.g., in recovery boilers or cement kilns), the probe is more likely to become clogged. To eliminate this dust accumulation using air pressure, piping is generally installed from an air source only when cleaning is performed. Some cases, however, may need a permanent installation of the blow back piping. See Subsection 4.1.5 for the installation of blow back piping.

4.2.1 Parts Required for Piping in a System to Perform Automatic Calibration

Referring to Table 4.2, check that the parts required for your system are ready.

Table 4.2 Parts Required for Piping in a System to Perform Automatic Calibration

Detector	Piping Location	Parts Name	Description	
General-purpose detector	Calibration gas inlet	Solenoid valve	Yokogawa recommended: E7057GS, E7057GT, E7057GR, G7001XP, G7002XP, G7003XP	
		* Nipple	R1/4 or 1/4 NPT (male-male)	General parts
		Flowmeter	0 to 1 L /min	General parts
		Needle valve	For flow control	General parts
		Tee fitting	For branch connection. Manifold substitutable	General parts
		Solenoid value	3-way valve for zero/span gas switching	General parts
		* Check valve	Yokogawa recommended: K9292DN, K9292DS	
		* Stop valve	—	General parts
		Zero gas cylinder	Yokogawa recommended: G7001ZC	
		Pressure reducing valve	Yokogawa recommended: G7013XF or G7014XF	
		Connection fitting	R1/4 or 1/4 NPT (male)	General parts
	Reference gas inlet	Flowmeter	0 to 1 L /min	General parts
		* Needle valve	For flow control. Unnecessary if supplied with flowmeter	General parts
		Air set	Yokogawa recommended: G7003XF/K9473XK or G7004XF/K9473XG	
		Connection fitting	R1/4 or 1/4 NPT (male)	General parts
High temperature detector (0.15 m)	Calibration gas inlet	Solenoid valve	Yokogawa recommended: E7057GS, E7057GT, E7057GR, G7001XP, G7002XP, G7003XP	
		* Nipple	R1/4 or 1/4 NPT (male-male)	General parts
		Flowmeter	0 to 1 L /min	General parts
		Needle valve	For flow control	General parts
		Tee fitting	For branch connection. Manifold substitutable	General parts
		Solenoid valve	3-way valve for zero/span gas switching	General parts
		* Check valve	Yokogawa recommended: K9292DN, K9292DS	
		* Stop valve	—	General parts
		Zero gas cylinder	Yokogawa recommended: G7001ZC	
		Pressure reducing valve	Yokogawa recommended: G7013XF or G7014XF	
		Connection fitting	R1/4 or 1/4 NPT (male)	General parts
	Reference gas inlet	Flowmeter	0 to 1 L /min	General parts
		* Needle valve	For flow control. Unnecessary if supplied with flowmeter	General parts
		Air set	Yokogawa recommended: G7003XF/K9473XK or G7004XF/K9473XG	
		Connection fitting	R1/4 or 1/4 NPT (male)	General parts
	Sample gas outlet	* Ejector assembly	Yokogawa recommended: E7046EC or E7046EN	
		* Equal tee, connection fitting	Rc1/4 or 1/4 NPT (female)	General parts
		* Needle valve	Rc1/4 or 1/4 NPT	General parts
		* Reducing nipple	R1/2-R1/4 or R1/2-1/4 NPT	General parts

Note: Parts marked with an asterisk (*) are used when required. General parts can be found on the local market.

4.2.2 Piping for the Calibration Gases

The piping for the calibration gases should be installed between the calibration gas cylinders (or instrument air source) and the detectors with a flowmeter, solenoid valves, needle valves, and stop valves for performing automatic calibration.

- Place the calibration gas cylinders in a place not exposed to direct sunlight as much as possible, e.g., house in a gas unit case. The cylinder should be equipped with a pressure reducing valve (Yokogawa recommended part) and where necessary, a stop valve.
- Install a normally closed solenoid valve (Yokogawa recommended part) through a nipple (found on the local market) on the calibration gas inlet of the detector as shown in Figure 4.11. This solenoid valve is activated by a contact signal from the averaging converter. (Power wiring is separately required.)

CAUTION

If the solenoid valve cannot be connected directly to the calibration gas inlet of the detector, install a dedicated check valve (K9292DN or K9292DS) on the inlet and then route the piping to the solenoid valve.

- After installing the solenoid valve on the calibration gas inlet of the detector, route the piping through a needle valve, a flowmeter, a solenoid valve for switching zero and span gases, a stop valve, and a pressure reducing valve for the cylinder, in this order, to the cylinder.
- Install the piping for the solenoid valve for switching zero and span gases so that the zero gas is introduced to the detector when powered. This solenoid valve is activated by a contact signal from the averaging converter. (Power wiring is separately required.)
- Install the needle valve and flowmeter in close proximity as much as possible.
- Use stainless steel pipes with 6 OD x 4 ID mm (or nominal 1/4 inch) or larger inside diameter for the piping for the calibration gases.

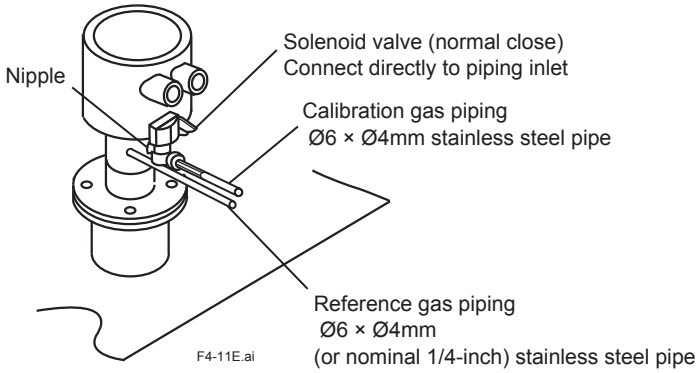

Figure 4.11 Piping for the Calibration Gas Inlet

4.2.3 Piping for the Reference Gas

The piping for the reference gas should be installed between the air source (instrument air) and the detector through flowmeters, needle valves and an air set for flow control of the reference gas.

- Install the piping from the reference gas inlet of the detector to the air source with a flow meter, a needle valve where necessary, and an air set in this order.
- Install the flowmeter, needle valve and air set in close proximity.
- Use stainless steel pipes with 6 OD x 4 ID mm (or nominal 1/4 inch) or larger inside diameter for the piping for the reference gas.

4.2.4 Piping to the High Temperature Probe Adapter

The piping to the high temperature probe adapter is required when a high temperature detector is used.

This piping is the same as the one in the system using flow setting units for manual calibration. See Subsection 4.1.4.

4.2.5 Piping for Blow back

The piping for blow back is required only when the blow back is conducted in a system using a high temperature detector. This piping is the same as the one in the system using flow setting units for manual calibration. See Subsection 4.1.5.

4.2.6 Piping for Indication Check

To perform an indication check using the third check gas, the piping to allow the third gas to flow into the calibration gas line is required in addition to the system configuration shown in Figure 4.10.

Route the piping from the third check gas cylinder through a pressure reducing valve and a stop valve to the solenoid valve for switching the span gas and the third check gas, as shown in Figure 4.12.

It is recommended that the piping and wiring for the solenoid valve for switching the span gas and the third check gas be installed to allow the third check gas to be introduced when powered. This solenoid valve is activated by a contact signal from the averaging converter (Power wiring is separately required.)

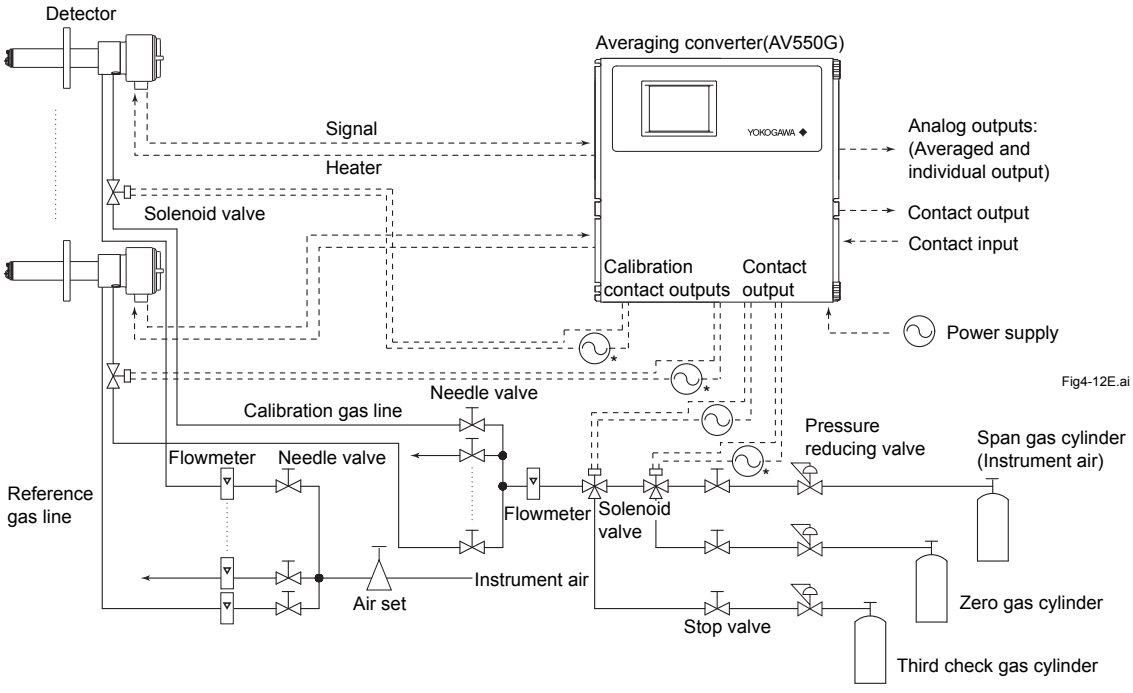

*: If optional 24 V outputs are specified for solenoid valve (MS Code "/24"), no external power supply for solenoid valves is required. The solenoid valves are powered from the AV550G Averaging Converter. Never connect external power sources in the wiring for solenoid valves.

Figure 4.12 Piping for Automatic Indication Check Using 3rd Check Gas

4.2.7 Piping to Introduce Purge Gas When a Process Gas Alarm Occurs

When a process gas alarm (an input contact signal of unburnt gas detection) occurs, the averaging converter will cut off the power supply to the heater of the detector, and at the same time it will send a contact output to activate a solenoid valve for introducing a purge gas to the detector.

The piping for purging in a system to perform automatic calibration is the same as the one in the system using flow setting units for manual calibration. As instructed in Subsection 4.1.7, this piping also requires that a check valve be installed on the calibration gas inlet of the detector. A typical piping diagram for purging is shown in Figure 4.13.

It is recommended that each instrument be installed to allow for minimum piping between the solenoid valve for introducing the calibration gases and the check valve, and between the solenoid valve for introducing the purge gas and the check valve.

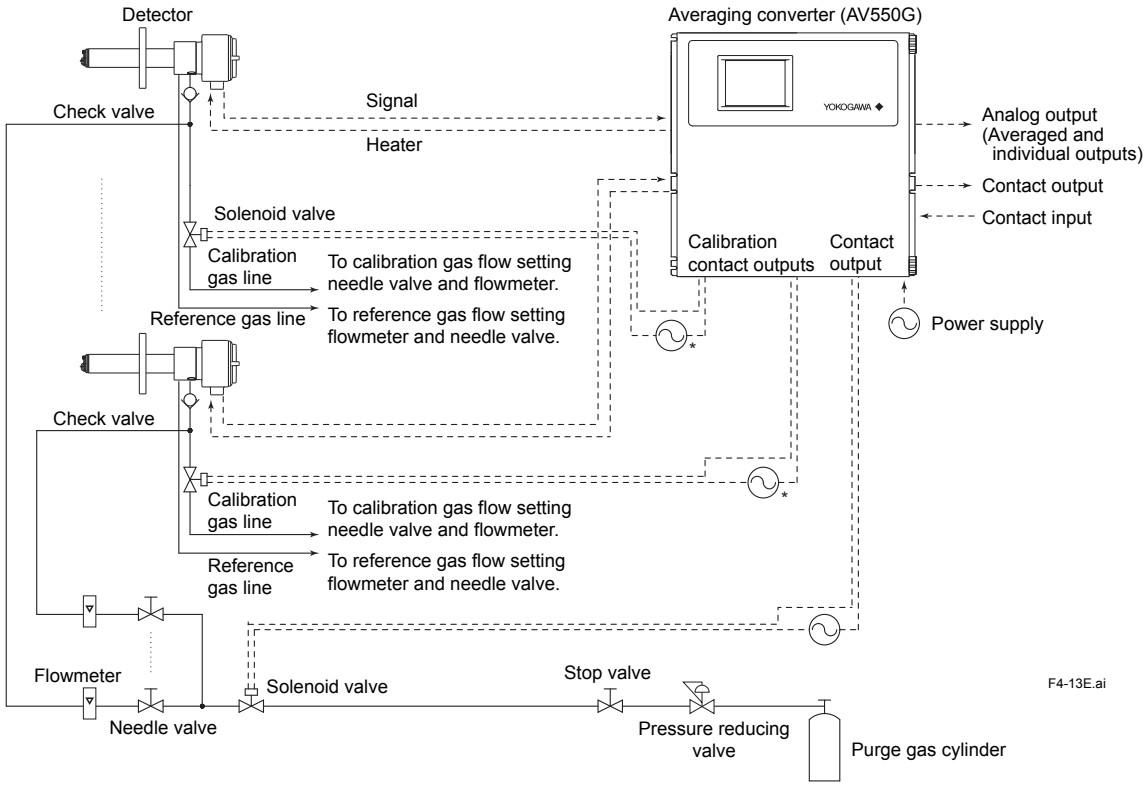

* : If optional 24 V outputs are specified for solenoid valve (MS Code "/24"), no external power supply for solenoid valves is required. The solenoid valves are powered from the AV550G Averaging Converter. Never connect external power sources in the wiring for solenoid valves.

Figure 4.13 Typical Piping for Purging

Blank Page

5. Wiring

This chapter describes the wiring connections to the AV550G Averaging Converter.

5.1 General

WARNING

Never apply power to the averaging converter and other instruments connected to the averaging converter until all wiring is completed.

CAUTION

This product complies with the CE marking. Where compliance with the CE marking is necessary, the following wiring is required.

1. Install an external switch or circuit breaker to the power supply of the averaging converter.
2. Use an external switch or circuit breaker rated 20A and conforming to IEC 947-1 or IEC 947-3.
3. It is recommended that the external switch or circuit breaker be installed in the same room as the averaging converter.
4. The external switch or circuit breaker should be installed within reach of the operator and identified with marking as a power supply switch to the averaging converter.
5. Power lines such as power cables and heater wires should be fixed securely onto a wall or construction using cable racks, conduit tubing, nylon bands or other appropriate ways. Accidental removal from terminals by pulling may result in electric shock.

5.1.1 Wiring Precautions

Precautions Concerning the Correspondence Between Detectors and Channel Cards

Multiple detectors are connected to the averaging converter. Make sure that the wiring is run properly between the detector and its corresponding channel card on the averaging converter. Special care should be exercised so that the channel number of the detector signal line from the channel card corresponds the one of the detector heater line from the power supply unit. Disagreement may result in malfunction of the detector as well as invalid operation. (A channel number is indicated in the channel card slot.)

The specified number of channel cards per purchase order is factory installed in channels in order from CH1. The factory-installed channels can be changed as desired. All the channels are the same. Note that in a 4-channel base averaging converter (AV550G-A-), channels CH5 to CH8 cannot be used.

To remove a channel card, loosen the 2 screws attached to the top and bottom of the card, and then while holding the loosened screws, pull straight away from the slot. To install a channel card, insert the card by sliding along the guide rail in the slot, and then securely tighten the 2 screws.

WARNING

Cables that withstand temperatures of at least 80°C should be used for wiring.

CAUTION

Using a channel card installed without 2 screws tightened, may result in poor resistance to noise.

Precautions in Processing Shields

When a shielded cable is required for wiring, follow the instructions below to process the shield.

(1) All the shields should be connected on the averaging converter side: Connect to the cable shield ground terminals inside the averaging converter.

(2) The shields should not be connected on the other side of the cable. To avoid any possible contact with housings of instruments connected or metal parts, conductors of the shields should be processed using insulating tapes or in an appropriate way.

(3) The shields should be connected to the cable shield ground terminals immediately after the cable is inserted into the averaging converter through the wiring hole.
Having a long distance between the wiring hole and the cable end where the shield goes out, may result in poor resistance to noise.

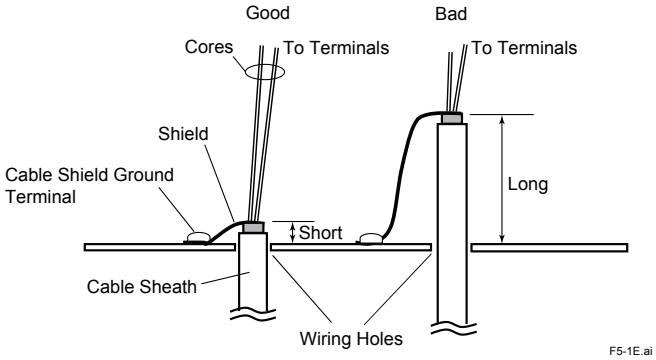

Figure 5.1 Shield Processing

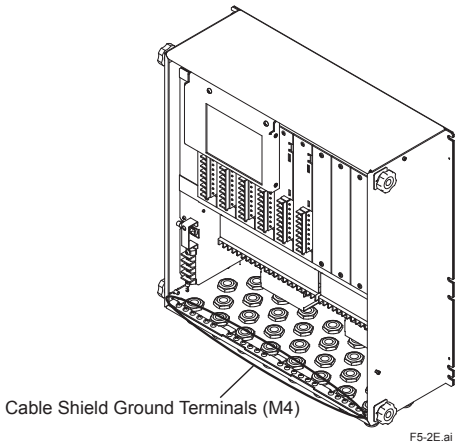

Figure 5.2 Cable Shield Ground Terminals

5.1.2 Wiring Holes

The averaging converter has 30 wiring holes. Use holes near the rear for power wiring (e.g., power cables, detector heater wires, and wiring for solenoid valve contacts and other contact outputs). For signal wiring (e.g., detector signal lines and analog output signal lines), use holes near the front.

If more than 30 cables are used and thus more than one cable has to be passed through one wiring hole, do not allow signal lines and power lines to pass the same hole. Also, in the averaging converter, the signal lines and power lines should be routed so they can avoid contact and interference.

A grommet is attached, as standard, to the wiring hole of the averaging converter. An optional cable gland is available. When a cable gland is not used, make a cable hole in a grommet.

Wiring Connections: 30 holes

Applicable Cable Hole: Ø17 mm maximum for grommet

Ø6 to Ø12 mm for cable gland (optional)

5.1.3 External Wiring Connection Terminals of the Averaging Converter

The connection diagram of the averaging converter is shown in Figure 5.3.
The terminal numbers are indicated on the converter. Care should be taken to make the wiring connections correctly.

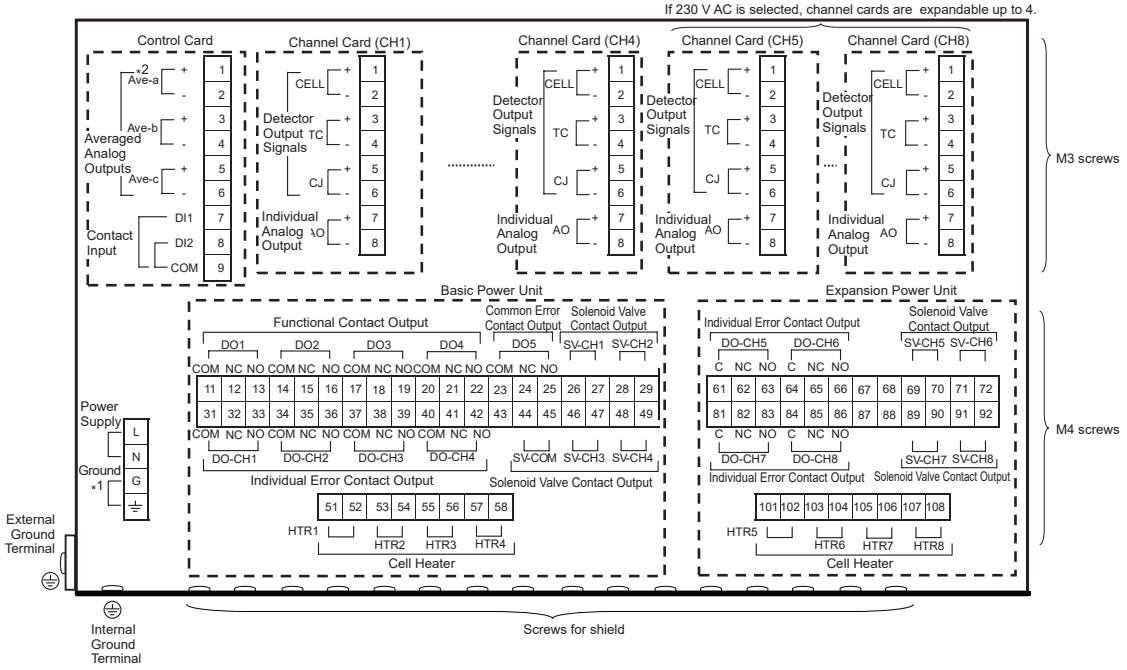

Figure 5.3 External Wiring Connection Terminals of the Averaging Converter

*1: G terminal and ⏚ terminal are connected by jumper plate.
*2: Averaged analog output with digital communication (HART) when suffix code "-E" (HART communication) is selected.

5.1.4 Types of Wiring and Cables

Types of wiring and cables to be used are listed in Table 5.1. The purpose of a shield is not only to prevent the effect from noise disturbance but also to restrict the noise emitted from the converter. Specified cables must be used.

Table 5.1 Types of Wiring and Cables

Terminal	Indication	Shield Requirement	Number of Cores	Requirement
Power, Internal grounding	L, N, ⏚	Unshielded	2 or 3	Size: 2 mm^2 (14 AWG) or larger per core
External ground terminal	⏚	Unshielded	—	Either internal grounding or external grounding will do.
Cell heater	HTR1 to HTR8	Shielded	2	Size: 1.25 mm^2 (16 AWG) or larger, Conductor two-way resistance: 10 Ω or less
Detector output signal	CELL, TC, CJ	Shielded	6	Conductor two-way resistance: 10 Ω or less
Individual analog output	AO	Shielded	2	550 Ω or less, including load resistance
Averaged analog output	Ave-a, Ave-b, Ave-c	Shielded	Note	
Solenoid valve contact output	SV-COM, SV-CH1 to SV-CH8	Shielded	Note	—
Individual error contact output	DO-CH1 to DO-CH8	Unshielded	Note	—
Functional contact output	DO1 to DO4	Unshielded	Note	—
Common error contact output	DO5	Unshielded	Note	—
Contact input	DI1, DI2, COM	Unshielded	2 or 3	Loop resistance when contact is closed: 200 Ω or less

Note: The number of cores is determined by number of outputs to be used.

5.2 Wiring for the Averaging Converter and Peripheral Devices

5.2.1 Preparation for Wiring to the Averaging Converter

Follow the instructions below when connecting cables to the averaging converter.

(1) The terminal screws on the control and channel cards are M3.5, and all the other terminal screws are M4. Each wire should be terminated with a crimp terminal appropriate to the screw.

(2) If a silicone rubber insulated glass fiber braided wire is used for wiring to the detector, run the wiring through a terminal box. It is recommended that a cable that withstand temperatures of at least 80°C be used between the terminal box and the averaging converter. This is to prevent moisture or corrosive gases from entering into the averaging converter and to ensure the grounding of the detector.

5.2.2 Preparation for Wiring to Detectors

Follow the instructions below when connecting cables to detectors.

(1) Install a conduit or cable gland appropriate to the specified screw size to the cable inlet of a detector. Allow for the sufficient length of a cable in case that the detector needs to be removed for maintenance.

(2) If the ambient temperature around the wiring lines exceeds 75°C, a flexible metal conduit tube must be used. If an unshielded 600 V silicon rubber insulated glass fiber braided wire is used, keep the wire away from noise sources to avoid noise interference.

(3) Figure 5.4 shows the layout of the detector terminals.

The sizes of the terminal screws are M3.5. Each wire should be terminated with a crimp terminal appropriate to the screw.

If the ambient temperature at the detector installation site exceeds 60°C, use a “burl crimp-on terminal”.

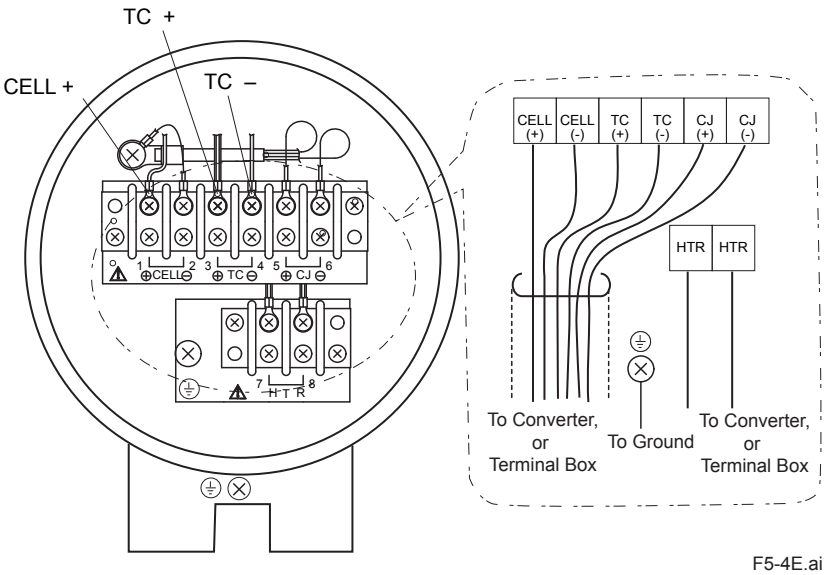

Figure 5.4 Detector Terminals

Notice when closing the cover of the detector.

CAUTION

- Before opening the detector cover, loosen the lock screw. If the screw is not loosened first, the screw will damage the cover, and the terminal box will require replacement.
  When opening and closing the cover, remove any sand particles or dust to avoid gouging the thread.
- After screwing the cover in the detector body, secure it with the lock screw.

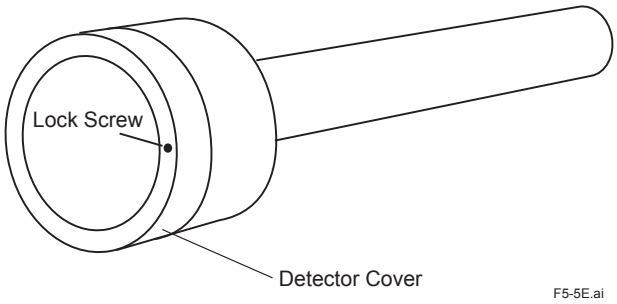

Figure 5.5

5.2.3 Power and Ground Wiring

Connect the power wiring to the L and N terminals in the averaging converter. Use wires with a size of 2 mm^2 (14 AWG) or larger. If a cable gland is not installed on the wiring hole of the averaging converter, use a wire with an outside diameter of 17 mm or smaller. If installed, use a wire with an outside diameter of 6 to 12 mm. A lock washer must be installed.

Connect the ground wiring to the protective ground terminal in the averaging converter or the external ground terminal on the side of the case. Run the ground wiring so the ground resistance is 100 Ω or less (equivalent to Class D grounding).

Make sure that the jumper plate is connected between the G terminal and the functional ground terminal.

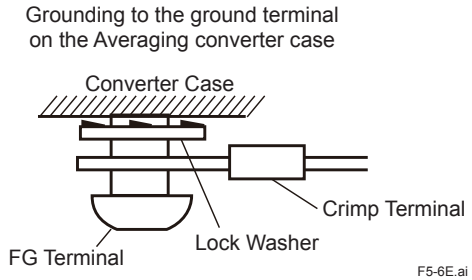

Figure 5.6 Grounding to the Ground Terminal

CAUTION

Operating the instrument with the jumper plate disconnected may result in poor resistance to noise.

5.2.4 Power Wiring to Detector Heaters

This wiring provides electric power from the averaging converter to the heater for heating the sensor in a detector. Use 2-core shielded cables that withstand temperatures of at least 80°C. The wire size should be 1.25 mm^2 (16 AWG) or larger and the conductor two-way resistance should be 10 Ω or less. If a cable gland is not installed on the wiring hole of the averaging converter, use a wire with an outside diameter of 17 mm or smaller. If installed, use a wire with an outside diameter of 6 to 12 mm. The shields should be connected to cable shield ground terminals on the case of the averaging converter.

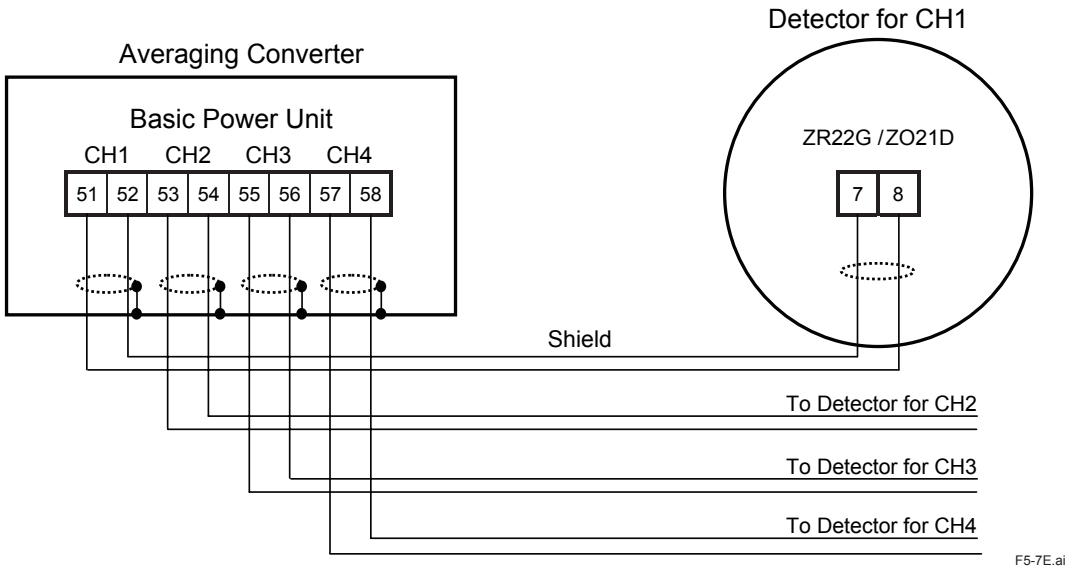

Figure 5.7 Power Wiring to Detector Heaters

If the ambient temperature at the detector installation site exceeds 75°C, install a terminal box and connect to the detector using 600 V silicon rubber insulated glass braided wires. The distance between the detector and the terminal box should be minimized.

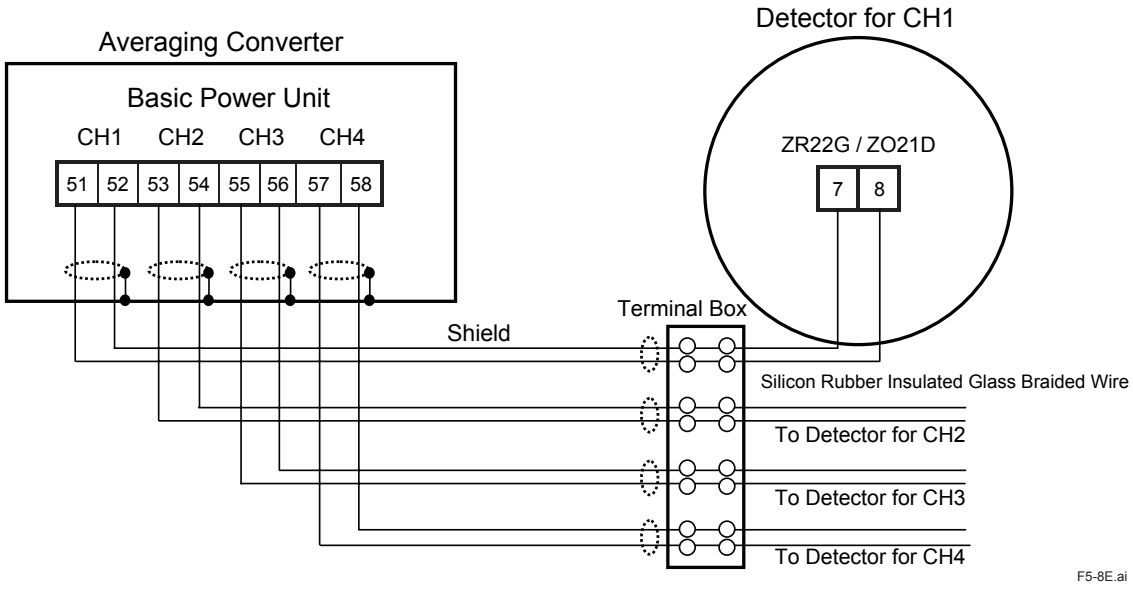

Figure 5.8 Power Wiring to Detector Heaters (Using Terminal Box)

5.2.5 Signal Wiring to Detectors

This wiring is for transmitting signals of cell electromotive force, thermocouple output and cold junction compensation from a detector to the averaging converter. Use 6-core shielded cables that withstand temperatures of at least 80°C. The conductor two-way resistance should be 10 Ω or less. Keep the cables away from the power wiring. If a cable gland is not installed on the wiring hole of the averaging converter, use a wire with an outside diameter of 17 mm or smaller. If installed, use a wire with an outside diameter of 6 to 12 mm. The shields should be connected to cable shield ground terminals on the case of the averaging converter.

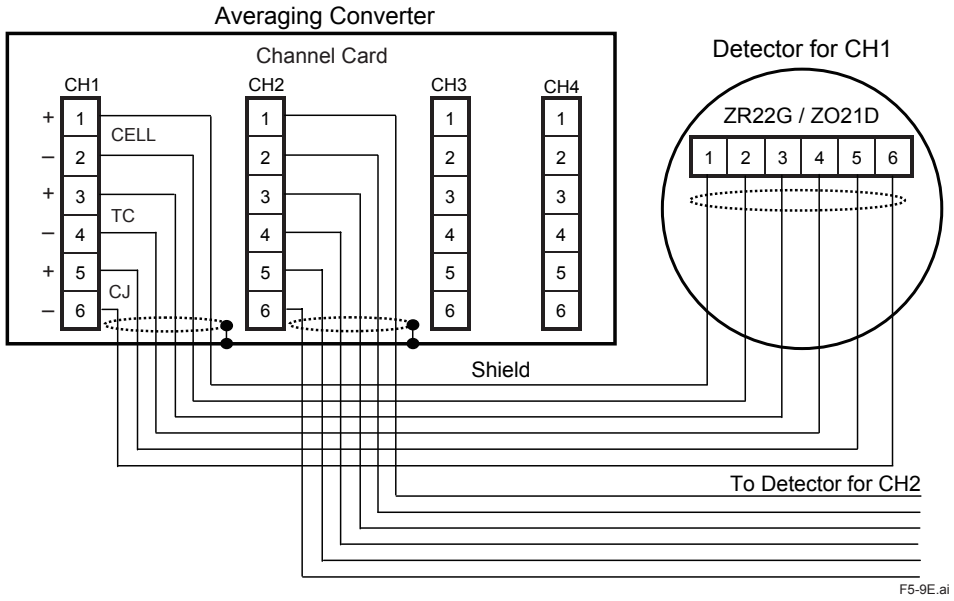

Figure 5.9 Signal Wiring to Detectors

If the ambient temperature at the detector installation site exceeds 75°C, install a terminal box and connect to the detector using 600 V silicon rubber insulated glass braided wires. The distance between the detector and the terminal box should be minimized.

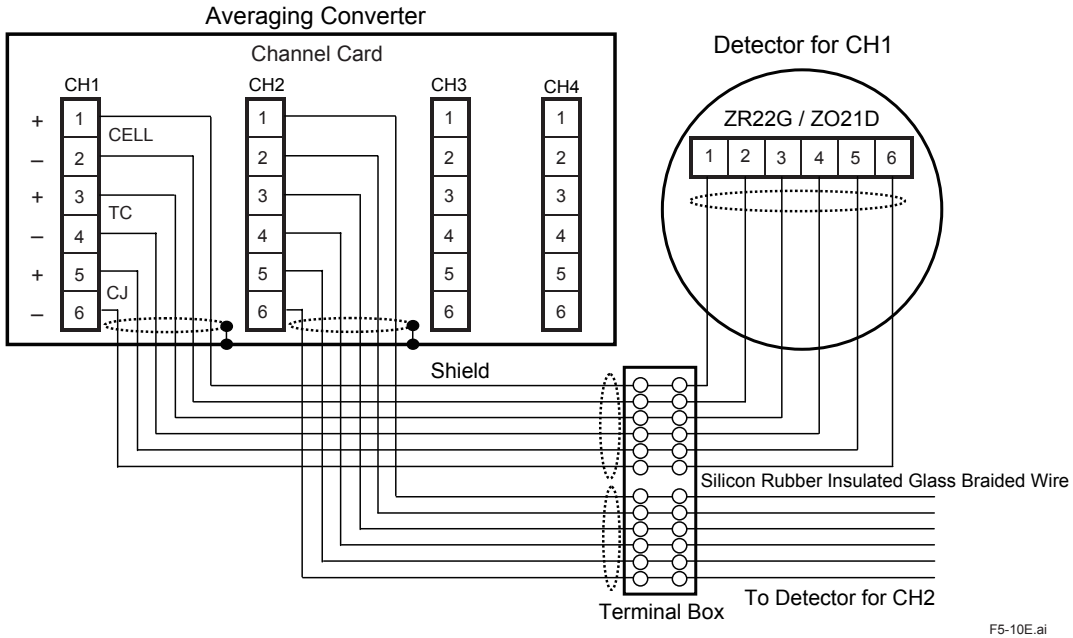

Figure 5.10 Signal Wiring to Detectors (Using Terminal Box)

5.2.6 Ground Wiring of Detectors

Connect the ground wiring to the external ground terminal on the detector case or the internal ground terminal. Follow the instructions below. The ground terminal screw is M4.

(1) The ground resistance should be 100 Ω or less (equivalent to Class D grounding).

(2) If the ambient temperature of the wiring installation exceeds 75°C, use appropriate heat resistant wires.

CAUTION

The flange bolts alone do not provide durable grounding of the detector. Be sure to grounded the ground terminal.

5.2.7 Wiring for Individual and Average Concentration Analog Outputs

For the signal wiring to analog outputs, use shielded cables that withstand temperatures of at least 80°C. The number of cores is determined by the number of outputs. If a cable gland is not installed on the wiring hole of the averaging converter, use a wire with an outside diameter of 17 mm or smaller. If installed, use a wire with an outside diameter of 6 to 12 mm. Like the signal wiring to detectors, the shields should be connected to cable shield ground terminals on the case of the averaging converter.

The load resistance from the averaging converter, including the wiring resistance, should be 550 Ω or less.

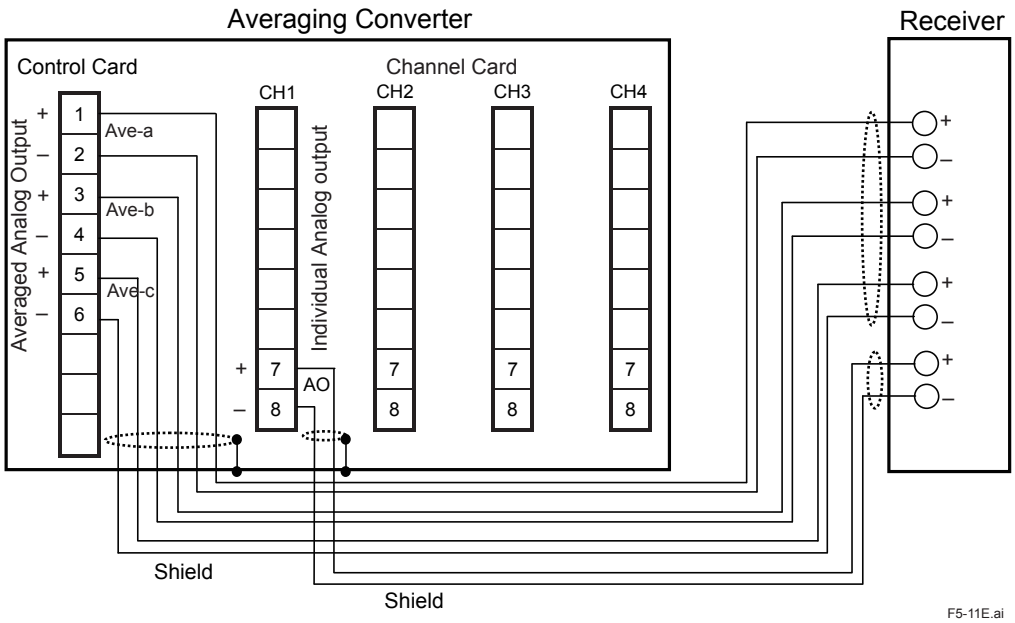

Figure 5.11 Wiring for Individual and Average Concentration Analog Outputs

5.2.8 Wiring for Solenoid Valve for Automatic Calibration

This wiring is for operating the solenoid valve to switch zero and span gases during calibration in the automatic calibration system and for operating the solenoid valve installed on the calibration gas line to the detector of each channel. The contact output for solenoid valve is also used for operating the solenoid valve on the blow back piping. For the wiring and piping of the system, refer to Section 5.3, Wiring and Piping Examples.

Use shielded cables that withstand temperatures of at least 80°C for the wiring for solenoid valves. The shields should be connected to cable shield ground terminals on the case of the averaging converter.

If a cable gland is not installed on the wiring hole of the averaging converter, use a wire with an outside diameter of 17 mm or smaller. If installed, use a wire with an outside diameter of 6 to 12 mm. Like the signal wiring to detectors, the shields should be connected to cable shield ground terminals on the case of the averaging converter.

All contact outputs for solenoid valves are voltage free, dry contacts (mechanical relay contact outputs). The contacts are open under normal conditions (when deenergized).
The contact rating is 250 V AC, 1A or 30 V DC, 1A.

If optional 24 V outputs are specified for solenoid valves (Option Code “/24”), no external power supply for solenoid valves is required. The solenoid valves are powered from the AV550G Averaging Converter. The maximum current that can be supplied to the solenoid valve is 50 mA. Use solenoid valves that consume not more than 1.2 W to operate.

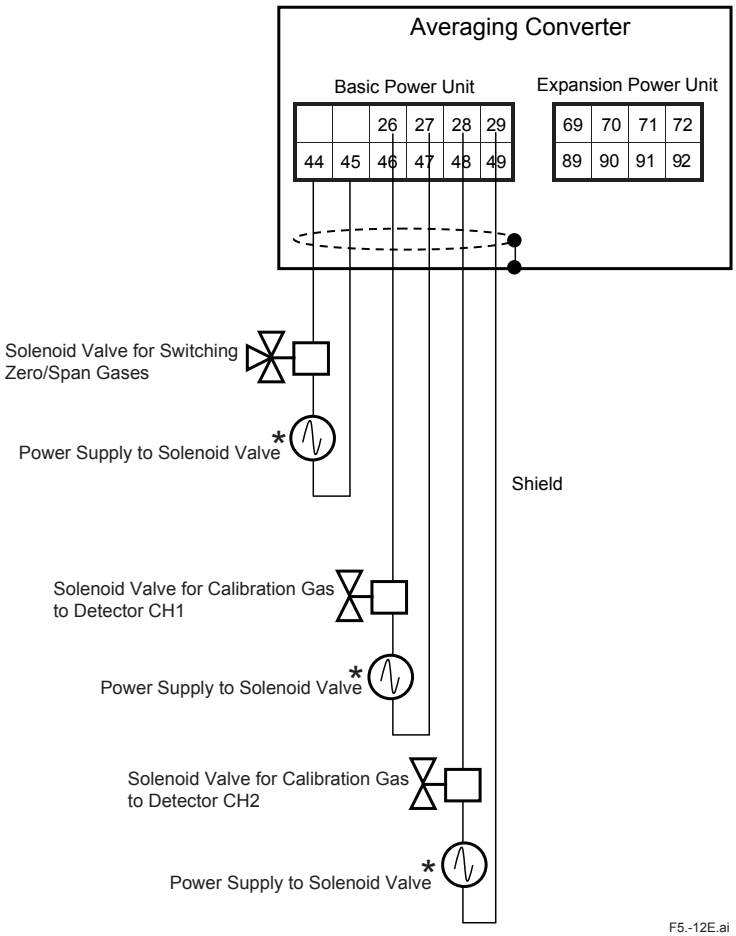

* : If optional 24 V outputs are specified for solenoid valves (Option Code "/24"), no external power supply for solenoid valves is required. The solenoid valves are powered from the AV550G Averaging Converter. Never connect external power sources in the wiring for solenoid valves.

Figure 5.12 Wiring for Solenoid Valve for Automatic Calibration

5.2.9 Wiring for Individual/Common Error Contact Outputs and Functional Contact Outputs

The averaging converter has the following contact outputs.

(1) Functional contact outputs (DO1 to DO4): User specified functions can be assigned.

(2) Common error contact output (DO5): Activated when any error occurs.

(3) Individual error contact outputs (DO-CH1 to DO-CH8): Channel-specific contacts.
One output is provided per channel.

For details on errors, refer to Section 12.1, “Displays and Remedies When Errors Occur.”
All contact outputs are Form C (transfer contact) and consist of 3 terminals of COM, NC, and NO. All contacts are voltage free, dry contacts (mechanical relay contact outputs). The contact rating is 250 V AC, 3A or 30 V DC, 3A.

The individual and common error contacts are set to normally energized and cannot be changed. The “NC” and “NO” indications on the terminal show energized states. States of functional contact outputs DO1 to DO4 are user selectable: normally energized or normally deenergized. The “NC” and “NO” indications on the terminal show deenergized states.

Use cables that withstand temperatures of at least 80°C for the wiring for these outputs. There is no need to use shielded cables. If a cable gland is not installed on the wiring hole of the averaging converter, use a wire with an outside diameter of 17 mm or smaller. If installed, use a wire with an outside diameter of 6 to 12 mm.

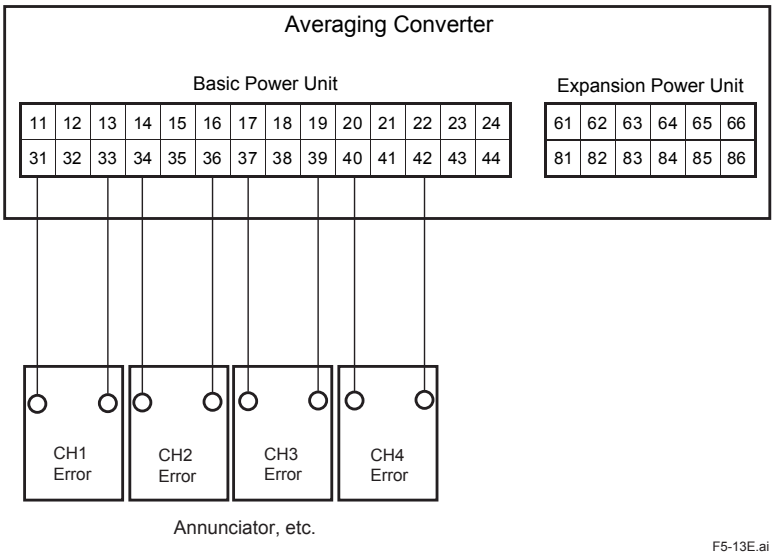

Figure 5.13 Wiring for Individual/Common Error Contact Outputs and Functional Contact Outputs

5.2.10 Wiring for Contact Inputs

The averaging converter receives contact inputs to perform the specified functions.
Follow the instructions below to run the wiring for contact inputs.

Use 2-core or 3-core cable that withstand temperatures of at least 80°C for this wiring. The number of cores is determined by the number of contacts to be used. There is no need to use shielded cables. If a cable gland is not installed on the wiring hole of the averaging converter, use a wire with an outside diameter of 17 mm or smaller. If installed, use a wire with an outside diameter of 6 to 12 mm. Like the signal wiring to detectors, the shields should be connected to cable shield ground terminals on the case of the averaging converter.

Contact inputs should be voltage free. The open/closed state of the contact is determined by the resistance from the averaging converter side. Note that the resistance should include the wiring resistance.

Closed contact: 200 Ω or less

Open contact: 100 kΩ or more

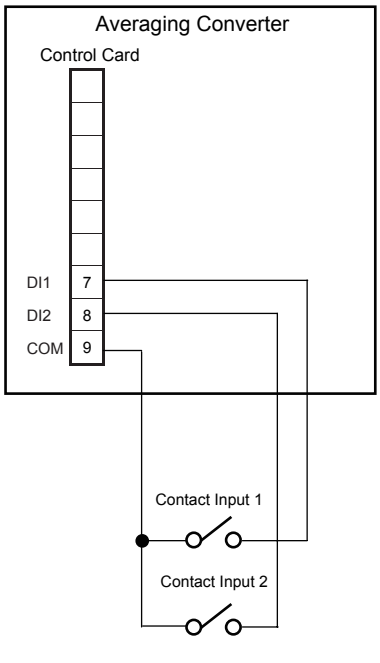

Figure 5.14 Wiring for Contact Inputs

5.3 Wiring and Piping Examples

5.3.1 Wiring and Piping for Automatic Calibration

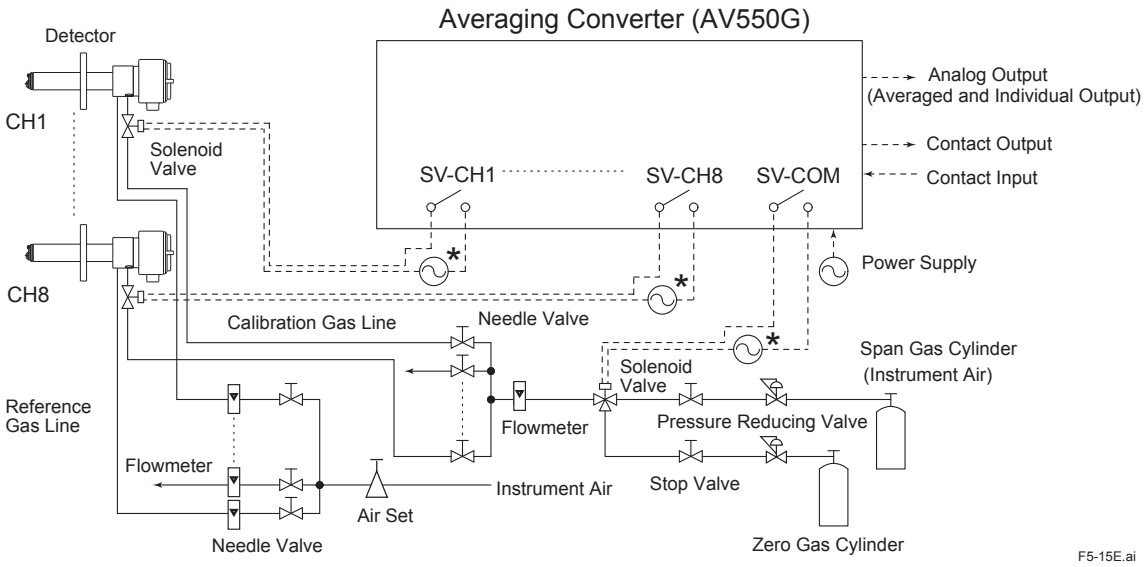

*: If optional 24 V outputs are specified for solenoid valves (Option Code "/24"), no external power supply for solenoid valves is required. The solenoid valves are powered from the AV550G Averaging Converter. Never connect external power sources in the wiring for solenoid valves.

Figure 5.15 Typical Diagram for Automatic Calibration

5.3.2 Wiring and Piping for Automatic Calibration and 3rd Gas Indication Check

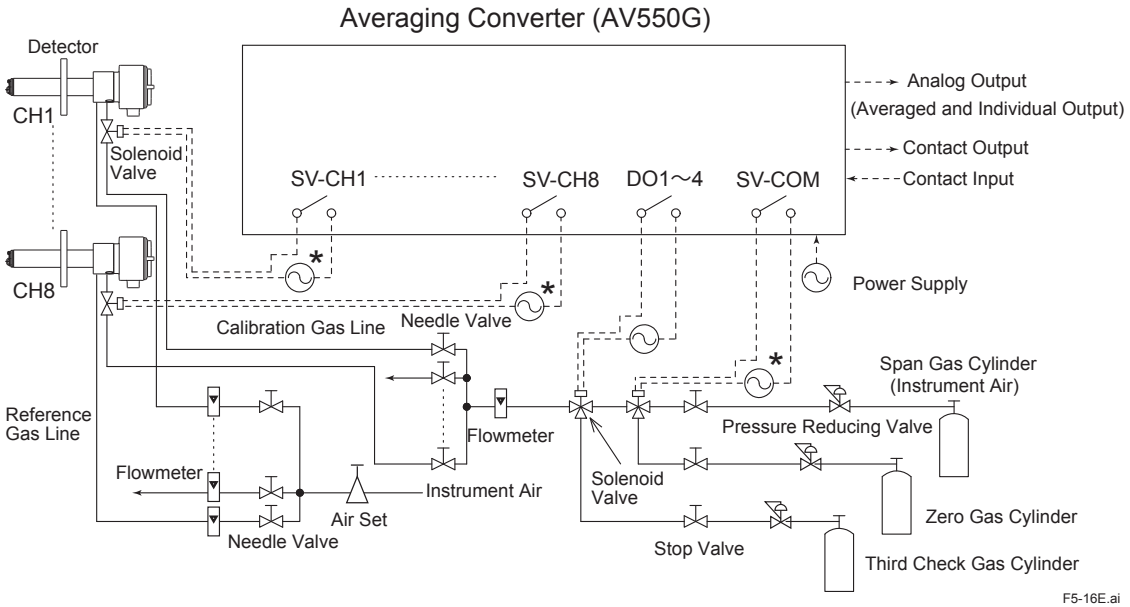

*: If optional 24 V outputs are specified for solenoid valves (Option Code "/24"), no external power supply for solenoid valves is required. The solenoid valves are powered from the AV550G Averaging Converter. Never connect external power sources in the wiring for solenoid valves.

Figure 5.16 Typical Diagram for Automatic Calibration and 3rd Gas Indication Check

5.3.3 Wiring and Piping for Blow back

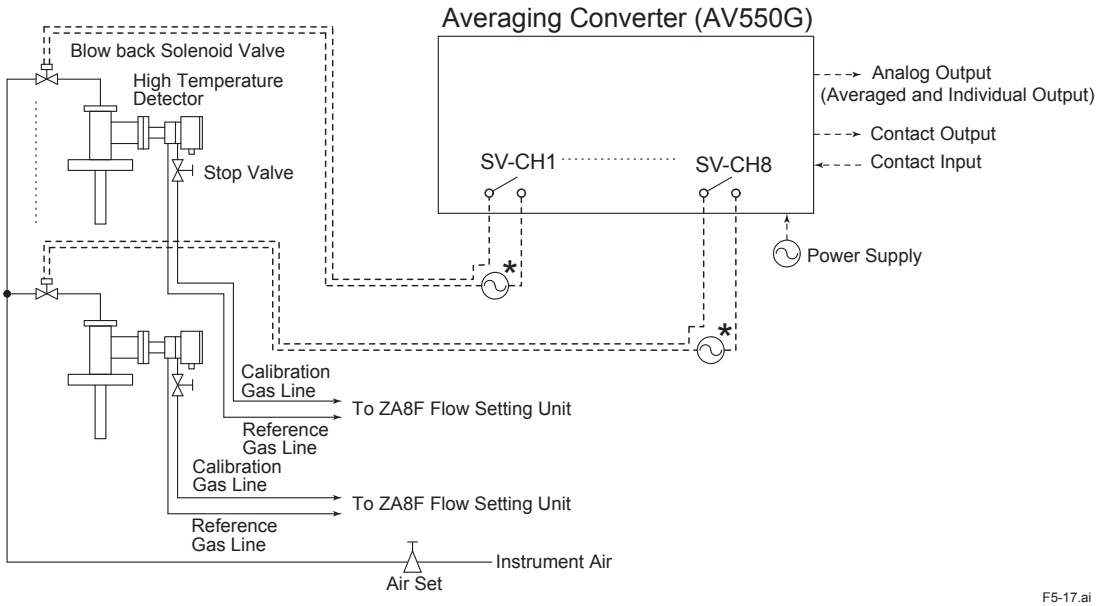

*: If optional 24 V outputs are specified for solenoid valves (Option Code "/24"), no external power supply for solenoid valves is required. The solenoid valves are powered from the AV550G Averaging Converter. Never connect external power sources in the wiring for solenoid valves.

Figure 5.17 Typical Diagram for Blow back

5.3.4 Wiring and Piping for Automatic Calibration and Blow back

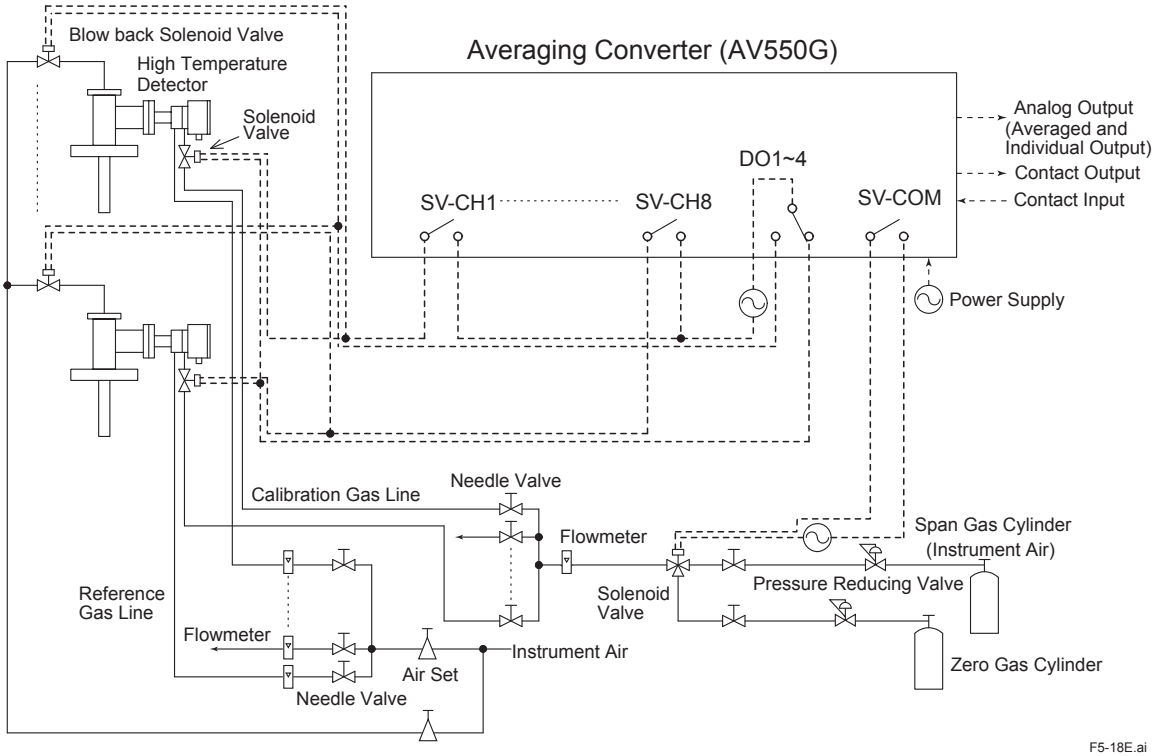

Note : If optional 24 V outputs are specified for solenoid valves (Option Code "/24"), this system cannot be established. This is because the contact to activate a solenoid valve is used in common for automatic calibration and blow back.

Figure 5.18 Typical Diagram for Automatic Calibration and Blow back

6. Components

In this Chapter, the names and functions of components are described for the major equipment of the AV550G Averaging Converter.

6.1 ZR22G Detector

6.1.1 General-purpose Detector (except for Model ZR22G-015)

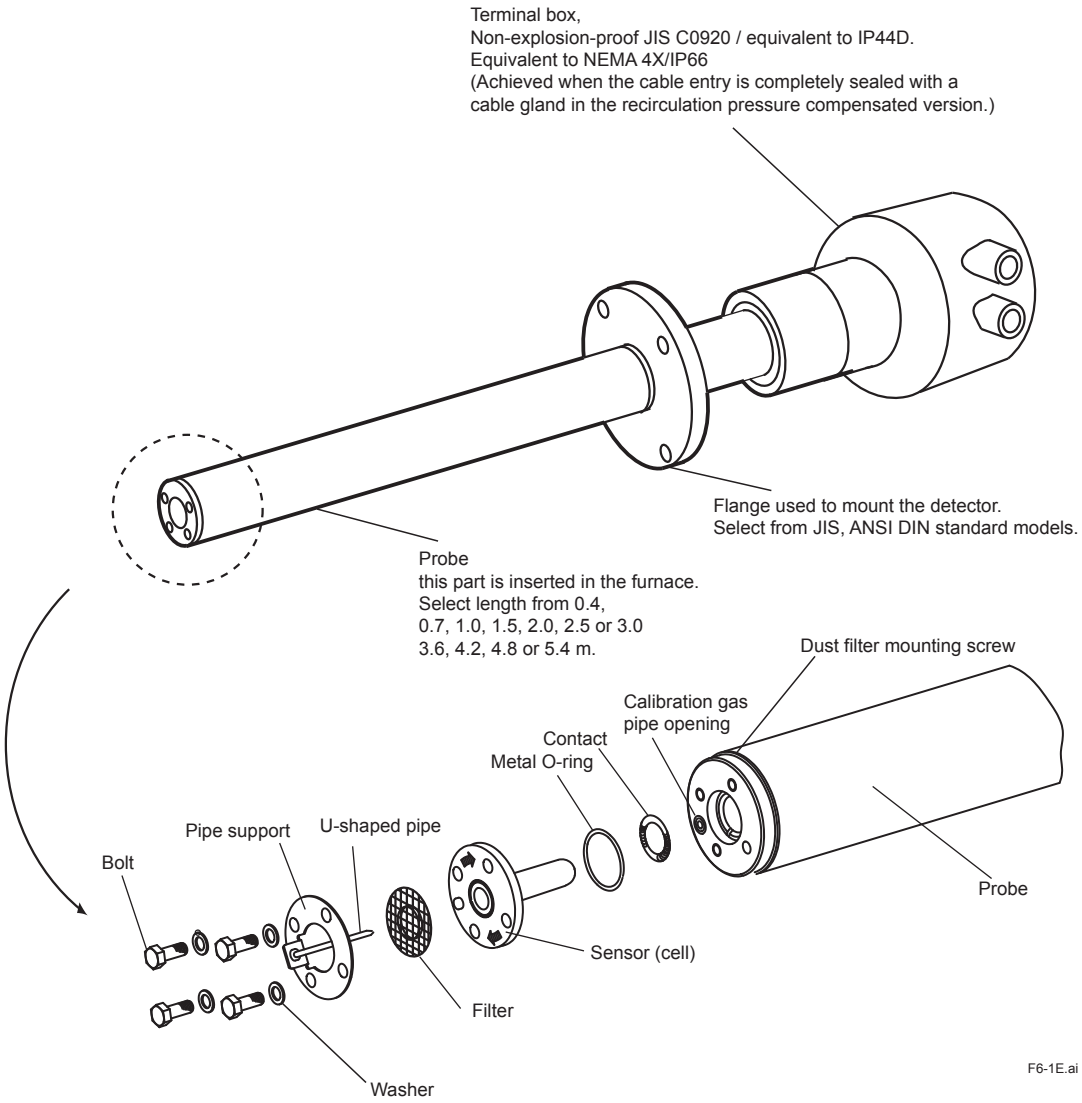

Figure 6.1 General-purpose Detector (standard type)

6.1.2 High Temperature Detector (Model ZR22G-015)

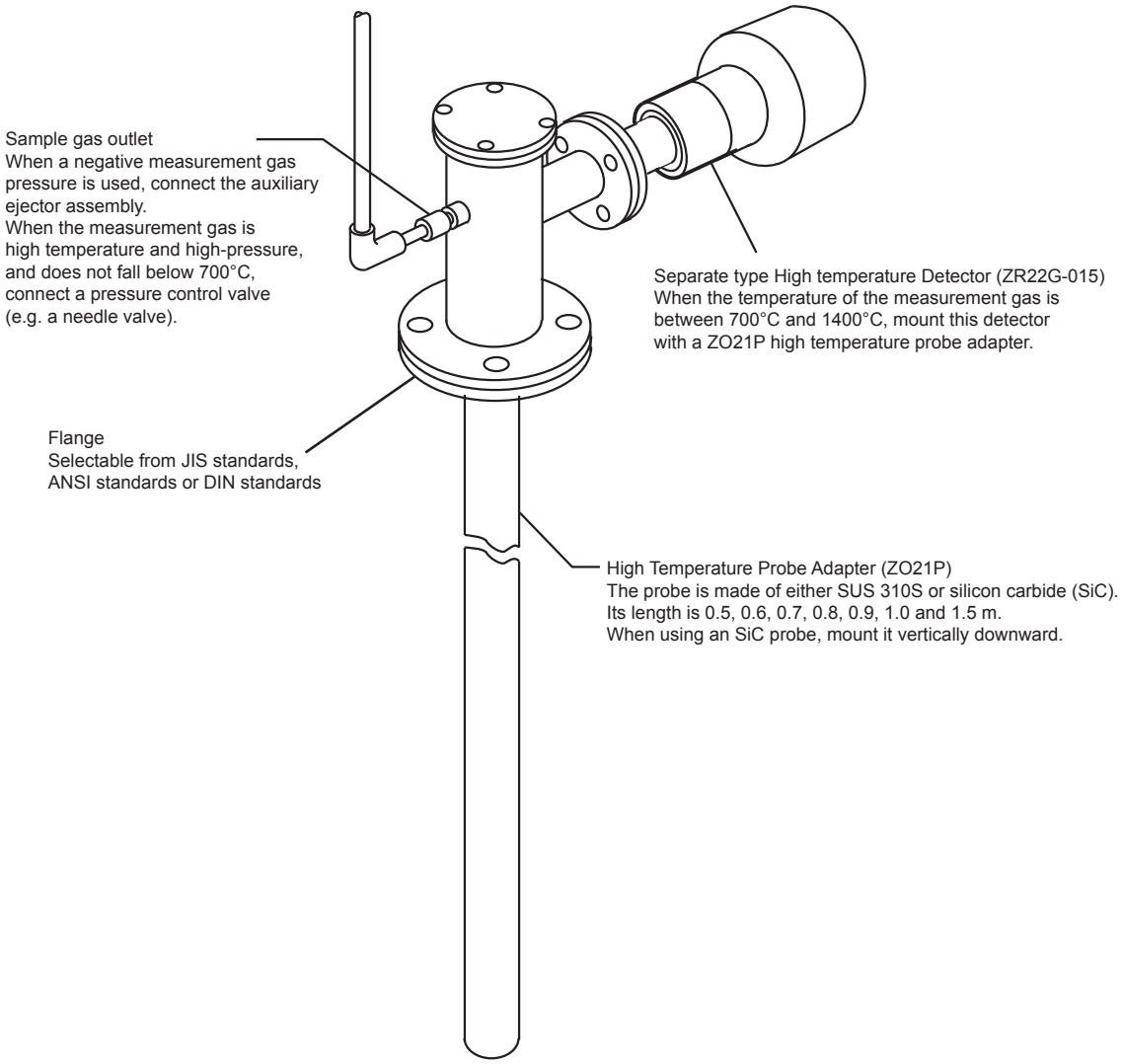

Figure 6.2 High Temperature Detector

6.2 AV550G Averaging Converter

6.2.1 Components and Function

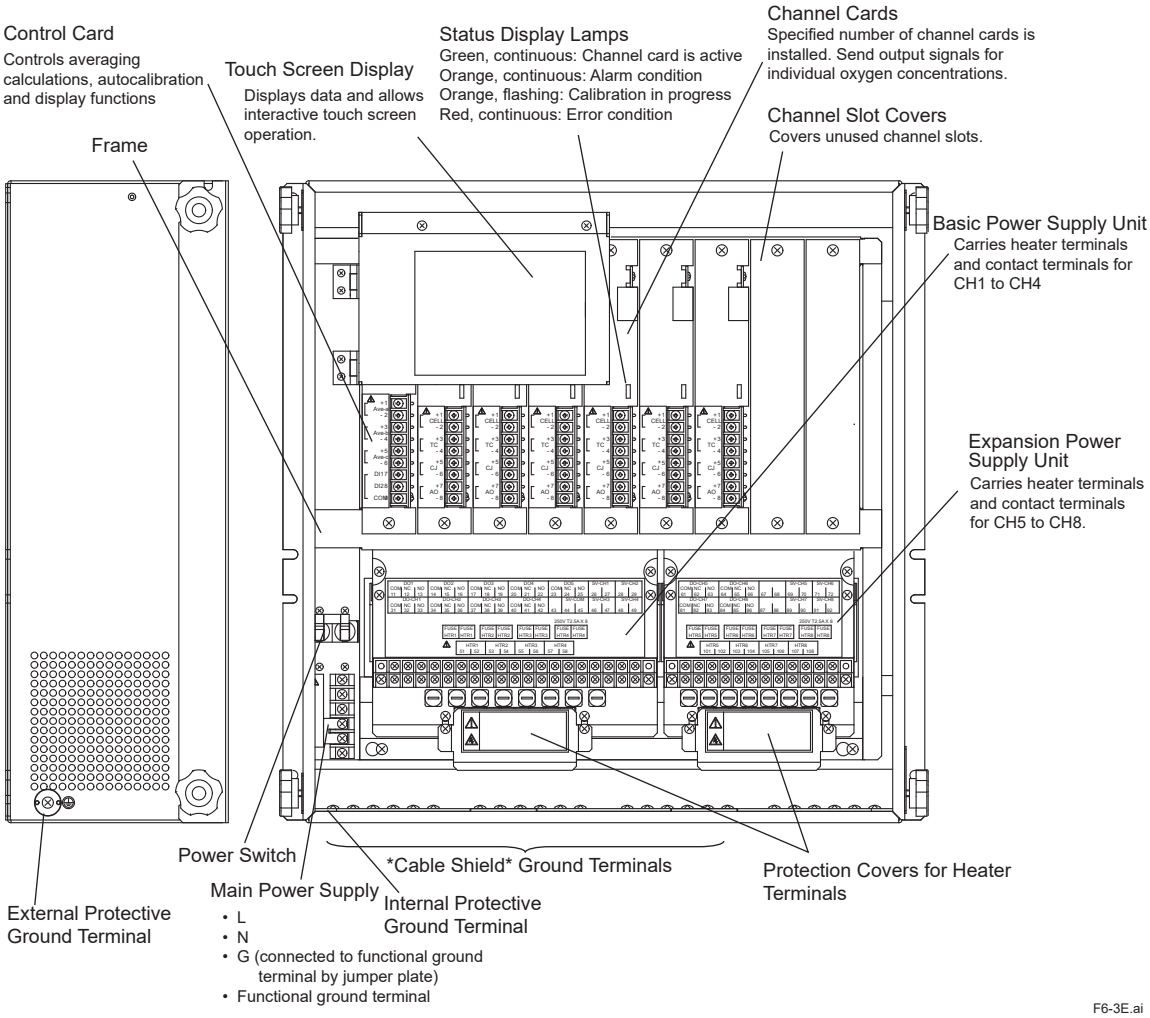

Figure 6.3 Components and Function of AV550G

6.2.2 Touchpanel Switch Operations

Panels and Switches

The averaging converter uses touchpanel switches which can be operated by just touching the panel display. The display viewed upon power up or during oxygen concentration measurement varies depending on the number of channel cards installed in an averaging converter. Data of 4 channels will be displayed if 1 to 4 channel cards are installed. If more than 4 channel cards are installed, data of 8 channels will be displayed.

Even if the number of channel cards is 4 or less, data of 8 channels will be displayed if an expansion power supply unit is mounted and a card is installed on any of channels CH5 to CH8. The display "---" means a channel no card is installed in the channel. As shown in upper left and right displays in Figure 6.4, data of multiple channels can be viewed in a single screen, which is called a multi-channel display.

On this display, touch the indication area (enclosed by dotted line) of the desired channel. A display shown in bottom in Figure 6.4 will appear. This display will show the oxygen concentration (or cell temperature during warm-up) and average concentration data (groups a, b, and c) (show "---" if all channels are in warm-up period) of the selected channel, which is called a single-channel display. To return to the previous multi-channel display, touch the area enclosed by dotted line.

The operation status of the averaging converter is indicated by yellow marking at the bottom of the display. Table 6.1 shows the types and conditions of the markings.

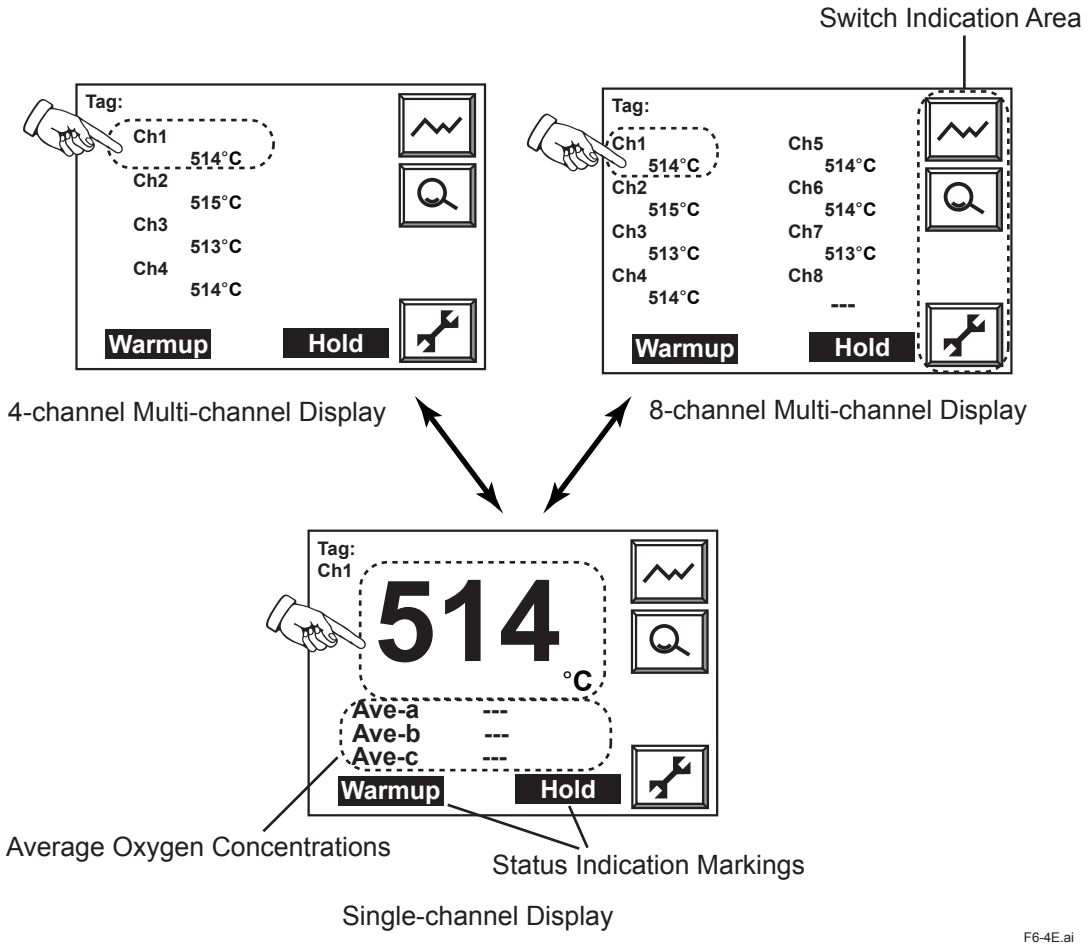

Figure 6.4 Multi-channel Display and Single-channel Display

Table 6.1 Types of Status Indication Markings

Marking	Condition
Purge	Displayed if any of the calibration gas channels is being purged.
Warmup	Displayed if any channel is in warmup status. If any other channel is in Purge status then Purge status display takes preference.
CAL.TIME	Channel is in calibration period: calibration gases are being introduced.
CHK.TIME	Channel is in check period: check gases (including 3rd check gas) are being introduced.
BLOW TIME	Blow back is being performed.
HOLD TIME	Channel is in stabilization period after calibration, indication check, or blow back.
Hold	Output is being held.
Range	Range is being switched by contact input.

Switches and Their Functions

Switch icons displayed on the right side of the display vary depending on the panel display, allowing all switch operations. Table 6.2 shows the functions of the switches.

Table 6.2 Switches and Their Functions

Home key:
Returns to the Execution/Setup display.

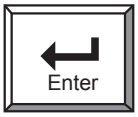

Enter key:
Confirms data entry or selected item.

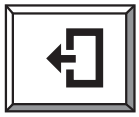

Reject key:
Moves back to the previous display.

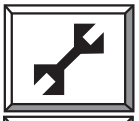

Setup key:
Moves to the Execution/Setup display.

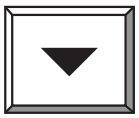

Cursor key:
Moves the cursor downward.

Detailed data key:
Displays detailed operation data.

Graph display:
Displays a trend graph.

Graph display key:
Displays a trend graph in cascade pattern.

Alarm:
Displayed if an alarm arises.

Error:
Displayed if an error occurs.

Page scroll key:
In detailed data display, scrolls up/down one page.

Channel scroll key:
In detailed data display or data setup display, moves to the previous/next channel.

Update key:
In error or alarm display, updates the information displayed.

Cursor:
Points to the currently selected item.

T6-2E.ai

Display Configuration

Display configuration is shown below.

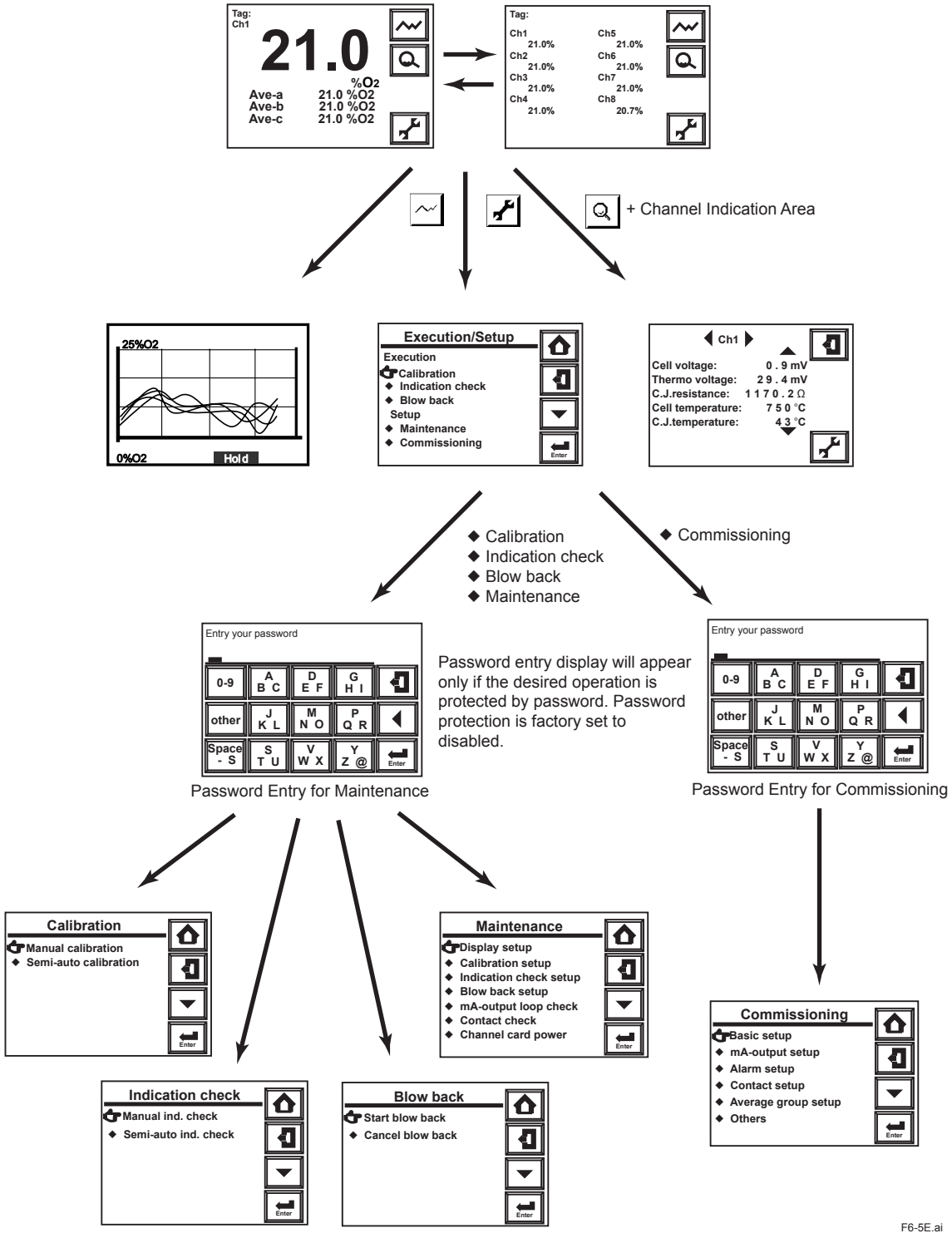

Figure 6.5 Display Configuration of AV550G

Display Functions

1) Basic panel display (Displays measured oxygen concentrations, and cell temperatures during warm-up period.)

The basic panel display consists of a multi-channel display and a single-channel display.

The multi-channel display screen shows cell temperatures during warm-up period and oxygen concentrations afterward. The single-channel display screen shows the data of the selected channel — the cell temperature or oxygen concentration and average concentrations of each group. If an error or alarm occurs, a relevant icon will be flashing in its display area. If an error and an alarm occurs at the same time, the error icon display takes precedence. For details on errors and alarms, refer to Chapter 12, Troubleshooting.

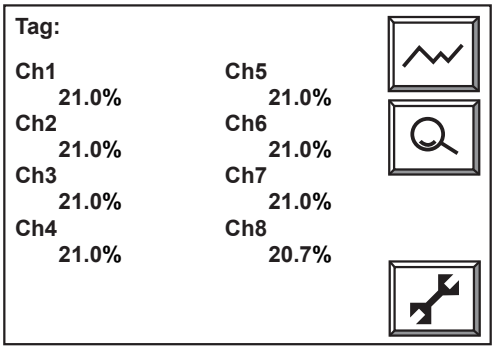

Multi-channel Display Showing Oxygen Concentration

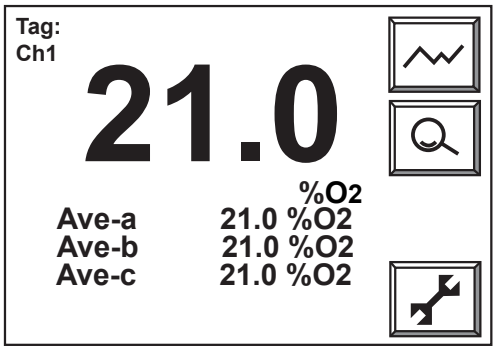

Single-channel Display Showing Oxygen Concentration

Red error code is indicated on a relevant channel.

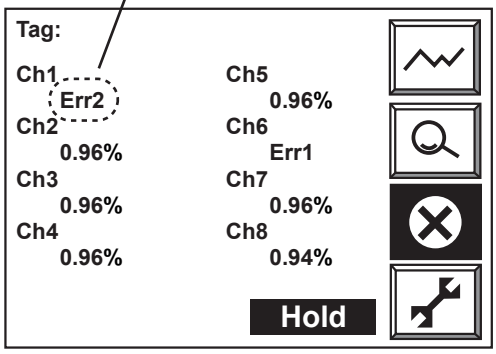

Multi-channel Display When Error Occurs

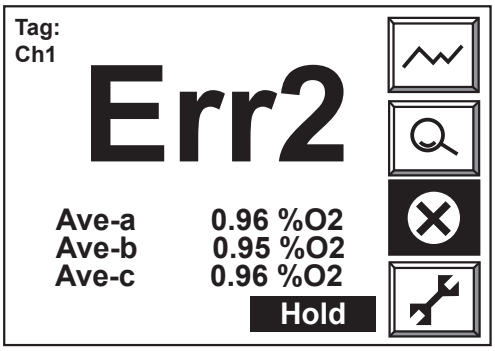

Single-channel Display When Error Occurs

F6-6E.ai

Figure 6.6 Basic Panel Displays

2) Detailed data display

To move to the detailed data display, touch the Detailed data key and then touch the indication area of the desired channel in the multi-channel display, or simply touch the Detailed data key in the single-channel display. The detailed data display shows maintenance data, such as cell electromotive force, cell temperature, and calibration history, per channel.

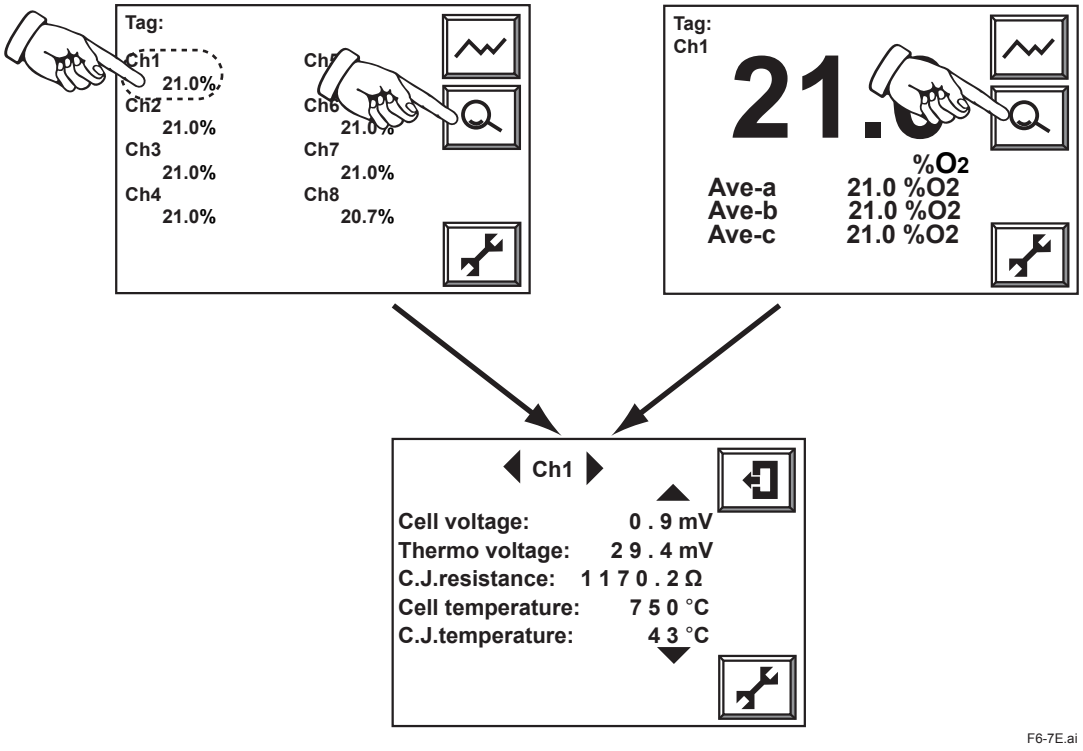

Figure 6.7 Detailed Data Display

3) Trend graph display

Up to 11 user-selected data from among the individual outputs from each channel and average concentration outputs, groups a, b, and c, can be viewed in graphical format at a time in a single screen. To move to the trend graph display, touch the graph display key on a basic panel display. The cascade function may be used to view each trend line of channels clearly in the trend graph display. The function offsets the axes so that trend lines do not overlap.

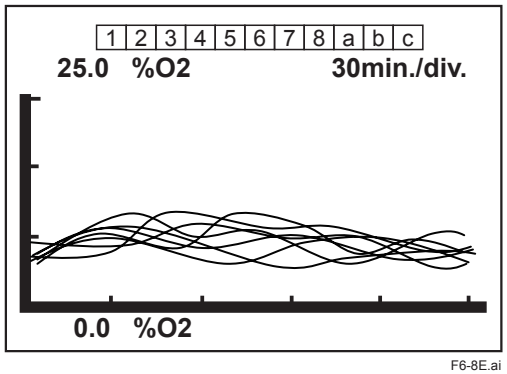

Figure 6.8 Trend Graph Display

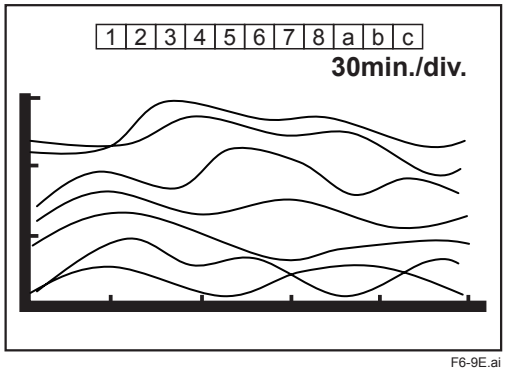

Figure 6.9 Cascade Display

4) Execution/Setup display

Touch the Setup key on the basic panel display. The Execution/Setup display will appear. From the menu items — calibration, indication check, blow back, maintenance, or commissioning, select the desired item to perform.

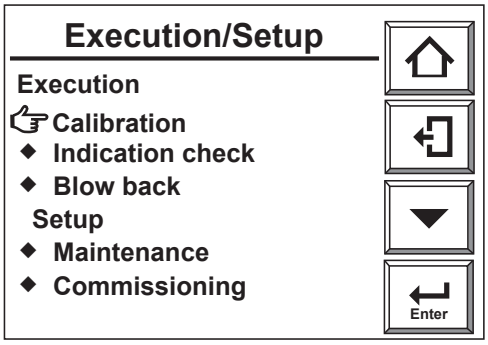

Figure 6.10 Execution/Setup Display

5) Calibration display

From the menu on the Execution/Setup display, select Calibration. The Calibration display will appear. Calibration can be performed from the menu on this display.

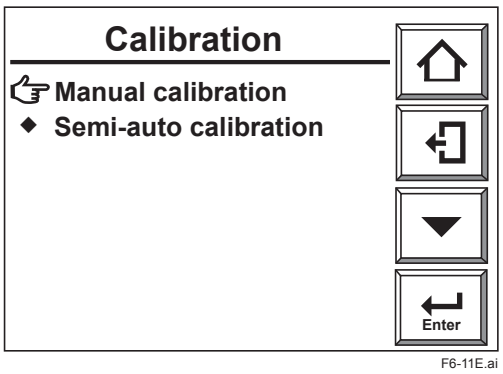

Figure 6.11 Calibration Display

6) Indication check display

From the menu on the Execution/Setup display, select Indication check. The Indication check display will appear. Indication check can be performed from the menu on this display.

7) Blow back display

From the menu on the Execution/Setup display, select Blow back. The Blow back display will appear. Blow back can be performed from the menu on this display.

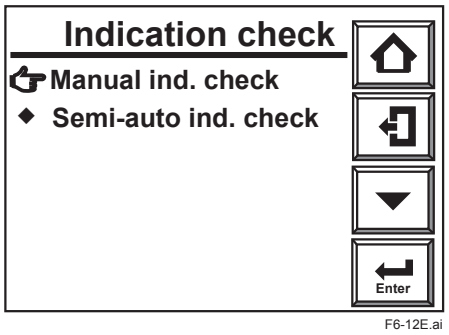

Figure 6.12 Indication Check Display

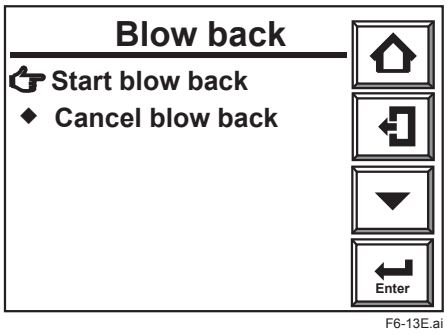

Figure 6.13 Blow Back Display

8) Maintenance display

From the menu on the Execution/Setup display, select Maintenance. The Maintenance display will appear. The following can be performed from the menu on this display.

1. Display setup
2. Calibration, Indication check, and Blow back setups
3. mA-output loop and Contact checks
4. Channel card power

9) Commissioning display

From the menu on the Execution/Setup display, select Commissioning. The Commissioning display where parameter setups can be selected will appear. The following can be selected from the menu on this display.

1. Selection of detectors and sample gases
2. Analog output setup
3. Alarm setup
4. Contact input/output setup
5. Average group setup
6. Others — clock setup, password setup, etc.

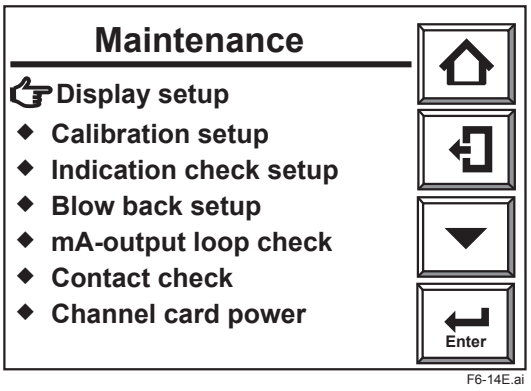

Figure 6.14 Maintenance Display

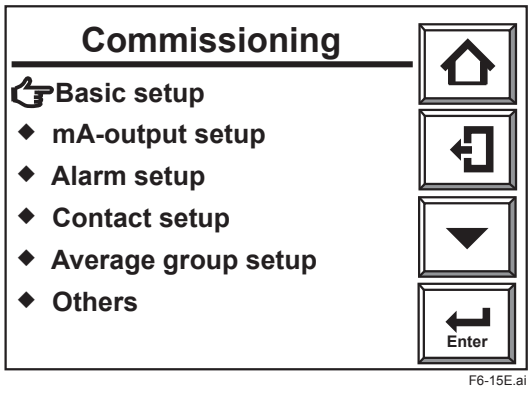

Figure 6.15 Commissioning Display

Entering Numeric and Text Data

This section sets out how to enter numeric and text data. If only numeric values are entered, a numeric-data entry display as in Figure 6.16 then appears. Press the numeral keys to enter numeric values. If those values include a decimal point as in Figure 6.16, the decimal point need not be entered because the decimal point position is already fixed, so just enter 00098.

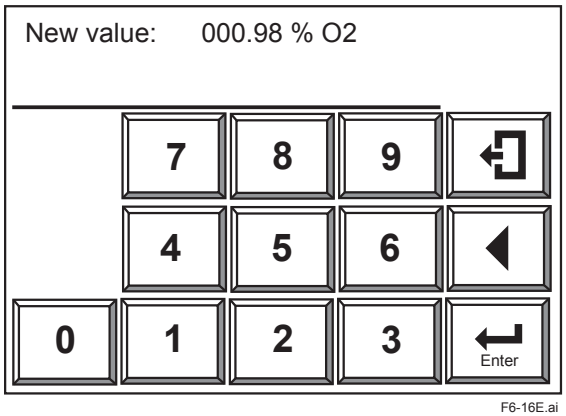

Figure 6.16 Numeric-data Entry Display

To enter a password (in combination with text data, numeric values and codes), the alphabetic character entry panel display first appears. If you press any numeral key (0 to 9), the current display then changes to the numeric-value entry panel display, enabling you to enter numeric values. If you press the “other” key, the current display then changes to the code-entry display, enabling you to enter codes. These displays alternate between the three. Figure 6.17 shows the relationship between these three displays.
Three alphabetic characters and three codes are assigned for each individual switch. If the alphabetic character key is pressed and held, three characters appear in turn. Move the cursor to the desired character and release the key to enter it. If an incorrect character is entered, move the cursor to re-enter the characters. The following shows an example of entering “abc%123.”

Operation	Display
Press the [ABC] key once.	A _
Press and hold the [ABC] key.	A A B → C
Release the [ABC] key when the character B appears in the cursor position.	AB _
Enter the character C in the same manner as above. Press the [other] key.	ABC _
Press and hold the [$%&] key and enter “%.” Then press the [0-9] key.	ABC% _
Enter the numeric characters 1, 2 and 3 in turn. Press the Enter key to complete the entry.	ABC%123 _

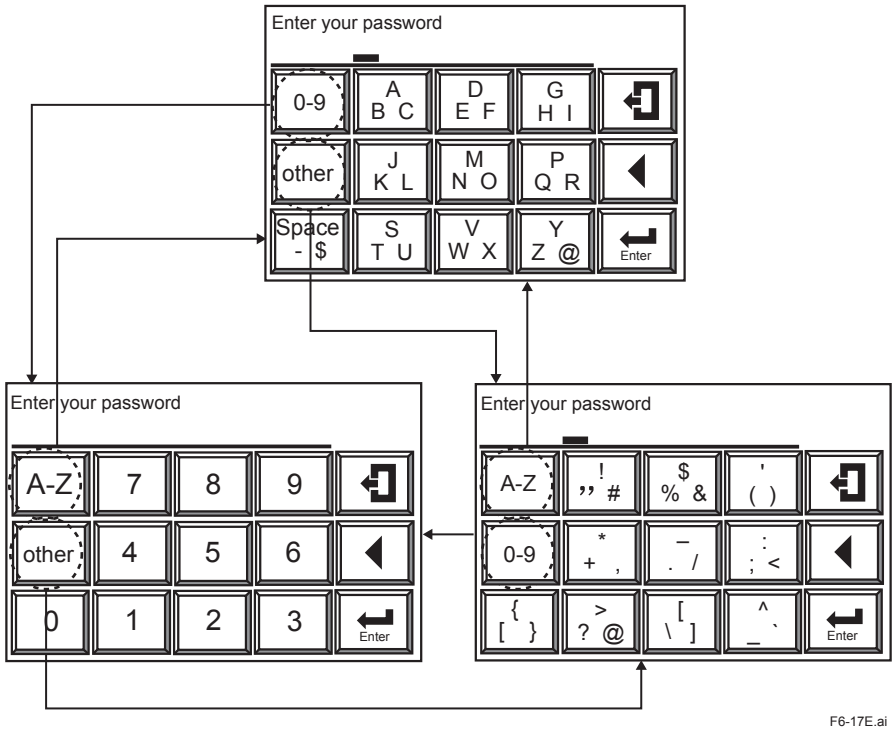

Figure 6.17 Text Entry Display

6.3 ZA8F Flow Setting Unit

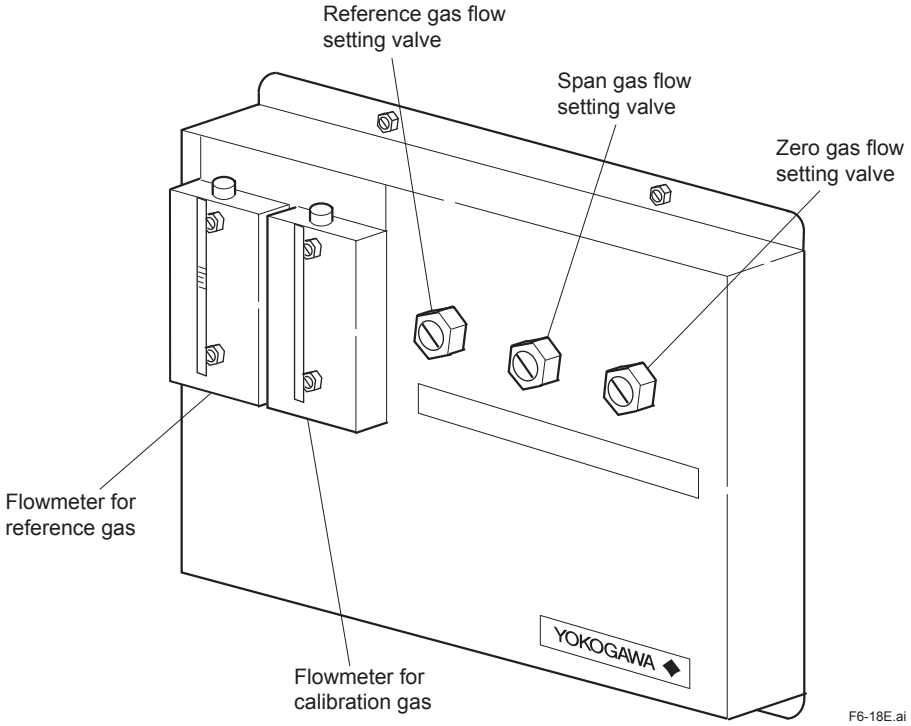

Figure 6.18 ZA8F Flow Setting Unit

7. Startup

This Chapter explains the startup procedures for the Averaging Converter: supplying power, setting parameters as required, and performing manual calibration.

7.1 Startup Procedure

The startup procedure is as follows:

CAUTION

If you connect Model ZO21D detectors, then you need to change the detector parameters.
Before connecting power, refer to: Section 7.4 Setting Detector Model.

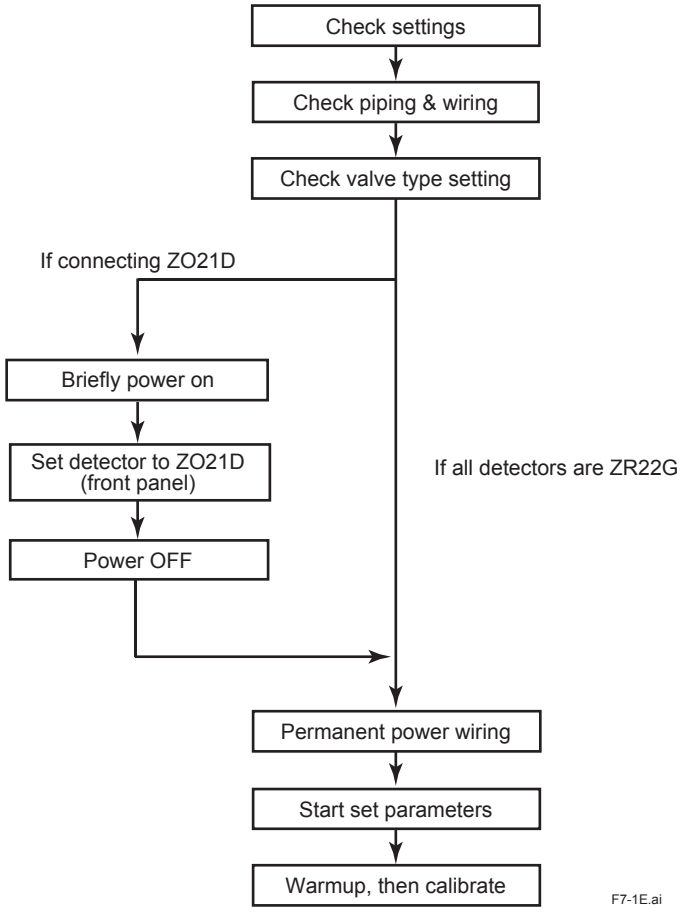

Figure 7.1 Startup Procedure

7.2 Check Piping and Wiring

Check piping and wiring (refer to Chapter 4 for piping, and Chapter 5 for wiring).

7.3 Set Valve Type

Set valves (which depend on your system configuration) as follows:

1) If there is a shut-off valve at the calibration gas inlet, shut it.
2) Assuming that instrumentation air supply is used as the reference gas, adjust air set secondary pressure to approximately 50 kPa above that of the sample gas -- if there is a check valve, then adjust it to approximately 150 kPa above that of the sample gas (but pressure should be no greater than 300 kPa). Adjust reference gas flow so that it is in the range 800~1000 ml/min.

7.4 Setting Detector Model

The default detector model set before shipment from the factory is ZR22G. If you plan to use the ZO21D then before starting warmup you need to change the default setting. If you do not change the setting before starting warmup then detector temperature control will not work properly and serious damage to the detector may result.
There are two ways of changing this setting before warmup, as follows:

[How to use Channel-card "Hot Swap" feature]

This converter allows you to toggle the power supply of individual channel cards OFF/ ON while power to the converter is applied. This method also allows you change the detector model settings without detector warm up.

1) Touch the Setup key, and the [Execution/Setup] display appears.
2) Use the pointer cursor key to move the pointer to [Maintenance] and touch the Enter key.
3) On the Maintenance display, select [Channel card power] and touch the Enter key. A display like that shown in Figure 7.3 appears.
4) On the [Channel card power] display, select the channel no. of a channel connected to a ZO21D then touch the Enter key.
5) A [Disable/Enable] selection window is displayed. Select [Disable] and touch the Enter key. Confirm that the status display lamp of the corresponding channel turns off.
6) Repeat the above procedure for each channel connected to a ZO21D and disable power.
7) Touch the Home key to return to the [Execution/Setup] display.
8) Select [Commissioning] --> [Basic setup] --> [Detector], then the Detector Selection display appears.
9) Select each channel to be connected to a ZO21D and change the ZR22G default to ZO21D.
10) After changing the settings for all channels to be connected to ZO21D detectors, turn off converter power.

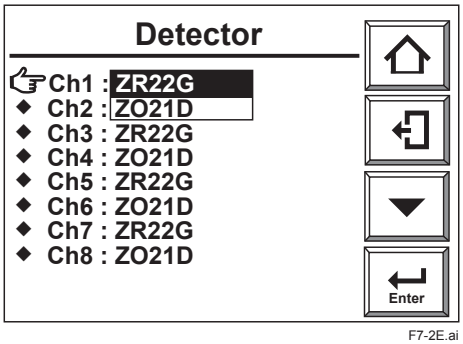

Figure 7.2 Detector Selection

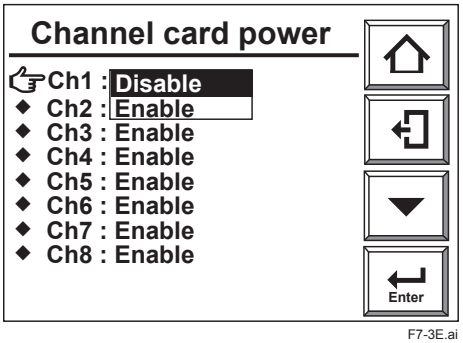

Figure 7.3 Channel Card Power Setting

[Disconnect power to the heater; this will generate an error]

If you disconnect the signal wiring from the detector then this will generate an error, but this allows you to change the detector model settings without detector warm up.

1) Remove all thermocouple (TC) signal wiring from channel cards which connect to ZO21D detectors.
2) Apply power to the averaging converter.
3) Error messages are displayed for these channels, but you can set their parameters.
4) Touch the Setup key, and the [Execution/Setup] display appears.
5) Select [Commissioning] --> [Basic setup] --> [Detector], then the Detector Selection display (Figure 7.2) appears.
6) Select channels to be connected to ZO21D, and change [ZR22G] to read [ZO21D].
7) After changing the channels settings of all channels to be connected to ZO21D detectors, turn off converter power.
8) Reconnect the removed thermocouple (TC) signal wiring to the channel cards.

7.5 Supply Power to Averaging Converter

CAUTION

To avoid temperature changes around the sensor, it is recommended that (rather than turning it on and off) power be continuously supplied to the Averaging Converter if it is used in an application where it is used periodically.

It is also recommended to flow a span gas (instrument air) beforehand.

Before connecting power check that power switch is set to “O (Off)”. After connecting power, turn power switch to “I (On)”. The startup display is displayed for about 10 seconds then the multi-channel cell temperature display shown in Figure 7.4 appears.
Confirm that the displayed temperatures of each channel gradually increase.

After the cell temperatures reach their target setting of 750°C and stabilize, the display switches to show oxygen concentration. When all the channels have switched to display oxygen concentration, the red [Warmup] and [Hold] alarm marks at the bottom of the display disappear.

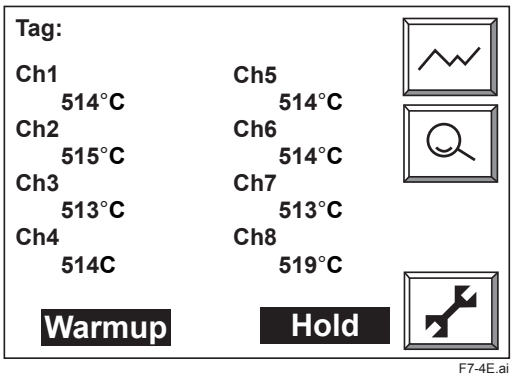

Figure 7.4 Display during warmup

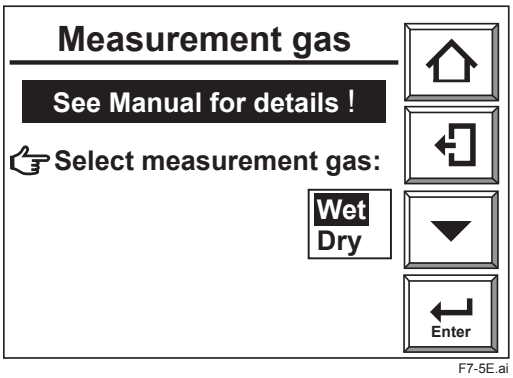

Figure 7.5 Measurement gas selection

NOTE

Depending on furnace conditions, the cell temperature may overshoot the target by 10~15°C during the warmup phase. This is not an abnormality.

7.6 Selection of Gas to be Measured

Exhaust gas includes steam resulting from combustion of hydrogen and oxygen. You may choose whether to display the oxygen concentration including the oxygen contained in the steam, or display the computed “dry” oxygen concentration (a value compensated for the oxygen in steam) which results in a higher concentration value. For details, refer to “ Fuel Setup” in Subsection 8.5.3.

<Setting Procedure>

1) Touch the Setup key to switch to the [Execution/Setup] display.
2) Select [Commissioning] --> [Basic setup] --> [Select measurement gas] and the [Measurement gas] display appears.
3) Touch the Enter key and the Measurement gas selection window opens for you to select the measurement gas.

The Measurement gas selection applies to all channels, you cannot specify it on a channel-by-channel basis.

7.7 Current Output Range Setting

The output ranges (two ranges) of each channel are independently settable. Ranges are switched by contact input. Contact OFF results in Range 1, and contact ON results in range 2. For details, refer to Section 8.4 Setting Contact Inputs. Shipping time default is for each range to be set to 0 to 25% O_2. The ratio of the maximum range setting to the minimum is restricted as described in Section 8.1 Setting Analog Outputs.

<Setting Procedure>

1) Touch the Setup key to switch to the [Execution/Setup] display.
2) From the [Commissioning] display select [mA-output setup], then [Set range]. (See Figure 7.6).
3) Use [◀] and [▶] keys to select the channel.
4) Set [min] O_2 concentration corresponding to 4 mA output, then set [max] O_2 concentration corresponding to 20 mA output (select, then touch the Enter key).
5) The numeric data entry display shown in Figure 7.7 appears; enter the desired oxygen concentration setting. To set 10% O_2, input [010] and touch the Enter key.
6) As necessary, repeat for averaging output a, b and c and other channels.

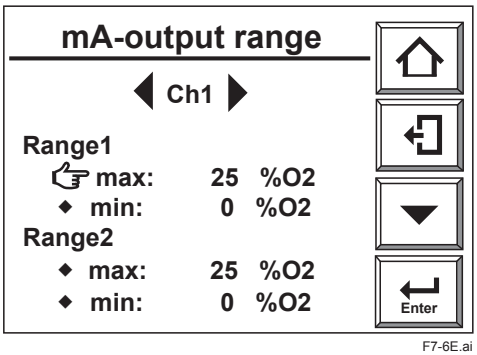

Figure 7.6 Current-output range

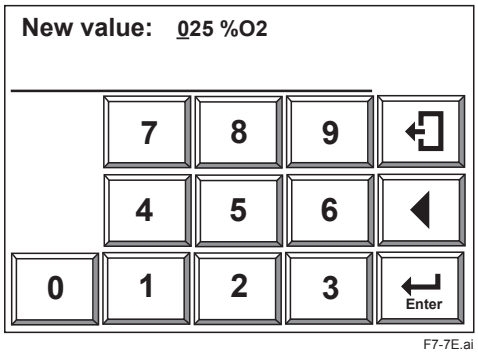

Figure 7.7 Numerical entry

7.8 Averaging Group Setting

The AV550G can determine oxygen concentration average for three averaging groups a, b, and c. a and b can each be arbitrary channel groupings, and the corresponding averages are output. c output is (a+b) /2. Select the groupings for a and b as per the procedure below.

<Setting Procedure>

1) Touch the Setup key to switch to the [Execution/Setup] display.
2) From the [Commissioning] display select [Average group setup], then [Average group -a]. Figure 7.8 shows the display.
3) Select the group to set (a or b) then touch the Enter key. Channels that you can select are displayed.
4) Channels that are set to [ON] belong to that group. Use the pointer cursor keys to move the pointer to any channel whose status you want to toggle, then touch the Enter key. The ON/OFF selection window opens, and you can toggle status.
5) Any or all channels may belong to both groups a and b.

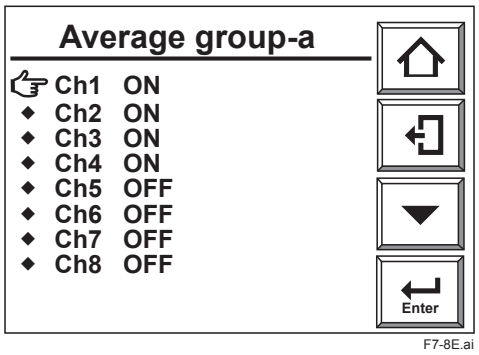

Figure 7.8 Setting Averaging Group

< Shipping-time defaults >
At shipping time, averaging groups a and b contain all channels (all channels [ON]).

NOTE

If you set all channels in a group to [OFF] then the averaged output will be held at the current set by [Ave group invalid] on the [mA-outputs hold] display. In this case, the status mark at the bottom of the display will be [HOLD]. For details, refer to Subsection 8.1.2 Output Hold Setting (Applies to All Outputs).

7.9 Calibration

To calibrate this instrument, the procedure is to measure zero gas and span gas and set the instrument to read the known concentrations. The procedure for both zero and span calibration, or for either zero or span calibration, can be performed manually from the touch display, or can be performed semi-automatically using contact signal inputs to start calibration, (allowing preset calibration and stabilization times), or it can be performed automatically at preset intervals. Here we explain manual calibration.

7.9.1 Setting Calibration Gas Concentration

Before calibrating, you need to set the (oxygen) concentration of the gas you will use for calibration. Here we explain how to do this. Note that calibration-related settings apply to all channels, you can't set different values for individual channels.

A gas with a known oxygen concentration is used for calibration. Normal calibration is performed using two different gases: a zero gas of low oxygen concentration and a span gas of high oxygen concentration. In some cases, only one of the gases needs to be used for calibration. However, even if only one of the gases is normally used, calibration using both gases should be done at least once.

The zero gas normally used has an oxygen concentration of 0.95 to 1.0 percent oxygen by volume with a balance of nitrogen gas (N_2). The span gas widely used is clean air (at a dew-point temperature below -20°C and free of oily mist or dust, as in instrument air).

For best accuracy, as the span gas use oxygen whose concentration is near the top of the measurement range, in a nitrogen mixture.

Shipping-time default setting for zero gas is 1.0% O_2, and for span gas is 21.0% O_2.

<Setting Procedure>

1) Touch the Setup key to switch to the [Execution/Setup] display.
2) Select [Maintenance] to display the Maintenance display.
3) From the Maintenance display, select [Calibration setup].
4) Select [Zero gas conc] and touch the Enter key to display the numerical entry display. Enter the oxygen concentration of the zero gas you plan to use. To enter a concentration of 0.98% O_2, enter 00098.
5) Select and set the Span Gas in the same manner.

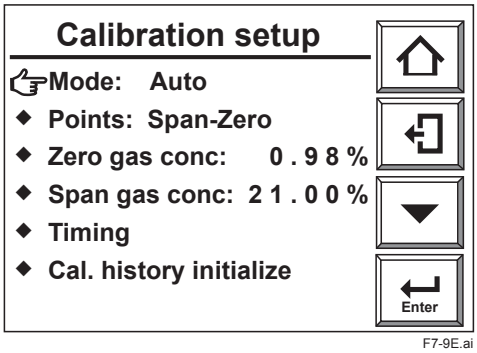

Figure 7.9 Calibration Setting

NOTE

If instrument air is used for the span gas, dehumidify the air by cooling to the dew point of -20°C and remove any oil mist or dust

7.9.2 Performing Manual Calibration

1) Confirm that the zero gas flow setting valve is fully closed, then adjust supply gas pressure to measurement gas pressure + 50kPa (but a maximum of 300 kPa) using the valve on the gas cylinder.
2) Touch the Setup key to switch to the [Execution/Setup] display.
3) Select [Calibration] and the Calibration display appears.
4) Select [Manual calibration] then touch the Enter key. The Channel Select display shown in Figure 7.10 appears.

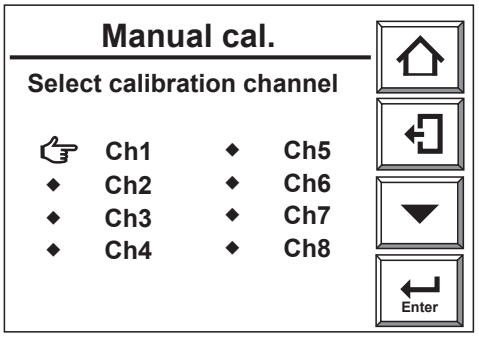

Figure 7.10 Channel Select for Manual Calibration

5) Select the channels to be calibrated (channels in warmup or error status can't be selected). Here we describe the situation for Channel 1.
6) Select [Span calibration] and touch the Enter key. A display like Figure 7.11 appears.

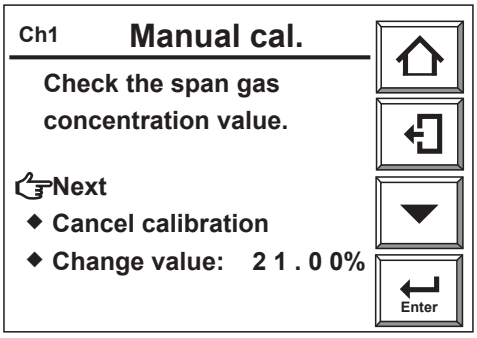

Figure 7.11 Span Calibration setup

7) Select [Next] and touch the Enter key. The display in Figure 7.12 appears. If wiring and piping for automatic calibration has been done, span gas will start flowing at this point.

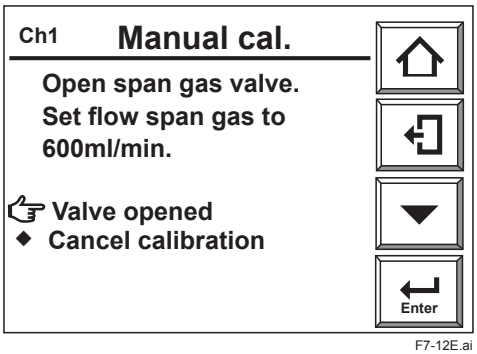

Figure 7.12 Span Calibration start

8) Open the span gas flow setting valve, and adjust flow to 600 ± 60 ml/min.

9) Select [Valve opened (Start Calibration)] and touch the Enter key. An oxygen concentration graph like Figure 7.13 is displayed, and [CAL.TIME] status mark flashes.
Wait for the graph measured value trace to stabilize. Calibration has not yet been performed, so it is not a problem if the displayed value is different from the correct value of span gas concentration.

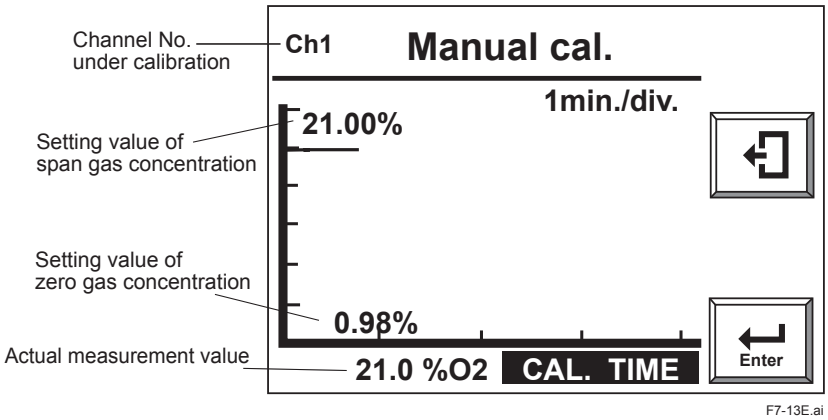

Figure 7.13 Display during calibration

10) When the graph trace stabilizes, touch the Enter key. The display changes to like Figure 7.14.
The measured value is adjusted to read the same as the span gas concentration set value, and a check mark appears in the check box beside Span calibration.
Close the span gas flow setting valve and tighten the lock nut used to prevent it from loosening during measurement.
Even if span calibration is executed, the span calibration will not be completed normally if a check mark is not placed in the [Span calibration] box on the Zero calibration Start Display shown in Figure 7.14. Even if zero calibration is executed subsequently, the results will not be applied.

11) Next perform zero calibration. Select [Zero calibration] and touch the Enter key.

12) Select [Next] and touch the Enter key.

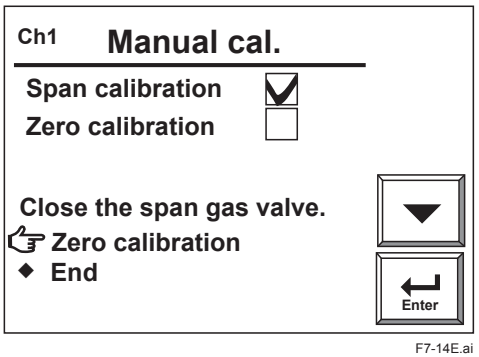

Figure 7.14 Zero calibration start display

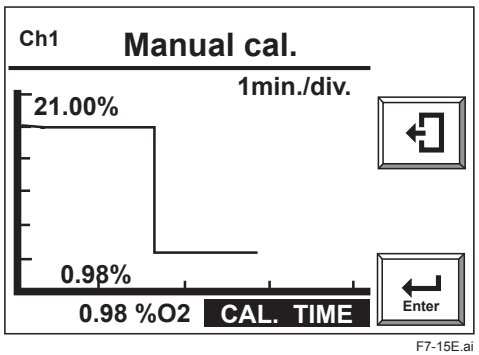

Figure 7.15 Display during calibration

13) Open the zero gas flow setting valve, and adjust flow to 600 ± 60 ml/min.

14) Select [Valve opened (Start Calibration)] and touch the Enter key. An oxygen concentration graph like Figure 7.15 is displayed, and [CAL.TIME] status mark flashes.
Wait for the graph measured value trace to stabilize. Calibration has not yet been performed, so it is not a problem if the displayed value is different from the correct value of zero gas concentration.

15) When the graph trace stabilizes, touch the Enter key. The display changes to like Figure 7.16. The measured value is adjusted to read the same as the zero gas concentration set value, and a check mark appears in the check box beside Zero calibration.
Close the zero gas flow setting valve and tighten the lock nut used to prevent it from loosening during measurement.

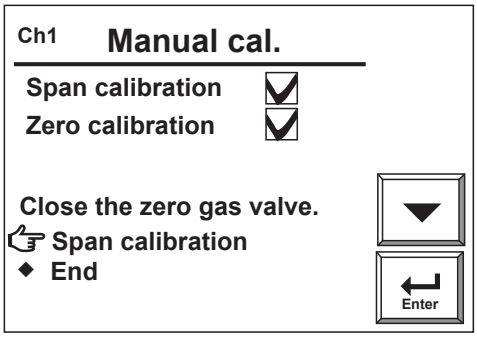

Figure 7.16 Calibration complete

16) Select [End] and touch the Enter key. The oxygen concentration graph is displayed and the [HOLD TIME] status mark appears. The graph trace changes gradually from zero gas concentration to sample gas concentration. During this “Output stabilization (settling) time” if “Output hold” is set, then the analog output is held at the corresponding preset value. For details of “Output hold” refer to “Subsection 8.1.2 Output Hold Setting”.
Shipping-time default setting is for stabilization (settling) time to be set to 3 minutes. After the stabilization (settling) time has elapsed then the display reverts to channel select (Figure 7.10) so that you can select another channel for calibration. If you touch the enter key during stabilization (settling) time then stabilization (settling) time is skipped and you are returned to the channel select display.

7.10 Analog Output Current Loop Check

After wiring the cables you can perform a loopback check to check if you can output a specified current from the analog output terminals.

1) Touch the Setup key to switch to the [Execution/Setup] display.
2) Select [Maintenance] and touch the Enter key.
3) From the Maintenance display select [mA-output loop check], and touch the Enter key.
4) The “mA-output loop check” channel-select display appears (Figure 7.17).

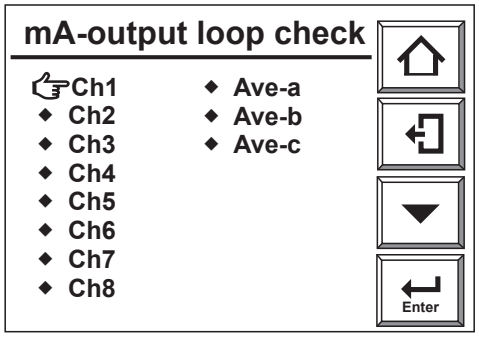

Figure 7.17 Analog output select

5) Select the Analog output to perform Loop check on, and touch the Enter key.

6) The numerical entry display appears. Set output current somewhere in the range 4 to 20 mA. Touching the Entry key outputs this current value.

7) Touching the Reject key (door with arrow) from the numerical entry display returns you to the "mA-output loop check" channel-select display.

8) You can then perform a loop check on other analog outputs in the same manner.

7.11 Checking Operation of Contact Input, Contact Output

After wiring the cables you can perform a contact I/O check to display the status of contact inputs and to check the operation of contact outputs including contact outputs to operate solenoid valves during automatic calibration.

7.11.1 Contact Output Operation Check

1) Touch the Setup key to switch to the [Execution/Setup] display.

2) Select [Maintenance] and touch the Enter key.

3) From the Maintenance display select [Contact check], and touch the Enter key.

4) The Contact check display shown in Figure 7.18 allows you to select contacts to check. To check the individual error contacts for channels 1 to 8, select [Output contact ch(Channel contact output)] or to select Function contacts (contacts 1 to 5) select [Output contact ctrl(Common contact outputs)].

5) Next the Contact no. select display is displayed. Select the contact you want to check, then touch the Enter key, and the [OFF] / [ON] selection window opens. Select then touch the Enter key to open or close the corresponding contact output.

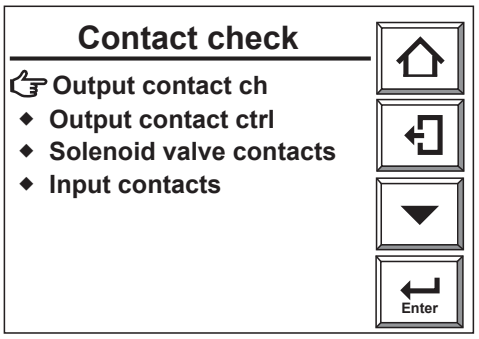

Figure 7.18 Contact check display

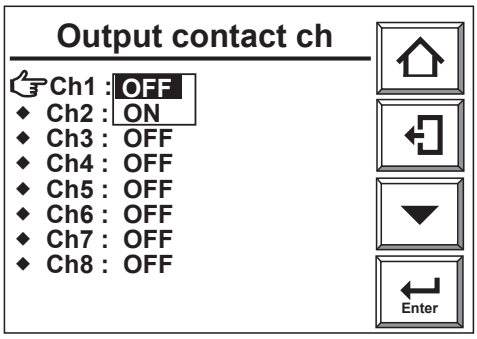

Figure 7.19 Contact select display

CAUTION

1) Individual error contacts do not operate if corresponding channel is not installed.

2) If you perform a Channel contact output Open / Close check then Error2 is generated. The reason is that Channel contact output is used as Sensor heater power safety switch, and this turns off power to the heater. If this error occurs, to reset it remove the channel card then reinsert it (hot swap functions), or turn power OFF then back ON.

7.11.2 Checking contacts used to operate solenoid valves during automatic calibration

1) From the Contact check display of Figure 7.18 select [Solenoid valve contacts]. From the corresponding Solenoid valve contacts select display of Figure 7.20 select the solenoid to check. To check the automatic calibration gas switching valve, select [Com].
Touching the Enter key opens the [Span] (Span valve open) / [Zero] (Zero valve open) selection window. Selecting an output and touching Enter key allows you to test Open / Close the corresponding solenoid valve.

2) To check a channel switching valve, select its channel [Ch1] through [Ch8] and touch the Enter key to open the [OFF] (valve closed) / [ON] (valve open) selection window.
Selecting an output and touching Enter key allows you to test Open / Close the corresponding solenoid valve.

NOTE

You cannot check a Channel Select valve if the corresponding Channel unit is not installed.

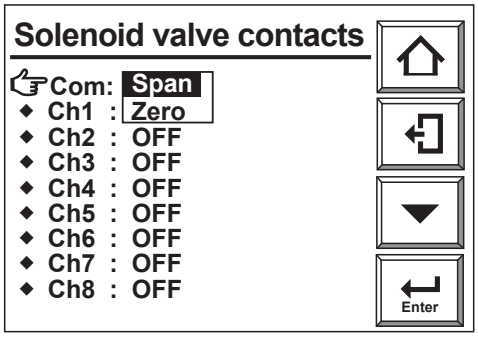

Figure 7.20 Solenoid valve contact selects

7.11.3 Checking Contact Inputs

1) From the Contact check display of Figure 7.18 select [Input contacts] then touch the Enter key. The display of Figure 7.21 appears.

2) The input contact status [Open] or [Closed] is displayed in real time.

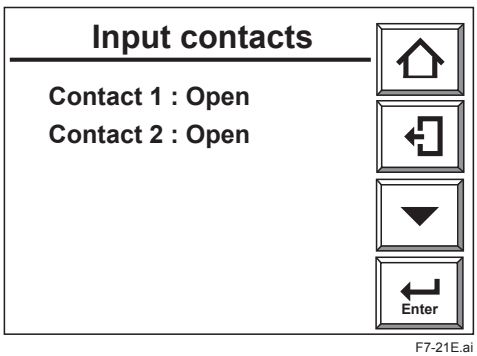

Figure 7.21 Contact input check

8. Setting Operating Parameters - Detail, and Examples

8.1 Setting Analog Outputs

8.1.1 Analog Output Range (Per-Channel)

The analog output range is defined by setting the oxygen concentration value corresponding to the range minimum oxygen concentration (corresponding to 4 mA output) and the oxygen concentration value corresponding to the range maximum oxygen concentration (corresponding to 20 mA output). For each channel the range settings can be set independently. You can have two ranges for each output, switched by contact input: Contact OFF results in Range 1, and contact ON results in range 2. For details, refer to Section 8.4 Setting Contact Inputs. Factory default setting is 0 to 25% O_2 for all ranges.

<Setting Procedure>

1) Touch the Setup key, and the [Execution/Setup] display appears.
2) From the [Commissioning] display select [mA-output setup] then [Set range]. (See Figure 8.1).
3) Use [◀] and [▶] keys to select the channel.
4) Set [min] O_2 concentration corresponding to 4 mA output, then set [max] O_2 concentration corresponding to 20 mA output (select, then touch the Enter key).
5) The numeric data entry display shown in Figure 8.2 appears; enter the desired oxygen concentration setting. To set 10% O_2, input [010] and touch the Enter key.
6) As necessary, repeat for averaging output a, b and c and other channels.

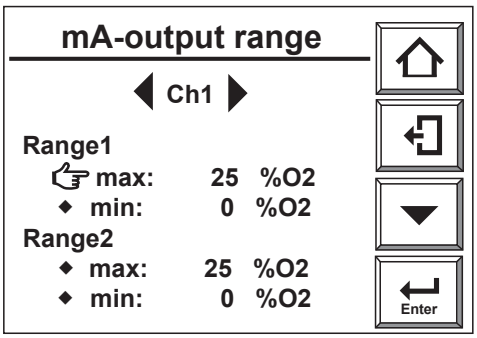

Figure 8.1 Current-output range

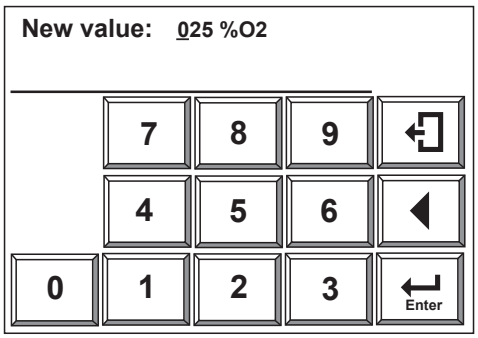

Figure 8.2 Numerical entry

<Permissible Setting Range>

The range low and high values are restricted as follows:

The range min. O_2 concentration value (corresponding to 4 mA output) can be set to either 0% O_2 or in the range 6 to 76% O_2.

The range max. O_2 concentration value (corresponding to 20 mA output) can be set to any value in the range 5 to 100% O_2, however the range max. setting must be at least 1.3 times the range min. setting.

If you do not observe this restriction, the measurement will be invalid, and any previous valid value will be used. The gray area in figure represents the valid setting range.

Setting example 1: If the range minimum (corresponding to 4 mA output) is set to 10% O_2 then range maximum (corresponding to 20 mA output) must be at least 13% O_2.

Setting example 2: If the range minimum (corresponding to 4 mA output) is set to 75% O_2 then range maximum (corresponding to 20 mA output) must be at least 75x1.3=98% O_2 (rounding decimal part up).

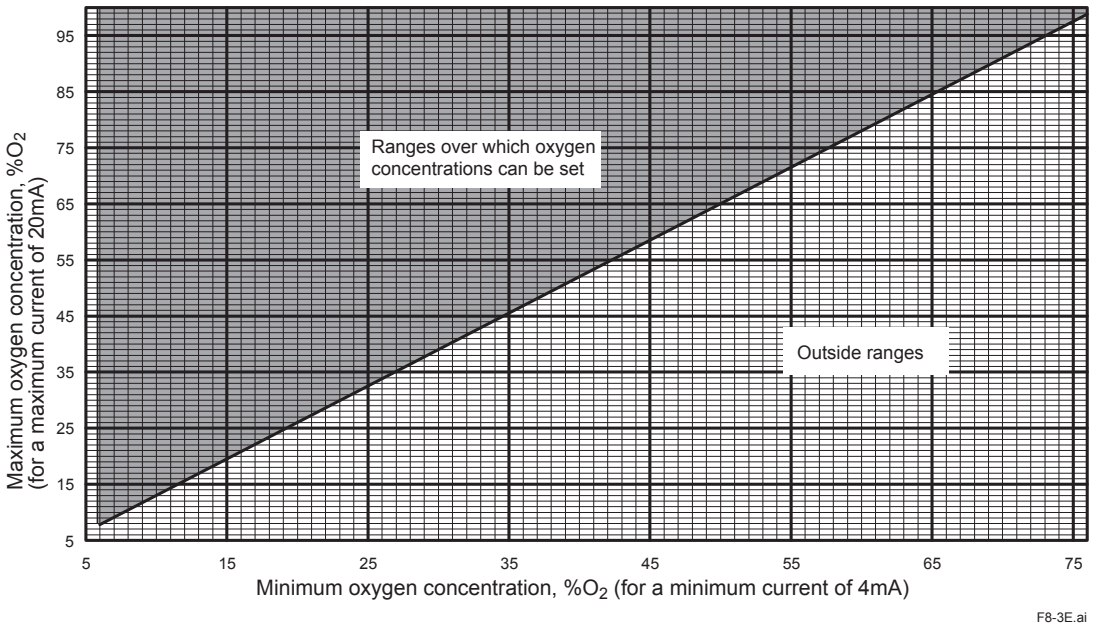

Figure 8.3 Minimum-Maximum setting range of oxygen concentration

< Default setting>

Both range 1 and the second range range 2 are set to 0 to 25% O_2 prior factory shipment.

8.1.2 Setting Output Hold (Applies to All Outputs)

During warmup, during calibration, and when an error occurs, output hold status applies: the analog output is held at a preset value. In this instrument, the permissible hold values which may be set are shown in Table 8.1 . The hold setting applies to the outputs of all channels.

[Warmup], [Calibration / Indication check / Blow back], or [Error] statuses may occur independently for each channel; only the outputs of any channels in these statuses are in [HOLD] status. However the [Error] status, [Control Card Abnormal], causes *all* the individual channel outputs and *all* the averaging outputs to be in [HOLD] status. Both [(Under) Maintenance] and [Process Gas Alarm] statuses also apply to the whole system and cause *all* the individual channel outputs and *all* the averaging outputs to be in [HOLD] status.

“Averaging Group Invalid” status applies to individual averaging groups;
it means that either no channels are assigned to an averaging group, or that the status of all channels in the averaging group is set to “disabled”; and the output of groups in this status will be in HOLD status.

CAUTION

[Disable] means setting channel card power “OFF” so that card may be swapped. Refer to “Section 11.2 Hot Swap Function”.

Table 8.1

Valid output hold values / Status	4mA	20mA	Don’t hold	Hold last value	Preset value (2.4-21.6mA)
Warmup, Purging	○	○			○
(Under) Maintenance			○	○	○
(Under) Calibration Indication Check Blow back			○	○	○
Process Gas Alarm				○	○
Error			○	○	○
Averaging Group Invalid	○	○			○

< Definition of Statuses >

1) Warmup period, Purging

Warmup period means the status from power on until cell temperature stabilizes at 750° C and the instrument switches to measurement mode. The basic panel display shows cell temperature during warmup period.

“Purging” is the passing of calibration gas through the calibration gas piping before warmup, to remove any condensate in the piping. Refer to Section 10.6 Purging. Warmup does not start until after purging ends.

2) (Under) Maintenance

“Under maintenance” is the time that starts when you move to the [Execution/Setup] display by touching the Setup key on the basic panel display and ends when you return to the basic panel display. It includes when you operates keys on lower level menu displays of the [Execution/Setup] display.

3) (Under) Calibration

For Manual Calibration

"Under calibration" is the time that starts when you move to the [Manual cal.] display (Figure 8.4) from the Calibration display, lasts while you are operating keys for performing calibration manually, and ends when you press the End key and after a preset hold time has elapsed.

For Semi-Automatic Calibration

When calibration is started from the Calibration display, "under calibration" is the time that starts when you touch the Enter key on the [Semi-auto cal.] display with Start calibration selected (Figure 8.5), lasts while calibration is being performed, and ends after a preset hold time has elapsed.

When calibration is started by a contact input, calibration is performed for all installed channels. "Under calibration" is the time that starts when calibration is started by the contact input, lasts while calibration is being performed sequentially, and ends after a preset hold time for the last calibrated channel has elapsed.

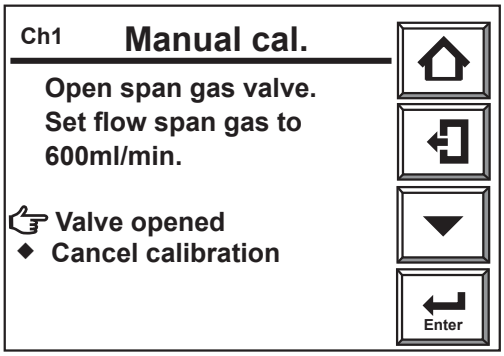

Figure 8.4 Manual Calibration display

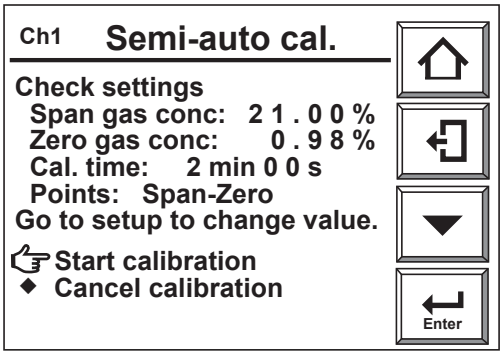

Figure 8.5 Semi-Automatic Calibration display

For Automatic Calibration

"Under calibration" is the time that starts when calibration is started at a preset timing, lasts while calibration is being performed sequentially, and ends after a preset hold time for the last calibrated channel has elapsed.

4) Under Indication Check

For Manual Indication Check

"Under indication check" is the time that starts when you move to the [Manual ind. check] display (Figure 8.6) from the Indication check display, lasts you operating keys for performing indication check manually, and ends when a preset hold time has elapsed.

For Semi-Automatic Indication Check

When indication check is started from the [Indication check] display, "under indication check" is the time that starts when you touch the Enter key on the [Semi-auto ind. chk] display with Start ind. check selected (Figure 8.7), lasts while indication check is being performed, and ends after a preset hold time has elapsed.

When indication check is started by a contact input, indication check is performed for all installed channels. "Under indication check" is the time that starts when indication check is started by the contact input, lasts while indication check is being performed sequentially, and ends after preset hold time for the last checked channel has elapsed.

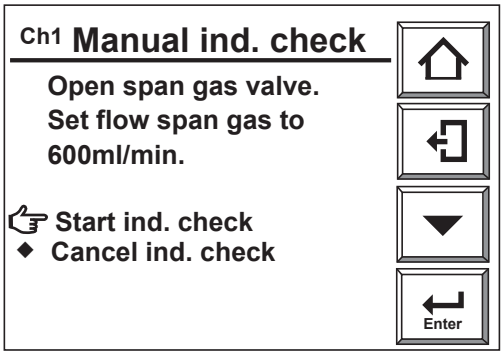

Figure 8.6 Manual Indication Check

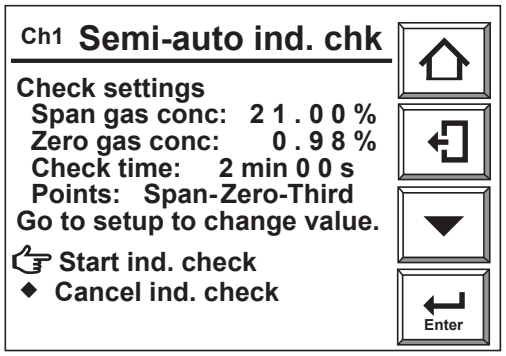

Figure 8.7 Semi-Automatic Indication Check

For Automatic Indication Check

"Under indication check" is the time starts when indication check is started at a preset timing, lasts while indication check is being performed sequentially, and ends after a preset hold time for the last checked channel has elapsed.

5) During Blow back

For Semi-Automatic Blow back

When blow back is started from the Blow back display, "during blow back" is the time that starts when you touch the Enter key on the Blow back display with Start blow back selected (Figure 8.8), lasts while blow back is being performed for all installed channels, and ends after a preset hold time has elapsed.

When blow back is started by a contact input, "during blow back" is the time that starts when blow back is started by the contact input, lasts while blow back is being performed sequentially for all installed channels, and ends after a preset hold time for the last performed channel has elapsed.

For Automatic Blow back

"During blow back" is the time that starts when blow back is started at a preset timing, lasts while blow back is being performed sequentially, and ends after a preset hold time for the last performed channel has elapsed.

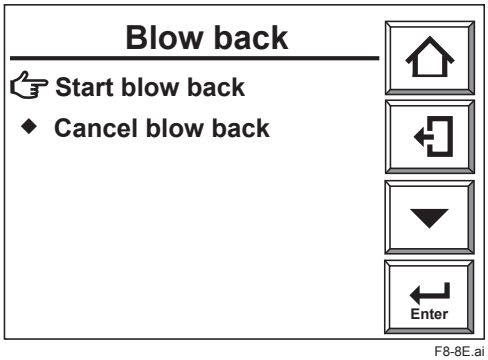

Figure 8.8 Blow back display

6) Process Gas Alarm

Process gas alarm status lasts from when a contact input representing the process gas alarm occurs until the input turns off.

7) Error

Error status exists from when the error occurs until it is cleared.

8) Averaging group invalid

When no channels are assigned to an averaging group, or when the statuses of allocated channels are “Disabled”, “Error”, “Warmup” or the like, so that no valid channel average value can be calculated.

<Output Hold status priority order>
When several different statuses that result in Output Hold occur, the following priority applies:

For individual channels outputs
Priority 1 Error status
Priority 2 Process Gas Alarm
Priority 3 Calibration, Indication Check, or Blow back
Priority 4 (Under) Maintenance
Priority 5 Warmup

For averaging outputs
Priority 1 Process Gas Alarm
Priority 2 (Under) Maintenance
Priority 3 Averaging Group Invalid

<Parameter Setting Procedure>

1) From “mA-output setup” on the [Commissioning] display, select “Set output hold” and touch the Enter key. A display like Figure 8.9 is displayed.
2) Select an item you want to change, and touch the Enter key.
3) In the selection window that appears, select the desired Hold method and touch the Enter key.
4) Select other items as desired and set as desired, as in the previous step. If you select Preset Value then you can set a current output value.
5) Touch the Reject key to return to the “mA-output hold” display.
6) If you select [Preset value] and touch the Enter key then the display shown in Figure 8.10 appears.
7) Selecting a preset setting and touching the Enter key displays the numeric entry display, allowing you to enter a preset current in the range 2.4 mA to 21.6 mA.

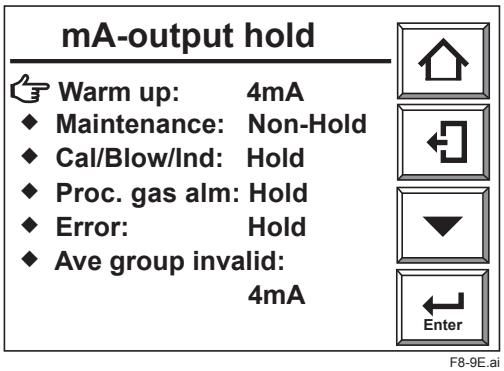

Figure 8.9 Current output hold

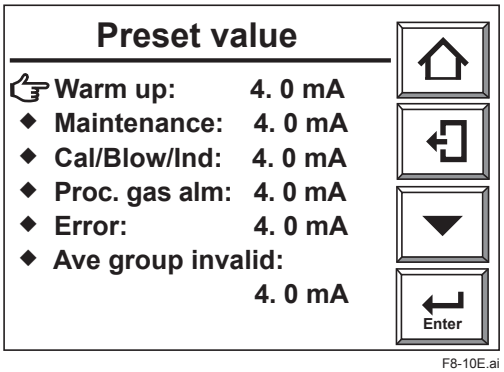

Figure 8.10 Preset value setting

<Default setting>
Output hold settings are set to defaults in Table 8.2 prior factory shipment or after data initialization.

Table 8.2 Defaults for output hold and preset values

Status	Output hold value	Preset value
Warmup, Purging	4mA	4mA
(Under) Maintenance Hold last	Hold last value	4mA
(Under) Calibration	Hold last value	4mA
Indication Check		4mA
Blow back		4mA
Process Gas Alarm	Hold last value	4mA
Error	Hold last value	4mA
Averaging Group Invalid	4mA	4mA

8.1.3 Setting Output Smoothing Coefficient (Applies to All Analog Outputs)

When the oxygen concentration in the sample gas fluctuates rapidly, if the measured value is used for control this can lead to problems with undesirable frequent ON/OFF switching. You can set an output smoothing coefficient (time constant) of between 0 and 255 seconds to reduce the effect. A single time constant setting applies to all analog outputs.

<Setting Procedure>

1) From “mA-output setup” on the Commissioning display, select “Output damping” and touch the Enter key. A numerical data entry display is displayed.
2) To set 30 sec., enter 030 and touch the Enter key.

<Default setting>

Factory default setting is 0 sec. (no smoothing).

8.1.4 Setting Output Mode (Applies to All Analog Outputs)

You can select whether the relationship between the measured oxygen concentration and the analog output signal be linear or logarithmic. The same setting applies to all analog outputs.

<Setting Procedure>

1) From “mA-output setup” on the Commissioning display, select “Output mode” and touch the Enter key.
2) A selection window appears, allowing you to select “Linear” or “Log”. Touch the Enter key to confirm.

<Default setting>

Output mode is set to Linear prior factory shipment or after data initialization.

CAUTION

If you select an output mode of “logarithmic” then regardless of range setting the minimum output value becomes 0.1% O_2 fixed.

8.2 Setting Oxygen Concentration Alarms

You can set four oxygen concentration alarm settings: High High (HH), High (H), Low (L) and Low Low (LL). If an alarm occurs while the basic panel display is displayed then an alarm mark appears on the display, and at the same time the oxygen concentration display color of the channel in alarm status turns orange. An orange status display lamp also lights at the top of the corresponding channel card. If the function contact outputs are allocated to alarms then the corresponding contact output also occurs. Here we explain how to set this alarm action.

8.2.1 Setting the Alarm Values (Individual Settings)

The alarm values can be set individually for all channels and for all averaging groups.

1) High High (HH) and High (H) alarms
   An alarm occurs when the measured value is bigger than the alarm limit. The alarm settings can be in the range 0 to 100% O_2. However you need to enable each alarm set point (HH, H) by setting it to “ON” rather than “OFF”.

2) Low (L) and Low Low (LL) alarms
   An alarm occurs when the measured value is smaller than the alarm limit. The alarm settings can be in the range 0 to 100% O_2. However you need to enable each alarm set point (LL, L) by setting it to “ON” rather than “OFF”.

8.2.2 Alarm Delay Time and Hysteresis (Applies to All Alarm Settings)

If the measured oxygen concentration fluctuates between the normal value and the alarm setting then alarm status will keep turning ON and OFF. You can reduce this annoyance by setting alarm action delay and hysteresis.

Delayed alarm action prevents immediate alarm output after measurement value goes outside an alarm limit; alarm status is entered only if the alarm stays outside the limit for the delay time. The delay time also affects release of alarm status.

The effect of hysteresis is similar-delaying alarm action and release-except that it is an offset value rather than a time: to release an alarm, the alarm has to move (the hysteresis value) inside the alarm setting. You can combine delay with hysteresis to both minimize spurious alarms and lengthen brief (but valid) alarm output.

The action of delay and hysteresis are illustrated in Figure below. Alarm delay and hysteresis settings apply to all alarm settings for all channels and all averaging groups.

A . Although the measured value exceeds the high alarm setting, within the delay time of 5 sec., it falls within (alarm setting ― hysteresis) so no alarm is output.

B. The measured value stays outside the alarm setting for longer than the delay time, so an alarm is output, delayed by the delay time.

C . Although the measured value falls within (alarm setting ― hysteresis) it does not stay there for the delay time, so the alarm is not released.

D. After the measured value falls within (alarm setting ― hysteresis) and stays there for the delay time, the alarm is released.

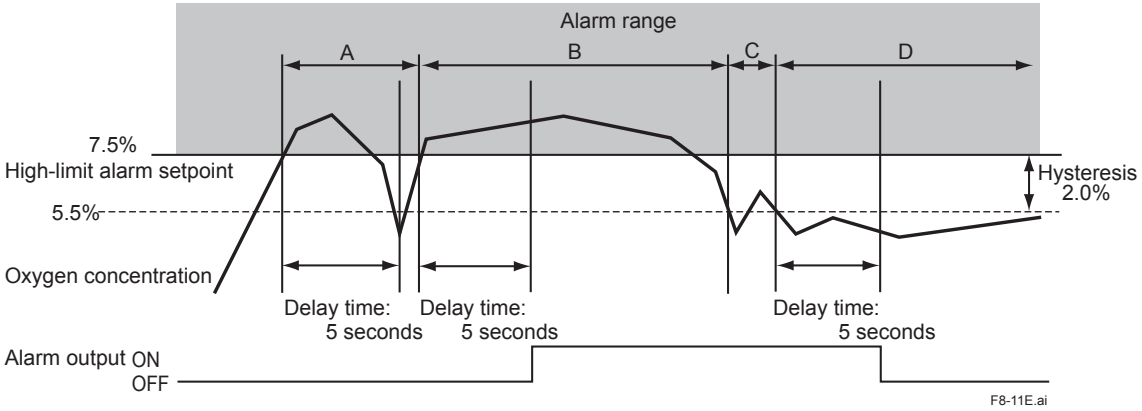

Figure 8.11 Alarm Output Action with Delay and Hysteresis

Figure 8.11 shows an example with high alarm setting of 7.5% O_2, alarm delay of 5 sec., and hysteresis of 2% O_2.

<Setting procedure>

1) From basic panel display touch Setup key, and the [Execution/Setup] display appears.
2) Select [Commissioning] --> [Alarm setup] and the Alarm setup display (Figure 8.12) appears.

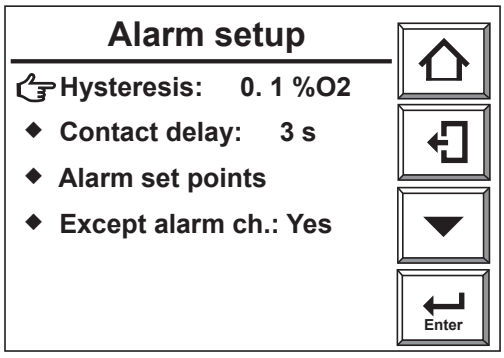

Figure 8.12 Alarm setting

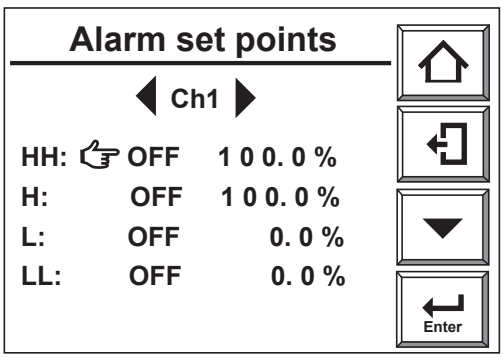

Figure 8.13 Alarm setting

Setting Alarm Hysteresis

3) From the [Alarm setup] display select [Hysteresis]. A numeric entry display appears for you to enter the hysteresis value. The units are 0.1% O_2. To enter 2.5% O_2 enter 25. You can enter a hysteresis setting in the range 0 to 9.9% O_2.

Setting Alarm Delay Time

4) From the [Alarm setup] display select [Contact delay]. The numeric entry display is displayed for you to enter Alarm Action Delay time. Units are seconds. To set 3 sec., enter 003. You can set delay time in the range 0 to 255 sec.

Alarm value setting

5) From the [Alarm setup] display select [Alarm set points] and the display shown in Figure 8.13 appears.
6) Use the Channel Select arrow keys to select a channel to set.
7) Enable any alarms you want to use. To use the High alarm, select H and a window to allow you to select OFF or ON appears. Select ON to enable the High alarm setting.

8) To set the High Alarm setting value, use the pointer key to move the pointer to the value, then touch the Enter key. The numeric entry display appears so you can enter a value in units of 0.1% O_2. To enter the value 10% O_2, enter 0100. You can set other alarms in a similar way.

To remove channels in alarm status from the associated Averaging Group

9) From the [Alarm setup] display select [Except alarm ch.] and touch the Enter key.

10) A Yes / No selection window appears.

<Default setting>

Alarm settings are set to defaults in Table 8.3 prior factory shipment or after data initialization.

Table 8.3

Item	Default
Hysteresis	0.1% O_2
Delay time	3 sec.
High High (HH) Alarm	OFF
High High Alarm Setting	100% O_2
High (H) Alarm	OFF
High Alarm Setting	100% O_2
Low (L) Alarm	OFF
Low Alarm Setting	0% O_2
Low Low (LL) Alarm	OFF
Low Low Alarm Setting	0% O_2

CAUTION

If an alarm setting is OFF then the alarm is disabled. You need to turn alarms ON to enable them.

8.3 Setting Contact Outputs

The averaging converter provides the following outputs:

1) "Function" contact outputs (DO1~DO4): Function can be allocated by user.
2) Common (representative) error contact (DO5): Represents an error in any channel.
3) Individual channel error contacts (DO-CH1~DO-CH8): Individual channel error outputs, one per channel.

For details of errors, refer to Section 12.1 Displays and Remedies When Errors Occur.
Each contact output is Form C (transfer contact) with three terminals: COM / NC / NO (COM=common, NC=Normally Closed, NO=Normally Open) using a mechanical relay with non-wetted contacts. Ensure that contact rating is not exceeded.

The four function-specific contact outputs can be programmed to be normally operated (NC or NO selectable). For safety the error contacts are factory fixed to be normally closed. How to assign conditions to function contact outputs is described below. Table 8.4 shows the conditions that can be assigned to function-specific contacts.

Table 8.4 Conditions that can be allocated to function-specific contacts

Item		Condition for contact output
Alarms	High High Alarm	If ON then High High alarm results in contact output. However, High High alarm must be ON (enabled). Refer to Section 8.2 Setting Oxygen Concentration Alarms.
	High Alarm	If ON then High alarm results in contact output. However, High alarm must be ON (enabled). Refer to Section 8.2 Setting Oxygen Concentration Alarms.
	Low Alarm	If ON then Low alarm results in contact output. However, Low alarm must be ON (enabled). Refer to Section 8.2 Setting Oxygen Concentration Alarms.
	Low Low Alarm	If ON then Low Low alarm results in contact output. However, Low Low alarm must be ON (enabled). Refer to Section 8.2 Setting Oxygen Concentration Alarms.
	CAL Coefficient Alarm	If ON then calibration-time Zero coefficient error, Span coefficient error, or an electrode potential stability error results in contact output.
	CAL Gas Pressure Low	If ON then a contact input indicating calibration gas pressure low results in contact output. This is a calibration gas pressure low answerback signal. Corresponding contact input must be allocated to calibration gas pressure low.
	Process Gas Alarm	If ON then a contact input indicating process gas pressure alarm results in contact output. This is a process gas pressure alarm answerback signal. Corresponding contact input must be allocated to process gas pressure alarm.
	Temperature Alarm	If ON then if internal temperature of averaging converter is over limit, contact output occurs. When the converter is used under severe environmental temperature conditions, you can use this contact to switch on a cooler.
	Error	If ON then any type of error causes contact output. Acts the same as common error contact.
Other statuses	Warmup	If ON then during warmup there is contact output. For definition of warmup, see Subsection 8.1.2 Setting Output Hold.
	Output Range Switching	If ON then while contact-input range-switching signal is detected,then there is contact output. This is a range-switching input answerback signal. Corresponding contact input must be allocated to measurement range switching.
	Maintenance	If ON then while (under) maintenance there is contact output. For definition of (under) maintenance, see Subsection 8.1.2 Setting Output Hold.
	Calibration	If ON then while (under) calibration there is contact output. For definition of (under) calibration, see Subsection 8.1.2 Setting Output Hold.
	Indication Check	If ON then during indication check there is contact output. For definition of indication check, see Section 10.4 Indication Check.
	Blow back	If ON then there is Blow back switch contact output. For definition of blow back, see Section 10.5 Blow back.
	3rd Check Gas	If ON then during indication check, there is contact output to operate 3rd Check Gas solenoid valve. For definition of indication check, see Section 10.4 Indication Check.

< Setting Procedure >

1) Touch the Setup key, and the [Execution/Setup] display appears.
2) From [Commissioning] select [Contact setup] and touch the Enter key.
3) Select [Output contact no.] to set up and touch the Enter key.
4) Select [Alarms] or [Others] and touch the Enter key. You can set the condition(s) allocated to contact output. (Figure 8.14).
5) Select ON/OFF pulldown to set items ON and allocate the corresponding condition to contact output. You can allocate multiple conditions to a contact output, then if any of the conditions is true there will be contact output.

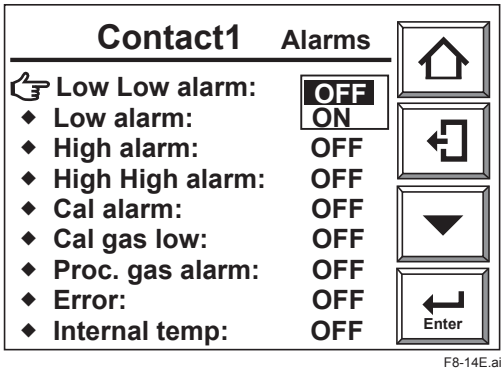

Figure 8.14 Alarm Function Allocation

<Default setting>

Contact output setting are set to defaults in Table 8.5 prior factory shipment or after data initialization.

Table 8.5 Contact function initial defaults

	Item	Contact output 1	Contact output 2	Contact output 3	Contact output 4
Alarms	High High Alarm				
	High Alarm			ON	
	Low Alarm			ON	
	Low Low Alarm				
	CAL Coefficient Alarm				
	CAL Gas Pressure Low				
	Process Gas Alarm				
	Temperature Alarm				
	Error				
Other statuses	(Under) warmup	ON			
	Output Range Switching				
	(Under) Calibration		ON		
	(Under) Indication check				
	(Under) Maintenance				
	Blow back				
	3rd Check Gas				
	Normally Closed/Open	N.O.	N.O.	N.O.	N.O.

8.4 Setting Contact Inputs

External contact inputs allow remote operation of the following functions shown in Table 8.6 .

Table 8.6 Contact Input Functions

Item	Function
Output Range Switching	While contact signal is applied, output range 2 is selected and [Range] is displayed on the display. See Figure 8.15.
CAL Start	Contact input starts Semi-Automatic Calibration. Calibration Mode setting must be [Semi-Auto] or [Auto]. Contact signal must be applied for at least 1 sec. Even if input signal continues to be applied, calibration is not repeated unless contact input is released then reapplied.
Indication Check Start	Contact input starts Semi-Automatic Indication Check. Indication Check setting must be [Semi-auto] or [Auto]. Contact signal must be applied for at least 1 sec. Even if input signal continues to be applied, Indication Check is not repeated unless contact input is released then reapplied.
Blow back Start	Contact input starts Blow back. Contact signal must be applied for at least 1 sec. Even if input signal continues to be applied, Blow back is not repeated unless contact input is released then reapplied.
CAL Gas Pressure Low	Contact input disables Semi-Auto or Auto Calibration.
Process Gas Alarm	While contact signal is input, for safety reasons heater power is turned off. When contact input is released, heater power is reapplied and warmup begins. When warmup ends then Measuring mode starts

<Setting Procedure>

This setting example shows how to set “When contact input 1 Opens, Start Semi-Auto Calibration”.

1) From the panel basic display touch Setup key, and the [Execution/Setup] display appears.
2) Select [Commissioning] and the Commissioning display appears.
3) Select [Contact setup] then [Input contacts].
4) Select [Input 1] . Function Selection window (Figure 8.16) appears.
5) Select [Calibration start].
6) For [Input func. is active at] select (operate if) [Closed]. (You can select Open or Close).
7) Change [Close] to [Open].

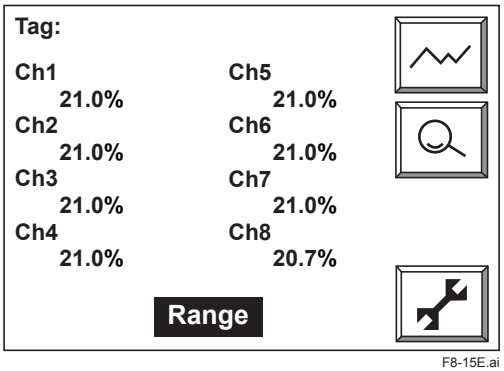

Figure 8.15 During Range Switching

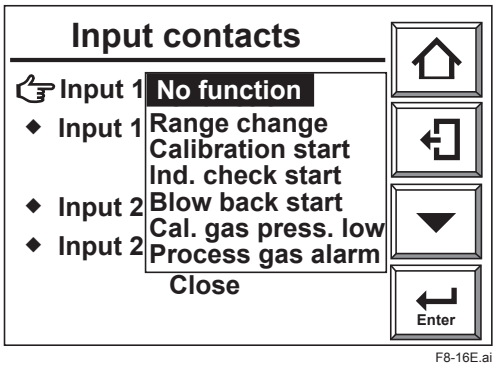

Figure 8.16 Contact Input Setting display

<Default setting>

All contact inputs are set to [No function](disabled) prior factory shipment or after data initialization.

8.5 Other Settings

8.5.1 Date and Time

Here we explain how to set date and time. Date and time setting are used for Auto Calibration and Auto Indication Check, also Auto Blow back Start time.

<Setting Procedure>

1) From the basic panel display if you touch the Setup key, the [Execution/Setup] display appears.
2) Select [Commissioning] and the Commissioning display appears.
3) Select [Others] and the display of Figure 8.17 appears.
4) Select [Clock] and the display of Figure 8.18 appears.
5) Select [Set date] and the numerical entry display appears. To enter June 21. 2004 , enter [210604]. Touch the Enter key and you revert to the display of Figure 8.17.
6) Select [Set time]. Enter the time in 24-hour format. To set 2:30 pm, enter [1430] on the numerical display and touch the Enter key. The clock starts from 00 seconds.

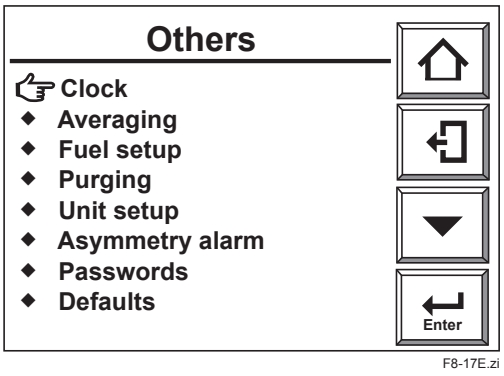

Figure 8.17 Others setting display

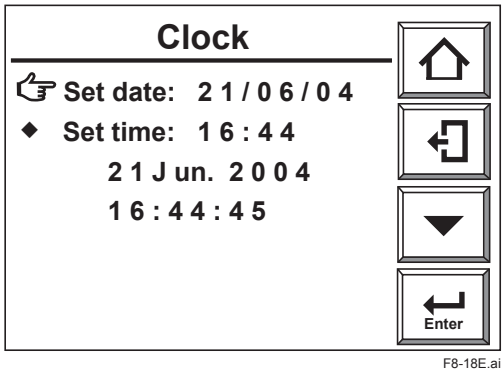

Figure 8.18. Day and Time setting

8.5.2 Average Value / Max. and Min. Monitoring Time

This instrument can compute and display Average, Max. and Min. Oxygen concentrations in a specified time interval. The Average, Max. and Min. can apply to each channel and to averaging outputs a, b and c. Here we explain how to set the time interval for averaging, and for monitoring for Max./Min.

<Setting Procedure>

1) From the panel basic display touch Setup key, and the [Execution/Setup] display appears.
2) Select [Commissioning] and the Commissioning display appears.
3) Select [Others] then [Averaging]. The display of Figure 8.19 appears.
4) Select “Set period over which average is calculated” and numerical entry display appears. To set 3 hours, enter 003. Entry range is 1 to 255 hours.
5) Select “Set period over which maximum and minimum is stored” and numerical entry display appears. To set 48 hours, enter 048. Entry range is 1 to 255 hours.

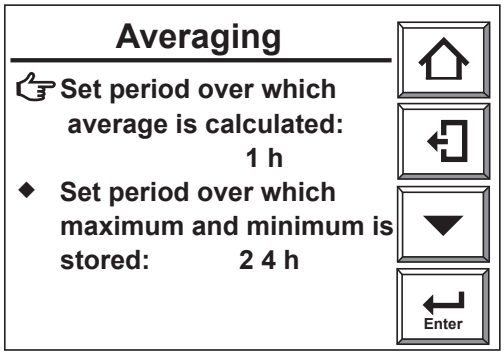

Figure 8.19 Average / Max. / Min. Setup

<Default setting>

[Set period over which average is calculated] is set to 1hr, and [Set period over which maximum and minimum] is stored is set to 24 hours prior factory shipment or after data initialization.

8.5.3 "Fuel" Setup: Humid Exhaust Gas or "Dry" Equivalent Oxygen Content

This instrument can convert between "humid" gas measurements and "dry" equivalents:

$$Y_{dry} = \frac{y}{100 - H_{gas}} \times 100\ (\%)$$

H_{gas} : Water content of sample gas $\%H_2O$
Y_{dry} : Dry oxygen equivalent ($\%O_2$)
Y : Oxygen concentration in moist gas ($\%O_2$)

To convert between "humid" and "dry" gas measurements, the water content H gas is computed. To compute the water content, four parameters Ao, Gw, X and Z are required, and the following expression is used:

$$\text{Moisture quantity} = \frac{\overbrace{\text{(water vapor caused by combustion and water vapor contained in the exhaust gas)}}^{\text{+ (water vapor contained in air for combustion)}}}{\text{actual exhaust gas (including water vapor) per fuel}} \times 100 \quad \text{..... Equation 1}$$

$$= (Gw + Gw1)/G \times 100$$

$$= \frac{Gw + (1.61 \times Z \times m \times Ao)}{Go + Gw + [(m - 1)\,Ao + (1.61 \times Z \times m \times Ao)]} \times 100 \quad \text{..... Equation 2}$$

$$\fallingdotseq \frac{\boxed{Gw} + (1.61 \times \boxed{Z} \times m \times \boxed{Ao})}{\boxed{X} + \boxed{Ao} \times m} \times 100$$

where,

Ao: Theoretical amount of air per unit quantity of fuel, m^3/kg (or m^3/m^3) ... ② in Table 8.7

G: Actual amount of exhaust gas (including water vapor) per unit quantity of fuel, m^3/kg (or m^3/m^3)

Gw: Water vapor contained in exhaust gas per unit quantity of fuel (by hydrogen and moisture content in fuel), m^3 /kg (or m^3/m^3) ..... ① in Table 8.7

Gw1: Water vapor contained in exhaust gas per unit quantity of fuel (moisture content in air), m^3 /kg (or m^3/m^3)

Go: Theoretical amount of dry exhaust gas per unit quantity of fuel, m^3/kg (or m^3/m^3)

m: Air ratio

X: Fuel coefficient determined depending on low calorific power of fuel, m^3/kg (or m^3/m^3) ..... ③ in Table 8.7

Z: Absolute humidity of the atmosphere, kg/kg ..... Figure 8.16

Fill in the boxes with fuel parameters in Equation 2 above to calculate the moisture content. Use Ao, Gw and X shown in Table 8.7. If there are no appropriate fuel data in Table 8.7, use the following equations for calculation. Find the value of "Z" in Equations 1 and 2 using Japanese Standard JIS B 8222 etc. If a precise measurement is not required, obtain the value of "Z" using a graph for the absolute humidity indicated by a wet and dry bulb hygrometer (Figure 8.20).

- For liquid fuel

Amount of water vapor in exhaust gas (Gw) = (1/100) {1.24 (9h + w)} (m^3/kg)

Theoretical amount of air (Ao) = 12.38 x (Hl/10000) – 1.36 (m^3/kg)

Low calorific power = Hl

X value = (3.37 / 10000) x Hx – 2.55 (m^3/kg)

where, Hl: low calorific power of fuel

h: Hydrogen in fuel (weight percentage)

w: Moisture content in fuel (weight percentage)

Hx: Same as numeric value of Hl

- For gas fuel

Amount of water vapor in exhaust gas (Gw) = (1/100) {(h2) + 1/2 ∑y (Cx Hy) + wv} (m^3/m^3)

Theoretical amount of air (Ao) = 11.2 x (Hl/10000) (m^3/m^3)

Low calorific power = Hl

X value = (1.05 / 10000) x Hx (m^3/m^3)

where, Hl: low calorific power of fuel

CxHy: Each hydrocarbon in fuel (weight percentage)

h2: Hydrogen in fuel (weight percentage)

wv: Moisture content in fuel (weight percentage)

Hx: Same as numeric value of Hl

- For solid fuel

Amount of water vapor in exhaust gas (Gw) = (1/100) {1.24 (9h + w)} (m^3/kg)

Theoretical amount of air (Ao) = 1.01 x (Hl / 1000) + 0.56 (m^3/kg)

Low calorific power = Hl = Hh – 25 (9h + w) (kJ/kg)

X value = 1.11 - (0.106 / 1000) x Hx (m^3/m^3)

where, w: Total moisture content in use (weight percentage)

h: Hydrogen content (weight percentage)

The average hydrogen content of coal mined in Japan, which is a dry ash-free type, is 5.7 percent. Accordingly, "h" may be expressed mathematically by:

h = 5.7 [{100 – (w + a)} / 100] x (100 – w) / (100 – w1)

where, a: Ash content (%)

w1: Moisture content (%), analyzed on a constant humidity basis

Hh: Higher calorific power of fuel (kJ/kg)

Hl: Low calorific power of fuel (kJ/kg)

Hx: Same numeric value of Hl

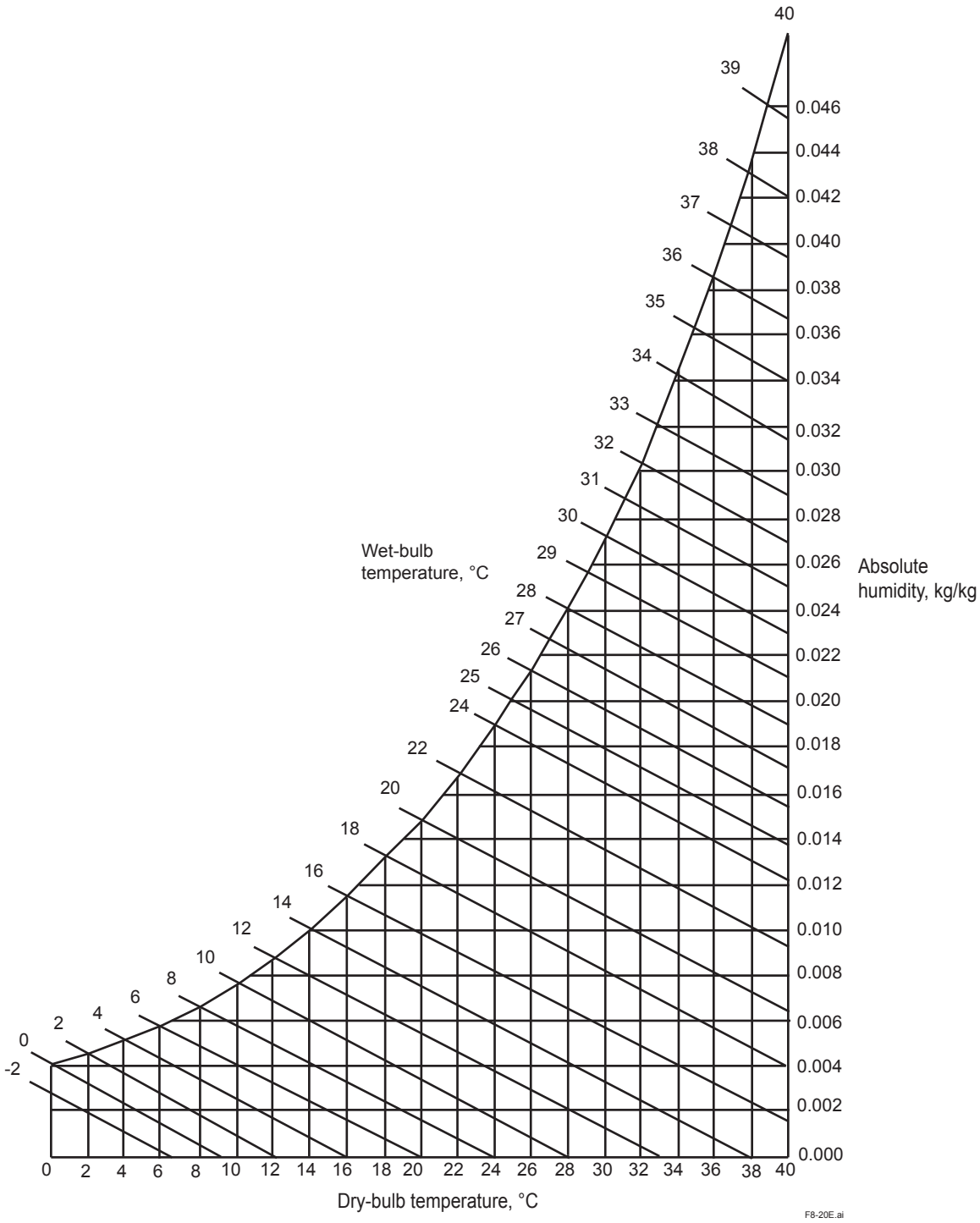

Figure 8.20 Absolute Humidity of Air

Table 8.7 Fuel Data

● For liquid fuel

Type \ Fuel properties			Specific weight kg/l	Chemical component (weight percentage)							Calorific power kJ/kg		Theoretical amount of air for combustion Nm^3/kg	Amount of combustion gas Nm^3/kg					X value
				C	H	O	N	S	W	Ash content	Higher order	Lower order		CO_2	H_2O	SO_2	N_2	Total	
Kerosene			0.78~0.83	85.7	14.0	—	—	0.5	0.0	0.0	46465	43535	11.4	1.59	1.56	0.00	9.02	12.17	0.96
Light oil			0.81~0.84	85.6	13.2	—	—	1.2	0.0	0.0	45879	43032	11.2	1.59	1.47	0.00	8.87	11.93	0.91
A	Heavy oil class 1	No.1	0.85~0.88	85.9	12.0	0.7	0.5	0.5	0.3	0.05	45544	42739	10.9	1.60	1.34	0.00	8.61	11.55	0.89
		No.2	0.83~0.89	84.6	11.8	0.7	0.5	2.0	0.4	0.05	45125	42320	10.8	1.58	1.32	0.01	8.53	11.44	0.86
B	Heavy oil class 2		0.90~0.93	84.5	11.3	0.4	0.4	3.0	0.5	0.05	43827	41274	10.7	1.58	1.27	0.02	8.44	11.31	0.77
C	Heavy oil class 2	No.1	0.93~0.95	86.1	10.9	0.5	0.4	1.5	0.5	0.1	43952	41441	10.7	1.61	1.22	0.01	8.43	11.27	0.79
		No.2	0.94~0.96	84.4	10.7	0.5	0.4	3.5	0.5	0.1	43116	40646	10.5	1.58	1.20	0.02	8.32	11.12	0.72
		No.3	0.92~1.00	86.1	10.9	0.5	0.4	1.5	0.6	0.1	43660	41190	10.7	1.61	1.22	0.01	8.43	11.27	0.77
		No.4	0.94~0.97	83.0	10.5	0.5	0.4	3.5	2.0	0.1	43032	40604	10.3	1.55	1.18	0.02	8.18	10.93	0.72
													②		①				③

● For gas fuel

Type \ Fuel properties	Specific weight kg/Nm^3	Chemical component (weight percentage)							Calorific power kJ/Nm^3		Theoretical amount of air for combustion Nm^3/m^3	Combustion product, Nm^3/m^3				X value
		CO	H_2	CO_2	CH_4	C_mH_n	O_2	N_2	Higher order	Lower order		CO_2	H_2O	N_2	Total	
Coke oven gas	0.544	9.0	50.5	2.6	25.9	3.9	0.1	8.0	20428	18209	4.455	0.45	1.10	3.60	5.15	0.46
Blast furnace gas	1.369	25.0	2.0	20.0	—	—	—	53.0	3391	3349	0.603	0.45	0.02	1.01	1.48	0.08
Natural gas	0.796	—	—	2.0	88.4	3.2	1.6	4.2	37883	34074	9.015	0.98	1.88	7.17	10.03	0.86
Propane	2.030	C_3H_8 90%, C_4H_{10} 10%							102055	93976	24.63	3.10	4.10	19.5	26.7	2.36
Butane	2.530	C_3H_8 10%, C_4H_{10} 90%							125496	115868	30.37	3.90	4.90	24.0	32.8	2.91
(Gases)		(Molecular Formula)														
Oxygen	1.43	O_2							—	—	—	—	—	—	—	—
Nitrogen	1.25	N_2							—	—	—	—	—	—	—	—
Hydrogen	0.09	H_2							12767	10758	2.390	—	1.0	1.89	2.89	0.27
Carbon monoxide	1.25	CO							12642	12642	2.390	1.0	—	1.89	2.89	0.32
Carbon dioxide	1.96	CO_2							—	—	—	—	—	—	—	—
Methane	0.72	CH_4							39750	35820	9.570	1.0	2.0	7.57	10.6	0.90
Ethane	1.34	C_2H_6							69638	63744	16.74	2.0	3.0	13.2	18.2	1.60
Ethylene	1.25	C_2H_4							62991	59060	14.35	2.0	2.0	11.4	15.4	1.48
Propane	1.97	C_3H_8							99070	91255	23.91	3.0	4.0	18.9	25.9	2.29
Butane	2.59	C_4H_{10}							128452	118623	31.09	4.0	5.0	24.6	33.6	2.98
											②		①			③

T8-7E.ai

<Setting Procedure>

1) Touch the Setup key on the basic panel display, and the [Execution/Setup] display appears.

2) Select [Commissioning] and the Commissioning display appears.

3) Select [Others] then [Fuel setup] and the display of Figure 8.21 appears.

4) Select [Content of moisture in exhaust gas] and [Theoretical air quantity required] in turn and enter numeric data.

5) Select [more] and touch the Enter key, and a display like Figure 8.22 is displayed. Here enter [Value of the X coefficient] and [Absolute humidity of the atmosphere] then select [finished] to revert to the display of Figure 8.21.

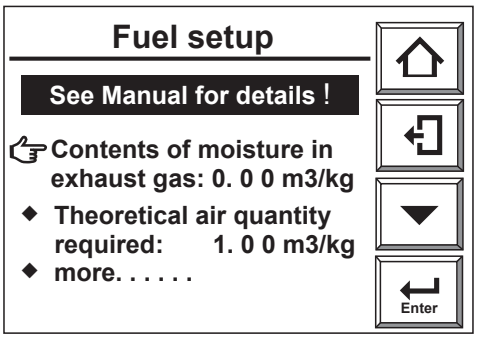

Figure 8.21 "Fuel Setup" display 1

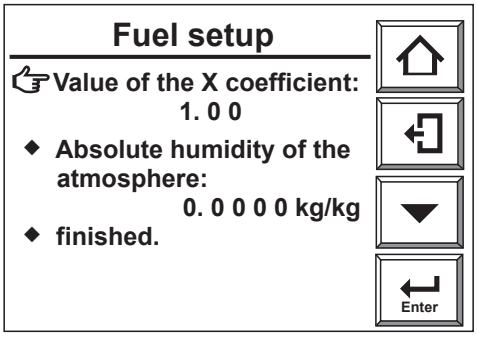

Figure 8.22 "Fuel Setup" display 2

< Default setting>

Fuel parameters are set to defaults in Table 8.8 prior factory shipment or after data initialization.

Table 8.8 Default values of "Fuel" settings

Item	Default
Amount of water vapor in exhaust gas	0.00 m^3/kg (m^3)
Theoretical amount of air	1.00 m^3/kg (m^3)
X value	1.00
Absolute humidity of the atmosphere	0.0 kg/kg

8.5.4 Setting Password

Unauthorized access to lower level menu displays from the Execution/Setup display can be protected by passwords. You can set separate passwords for [Calibration, Ind. check, Blow back, and Mainte.:] and for [Commissioning]

<Setting Procedure>

1) From the basic panel display touch the Setup key, and the [Execution/Setup] display appears.
2) Select [Commissioning] , and the Commissioning display appears.
3) Select [Others] then [Passwords]. The display shown in Figure 8.23 appears.
   First set the password for [Calibration, Ind. check, Blow back, and Mainte.:]
4) Select [Calibration, Ind. check, Blow back, and Mainte.:]
5) A text entry display appears. Enter password as up to 8 alphanumeric characters.
   You can enter a password for [Commissioning] by the same procedure.
6) Record the passwords and look after them carefully.

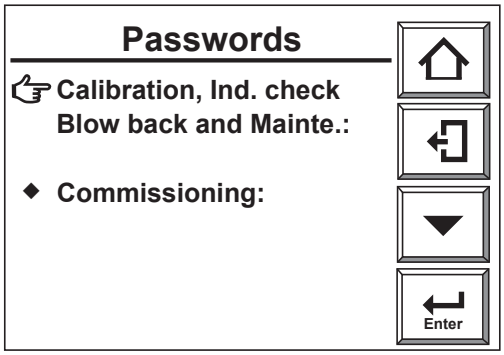

Figure 8.23 Password Setting

<Default setting>

The passwords are not set as shipped from factory. If you reset initialize the parameters, and password settings are deleted.

CAUTION

1) If you forget the password, from the [Execution/Setup] display select [Commissioning] and enter [JAVAJAVA] to enter Commissioning. Select [Password Setting] and confirm the password set.
2) From the Password setting display you can type spaces over an existing password to erase it.

9. Calibration

9.1 Calibration Briefs

9.1.1 Principle of Measurement

This section sets forth the principles of measurement with a zirconia oxygen analyzer before detailing calibration.

A solid electrolyte such as zirconia allows the conductivity of oxygen ions at high temperatures. Therefore, when a zirconia-plated element with platinum electrodes on both sides is heated up in contact with gases having different oxygen partial pressures on each side, the element shows the action of the concentration cell. In other words, the electrode in contact with a gas with a higher oxygen partial pressure acts as a negative electrode. As the gas comes in contact with the zirconia element in this negative electrode, oxygen molecules in the gas acquire electrons and become ions. Moving in the zirconia element, they eventually arrive at the positive electrode on the opposite side. There, the electrons are released and the ions return to the oxygen molecules. This reaction is indicated as follows:

Negative electrode: $O_2 + 4e \rightarrow 2\,O^{2-}$

Positive electrode: $2\,O^{2-} \rightarrow O_2 + 4\,e$

The electromotive force E (mV) between the two electrodes, generated by the reaction, is governed by Nernst's equation as follows:

$$E = -RT/nF \ln Px/Pa \quad \text{.....Equation (1)}$$

where,

R: Gas constant

T: Absolute temperature

n: 4

F: Faraday's constant

Px: Oxygen concentration in a gas in contact with the positive zirconia electrode (%)

Pa: Oxygen concentration in a gas in contact with the negative zirconia electrode (%)

Assuming the zirconia element is heated up to 750 °C, then we obtain equation (2) below.

$$E = -50.74 \log \frac{Px}{Pa} \quad \text{..... Equation (2)}$$

With this analyzer, the sensor (zirconia element) is heated up to 750 °C, so Equation (2) is valid. At that point, the relationship as in Figure 9.1 is effected between the oxygen concentration of the sample gas in contact with the positive electrode and the electromotive force of the sensor (cell), where a comparison gas of air is used on the negative electrode side.

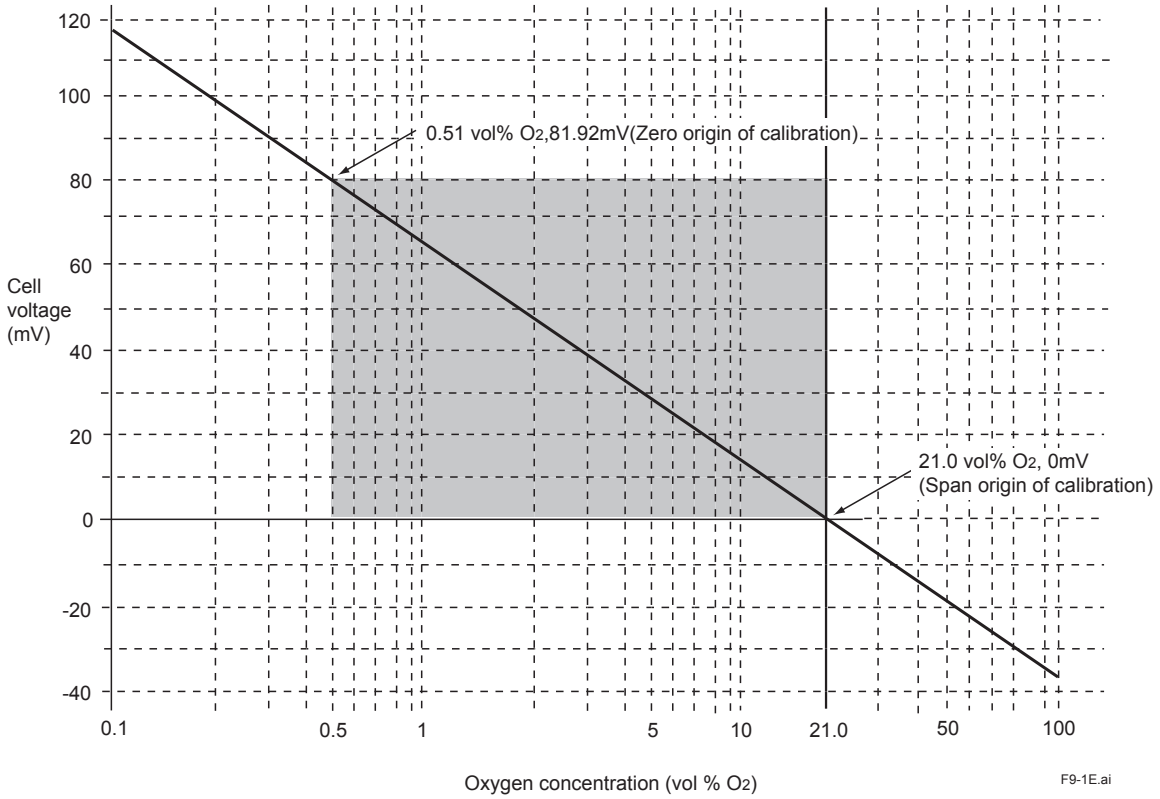

Figure 9.1 Oxygen concentration in a Sample Gas vs Cell Voltage (21 vol%O_2 Equivalent)

The measurement principles of a zirconia oxygen analyzer have been described above. However, the relationship between oxygen concentration and the electromotive force of a cell is only theoretical. Usually, in practice, a sensor shows a slight deviation from the theoretical value. This is the reason why calibration is necessary. To meet this requirement, an analyzer calibration is conducted so that a calibration curve is obtained, which corrects the deviation from the theoretical cell electromotive force.

9.1.2 Calibration Gas

A gas with a known oxygen concentration is used for calibration. Normal calibration is performed using two different gases: a zero gas of low oxygen concentration and a span gas of high oxygen concentration. In some cases, only one of the gases needs to be used for calibration. However, even if only one of the gases is normally used, calibration using both gases should be done at least once.

The zero gas normally used has an oxygen concentration of 0.95 to 1.0 vol%O_2 with a balance of nitrogen gas (N_2). The span gas widely used is clean air (at a dew-point temperature below -20 °C and free of oily mist or dust, as in instrument air).

For best accuracy, as the span gas use oxygen whose concentration is near the top of the measurement range, in a nitrogen mixture.

9.1.3 Compensation

The deviation of a measured value from the theoretical cell electromotive force is checked by the method in Figure 9.2 or 9.3.

Figure 9.2 shows a two-point calibration using two gases: zero and span. Cell electromotive forces for a span gas with an oxygen concentration p1 and a zero gas with an oxygen concentration p2 are measured while determining the calibration curve passing between these two points. The oxygen concentration of the measurement gas is determined from this calibration curve. In addition, the calibration curve corrected by calibration is compared with the theoretical calibration curve for determining the zero correction ratio represented by B/A × 100 (percent) on the basis of A, B and C shown in Figure 9.2 and a span correction ratio of C/A × 100 (percent). If the zero correction ratio exceeds the range of 100 ± 30 percent or the span correction ratio becomes larger than 0 ± 18 percent, calibration of the sensor becomes impossible.

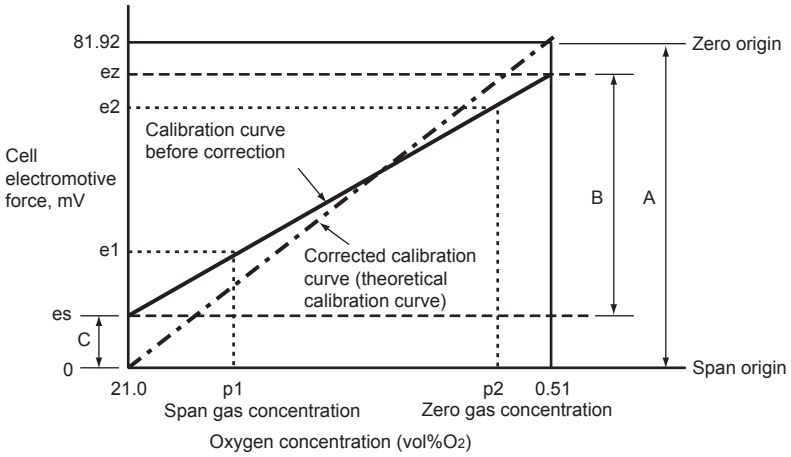

Figure 9.2 Calculation of a Two-point Calibration Curve and Correction Ratios using Zero and Span Gases

Figure 9.3 shows a one-point calibration using only a span gas. In this case, only the cell electromotive force for a span gas with oxygen concentration p1 is measured. The cell electromotive force for the zero gas is carried over from a previous measurement to obtain the calibration curve. The principle of calibration using only a span gas also applies to the one-point calibration method using a zero gas only.

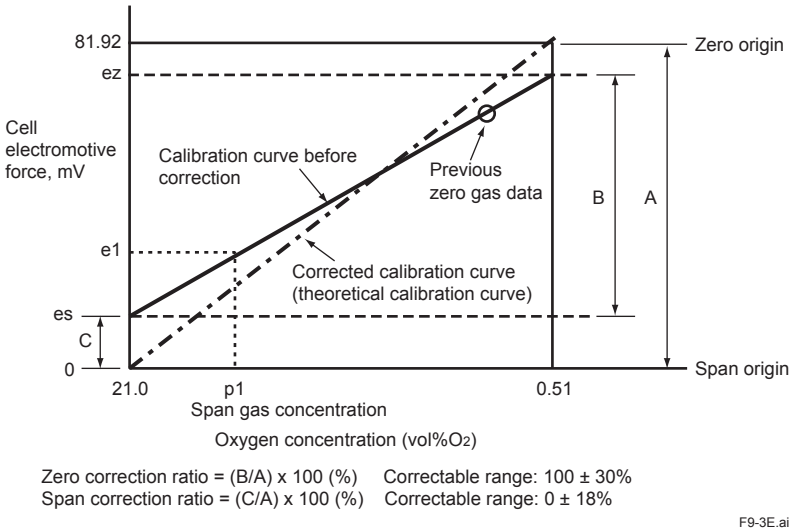

Figure 9.3 Calculation of a One-point Calibration Curve and Correction Ratios using a Span Gas

9.1.4 Characteristic Data from a Sensor Measured During Calibration

During calibration, calibration data and sensor status data (listed below) are acquired.
However, if the calibration is not properly conducted (an error occurs in automatic or semi-automatic calibration), these data are not collected in the current calibration.

These data can be observed by selecting the [Detailed data] display key from the basic panel display. For an explanation and the operating procedures of individual data, consult Subsection 10.1.1, “Detailed Display.”

(1) Record of span correction ratio
Recorded the past ten span correction ratios.

(2) Record of zero correction ratio
Recorded the past ten zero correction ratios.

(3) Response time
You can monitor the response time provided that a two-point calibration has been done in semi-automatic or automatic calibration.

(4) Cell’s internal resistance
The cell’s internal resistance gradually increases as the cell (sensor) deteriorates. You can monitor the values measured during the latest calibration. However, these values include the cell’s internal resistance and other wiring connection resistance. So, the cell’s degrading cannot be estimated from these values only.

When only a span calibration has been made, these values will not be measured, and previously measured values will remain.

(5) Robustness of a cell
The robustness of a cell is an index for predicting the remaining life of a sensor and is expressed in a number on four levels.

9.2 Calibration Setup

9.2.1 Mode

There are three calibration modes (for zero and span calibration): manual mode, semi-auto mode (started from the display or started by contact input) using preset calibration time and stabilization (settling) time, and autocalibration at preset intervals. Restrictions related to each mode are described here.

- When [Manual Mode] is selected.
  In this mode, only Manual calibration can be performed. (Contact input used to start semi-auto calibration has no effect. Autocalibration does not start at autocalibration start time.)
- When [Semi-Auto Mode] is selected.
  In this mode, manual calibration or semi-auto calibration can be performed.
  (Autocalibration does not start at autocalibration start time.)
- When [Auto Mode] is selected.
  Any calibration mode is valid.

CAUTION

Indication check setup mode of [Auto] cannot coexist with [Auto] Calibration setup mode. Therefore, If the mode of Indication check setup is set to [Auto], you cannot set the mode of Calibration setup to [Auto], and vice versa.

< Setting Procedure>

1) From the basic panel display, if you touch the Setup key, the [Execution/Setup] display appears. Select [Maintenance].

2) From the [Maintenance] display, select [Calibration setup] then [Mode] and you can select Manual, Semi-Auto, or Auto in the selection pulldown that appears. (Figure 9.4).

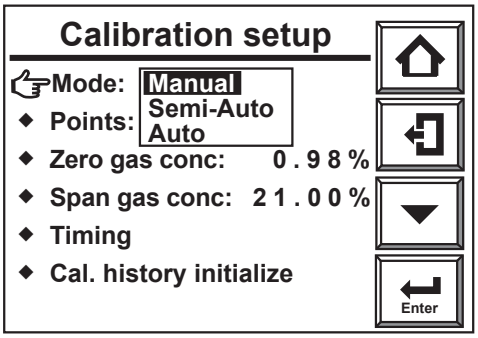

Figure 9.4 Calibration mode setting

9.2.2 Calibration Setup Procedure

You can perform both Span and Zero calibration, or either one or the other.
Normally select both: Span-Zero.

<Setting Procedure>

From [Maintenance] --> [Calibration setup] display, select [Points], then a selection window opens and you can select Span-Zero, Span or Zero (Figure 9.5).

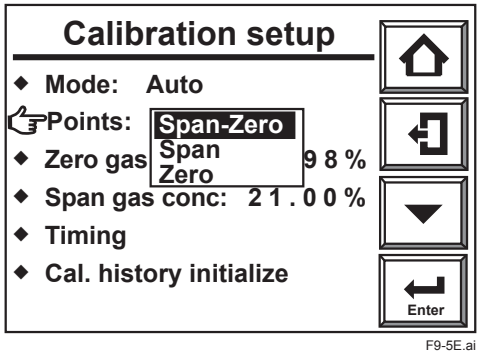

Figure 9.5 Procedure for Setting Points

9.2.3 Zero Gas Concentration

This sets the oxygen concentration of the zero gas used for calibration. Enter the value from the label of the corresponding gas bottle.

From the [Calibration setup] display, select [Zero gas conc], and the numerical data entry display is displayed. Enter the oxygen concentration of the zero gas used for calibration. For example, enter 0.98 vol% O_2 as [00098].

9.2.4 Span Gas Concentration

This sets the oxygen concentration of the span gas used for calibration. When the instrument air supply is used as the span gas, enter 21% O_2.

From the [Calibration setup] display, select [Span gas conc], and the numerical data entry display is displayed. Enter the oxygen concentration of the span gas used for calibration. For example, enter 21 vol% O_2 as [02100].

NOTE

When the instrument air supply is to be used as span gas, cool it to -20º C below dew point to remove moisture, oil mist and dust from the air. If you do not do this to purify the air, then the accuracy of the measurement may be affected.

9.2.5 Calibration Time Setting

If the mode is [Manual]:
Select [Hold time]. This is the output stabilization (settling) time required from calibration end until measurement mode is reentered. During this time, the calibration gas is switched to measurement gas and the measurement is allowed time to stabilize. Setting range of Hold time is from 00min. 00 sec. to 60 min. 59 sec. The analog outputs of individual channels which are under calibration remain in Output Hold status from the start of calibration until the end of the stabilization (settling) time, and their output is not included in averaging group calculations during this time.

If the mode is [Semi-Auto]:
In addition to the above [Hold time] output stabilization (settling) time, there is also a [Cal. time] setting. This is the settling time from when calibration gas flow is started until calibration is performed. The same time setting is used for both Zero and Span calibration.
Setting range is from 00min. 00 sec. to 60 min. 59 sec. Calibration time and stabilization time, and analog output status are shown on the calibration timing chart of Figure 9.6 below. For Solenoid Valve (SV) piping and wiring see Section 4.2 (Piping for a System to Perform Automatic Calibration).

If the mode is [Auto]:
In addition to the above [Hold time] output stabilization (settling) time and [Cal. time] setting, there is also calibration [Interval], [Start date] and [Start time]. The Automatic Calibration Interval can be set in the range 00 days 00 hrs. to 255 days 23 hrs. Once Automatic Calibration starts, it is performed for all installed channels, so the interval needs to be larger than the sum of span and zero calibration times plus settling times for all channels.

The Start date and Start time are for the first calibration in the Automatic Calibration cycle (repeated at the calibration Interval). To set 2004 June 21, at 1:30 pm, set Start date to YY:04, MM:06, DD:21 and Start time to HH: 13, MM: 30

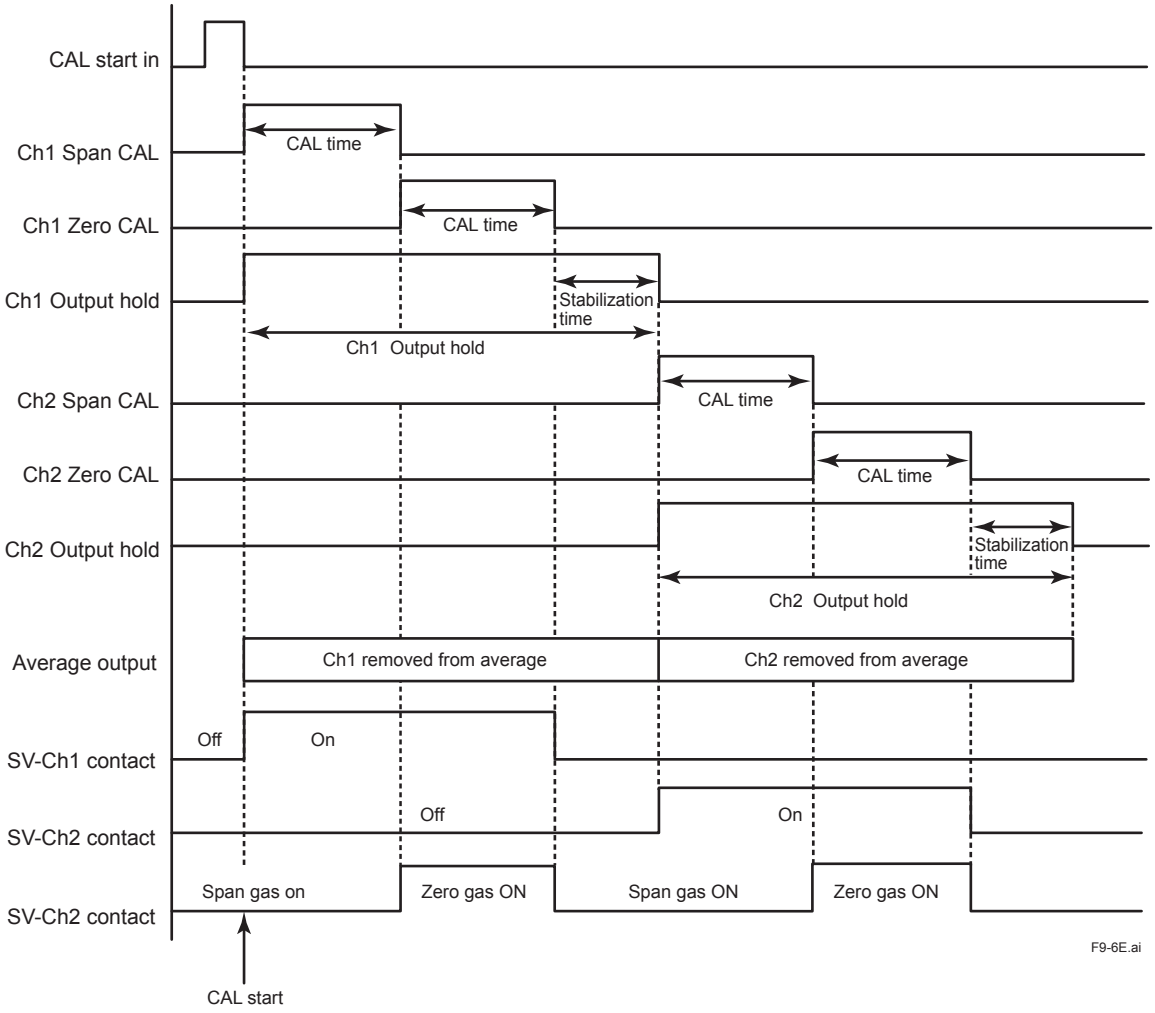

Figure 9.6 Calibration Timing

<Setting procedure>

1) From the [Calibration setup] display, select [Timing] and the display shown in Figure 9.7 appears. In this example, [Mode] is set to [Auto].

2) Select items and enter numerical values as required.

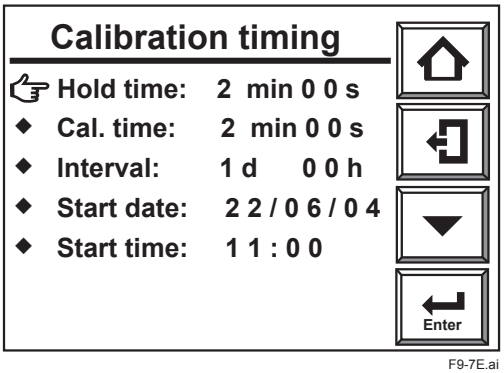

Figure 9.7 Calibration time setting

NOTE

When setting, bear the following points in mind:

1) When calibration is to be started by a contact input signal, you need to define and enable the contact input signal on the [Input contacts] display.
2) The starting of Automatic Calibration may be delayed by status of the channel to be calibrated or by the status of other channels, as explained by Table 9.1 below:
3) If the calibration interval is shorter than the sum of hold (stabilization) time plus calibration time, the second calibration start time will conflict with the first calibration. In such a case, the second calibration will not be conducted. (When both zero and span calibrations are to be performed, the calibration time is double that required for a single (zero or span) calibration.)
4) If the (Calibration) Interval is set to DD: 00, HH: 00 then Automatic Calibration will not be performed.
5) If you set the start date before the current date, then Automatic Calibration will not start.
6) [Cal. time] of [Calibration timing] display will be equalized to [Check time] of [Semi-auto ind. chk] display.

Table 9.1 When Auto Calibration conflicts with Other Commands

Calibration \ Other commands	Purging the channel	Other channel CAL	Indication check in other channel	Blow back in other channel	Mainte-nance	CAL chan. in warmup status	CAL chan. in Error status	CAL chan. now disabled
Manual	x	x	x	x	x	x	x	x
Semi-Auto	x	x	x	x	x	x	x	x
Auto	Wait	Wait	Wait	Wait	Wait	x	x	x

X : Cannot perform calibration
Wait : Wait until other command finishes before starting calibration

<Shipping-time defaults>

At shipping-time (or after resetting parameters) default values are as shown in Table 9.2 below.

Table 9.2

Item	Default
Mode	Manual
Points	Span-Zero
Zero gas conc	1.00%
Span gas conc	21.00%
Hold time	3 min. 00 sec.
Cal. time	3 min. 00 sec.
Interval	1 day 00 hrs.
Start date	yy01mm01dd01
Start time	hh00mm00

9.3 Performing Calibration

NOTE

1) Perform calibration under normal working conditions (e.g. continuous operation with sensor mounted on furnace).
2) Perform both Span and Zero calibration for best resultant accuracy.
3) When instrument air is used for the span calibration, remove the moisture from the instrument air at a dew-point temperature of -20°C and also remove any oily mist and dust from that air.
4) If dehumidifying is not enough, or if foul air is used, the measurement accuracy will be adversely affected.

9.3.1 Performing Manual Calibration

To perform manual calibration, you open or shut calibration gas valves following messages on the display. Solenoid valves can be opened and closed automatically at the same time the messages are displayed on the display. For details, see Subsection 7.9.2, Performing Manual Calibration.

9.3.2 Semi-Automatic Calibration

Semi-automatic calibration is started either from the display or by external contacts. When started from the display, only the channel selected on the display is calibrated. When started by an external contact, all working channels can be calibrated one channel after another.

Here we give an example of the procedure for both of these cases, with both Span and Zero calibration selected.

<Calibration Procedure>

Starting Semi-Auto Calibration from the Display

1) From the basic display if you touch the Setup key, the [Execution/Setup] display appears. Select [Calibration].
2) Next select [Semi-auto calibration]. The [Semi-auto cal.] channel select display, Figure 9.8, is displayed.
3) Select the channel to be calibrated. The [Semi-auto cal.] display, Figure 9.9, is displayed.
4) When you select [Start calibration] the [Semi-auto cal.] trend graph of Figure 9.10 is displayed, and Span calibration begins.
5) When the preset calibration time has elapsed, Span calibration ends and Zero calibration begins. Likewise, when the preset calibration time has elapsed, Zero calibration ends. After a preset stabilization (settling) time, the instrument reverts to measurement mode.
6) Touch the Reject key (icon of door with arrow) to abort calibration. If you abort Span or Zero calibration then calibration time is skipped and stabilization (settling) time starts. If you touch the Reject key again then stabilization (settling) time is also skipped, and you revert to the Basic display.

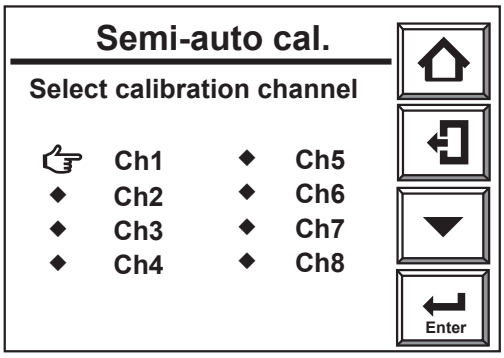

Figure 9.8 Channel Select Display

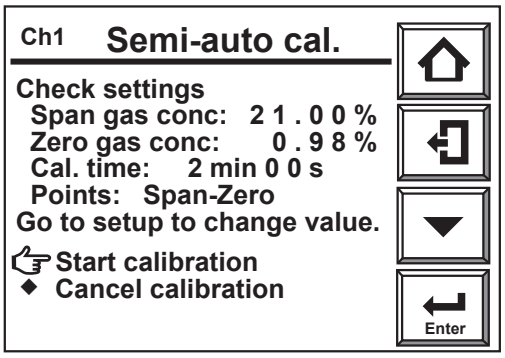

Figure 9.9 Semi-Auto Calibration Start

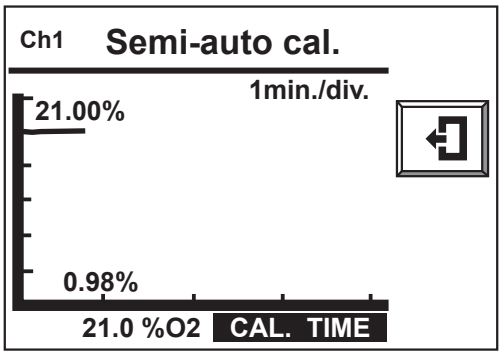

Figure 9.10 Semi-Auto Calibration Trend Graph

Starting Semi-Auto Calibration by a Contact input

1) Confirm that on the [Input contacts] display, [Calibration start] is selected.

2) In Measurement mode (with the Basic display displayed) when the contact input is detected then Calibration starts.

3) To abort calibration, touch the Reject key (door with arrow icon). If you abort Span or Zero calibration then calibration time is skipped and stabilization (settling) time starts. After that touch the reject key (door with arrow icon) again, stabilization (settling) time is skipped and abort calibration completely. If you touch the Enter key during stabilization (settling) time, abort calibration of corresponding channel and next channel calibration will be started.

9.3.3 Starting Automatic Calibration

No user action is required to start automatic calibration. Automatic calibration starts at the preset time and is repeated at the preset interval.

NOTE

- Before starting Semi-Auto calibration or Auto calibration, operate the calibration gas solenoid valves and adjust calibration gas flow to 600 ± 60 ml/min for each sensor.
- If you skip Hold time, the “output hold” for output stabilization is released immediately after Calibration time ends. (However, in this case, if “output hold” under maintenance status is set to “enable”, the “output value” is constant after Calibration time ends). If stabilization time is skipped and if calibration gas still remains in the sensor, the gas affect the accuracy of the output.

10. Other Functions

10.1 Display

On the basic panel display, touch the Detailed data key to view detailed operational data (see Figure 10.1). On the detailed data display you can scroll up / down a page with the ▼ and ▲ keys, and you can switch to another channel with the ◄ or ► key . A detailed data display has 12 pages (screens) per channel. The following describes each data item.

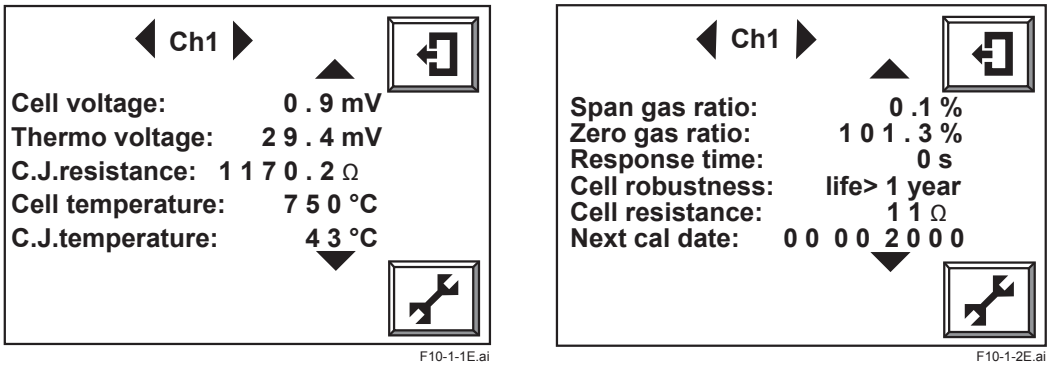

Figure 10.1 Detailed Data Display

10.1.1 Cell Voltage

The cell (sensor) voltage will be an index to determine the amount of degradation of the sensor. The cell voltage corresponds to the oxygen concentration currently being measured. If the indicated voltage approximates the ideal value (corresponding to the measured oxygen concentration), the sensor will be assumed to be normal.

The ideal value of the cell voltage (E), when the oxygen concentration measurement temperature is controlled at 750ºC, may be expressed mathematically by:

E = -50.74 log (Px/Pa) [mV]

where, Px: Oxygen concentration in the sample gas

Pa: Oxygen concentration in the reference gas, (21% O_2)

Table 10.1 shows oxygen concentration versus cell voltage.

Table 10.1 Oxygen Concentration Vs. Cell Voltage, (cell temperature: 750°C)

%O2	0.1	0.2	0.3	0.4	0.5	0.6	0.7	0.8	0.9
mv	117.83	102.56	93.62	87.28	82.36	78.35	74.95	72.01	69.41

%O2	1	2	3	4	5	6	7	8	9
mv	67.09	51.82	42.88	36.54	31.62	27.61	24.21	21.27	18.67

%O2	10	21.0	30	40	50	60	70	80	90
mv	16.35	0	-7.86	-14.2	-19.2	-23.1	-26.5	-29.5	-32.1

%O2	100
mv	-34.4

T10.1E.ai

10.1.2 Thermocouple Voltage

The cell temperature is measured with a Type K (chromel-alumel) thermocouple. The thermocouple cold junction is located in the detector terminal box. The cell temperature and the thermocouple voltage (including the voltage corresponding to the cold junction temperature) are displayed.

10.1.3 Cold Junction Resistance (C.J. Voltage)

The ZR22 Detector measures the cold junction temperature using an RTD (Pt 1000).
(The earlier model of ZO21D uses transistors to measure the cold junction temperature.)
If detector is “ZR22” is selected in the Basic setup display, the RTD resistance values will be displayed. If the ZO21D is selected, the transistor voltage will be displayed.

10.1.4 Cell temperature

This displays the cell (sensor) temperature, which is determined from the thermocouple electromotive force (e.m.f.) and cold junction temperature. Normally it is 750°C.

10.1.5 C. J. Temperature

This indicates the detector terminal box temperature, which compensates for the cold junction temperature for a thermocouple measuring the cell temperature. When the ZR22 Detector is used, the maximum C. J. temperature will be 150°C. If the terminal box temperature exceeds this, take measures to shield the terminal box from heat radiation.

The maximum C. J. temperature varies depending on the type of detector.

10.1.6 Span gas and Zero gas Correction Ratios

These are used to check for degradation of the sensor (cell). If the correction ratio is beyond the limits as shown in Figure 10.2, the sensor should no longer be used.

These ratios can be found by calculating the data as shown below.

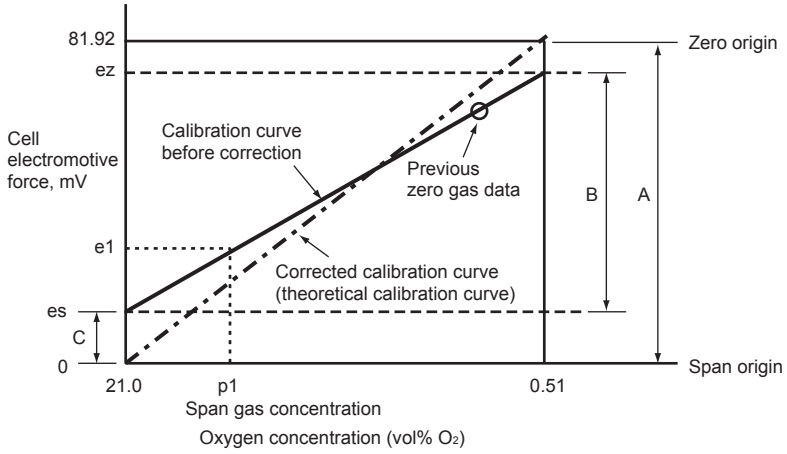

Zero gas correction ratio = (B/A) x 100 (%) Correctable range: 100 ± 30%
Span gas correction ratio = (C/A) x 100 (%) Correctable range: 0 ± 18%

F10-2E.ai

Figure 10.2

10.1.7 Cell Response Time

The cell's response time is obtained in the procedure shown in Figure 10.3. If only either a zero or span calibration has been carried out, the response time will not be measured just as it will not be measured in manual calibration.

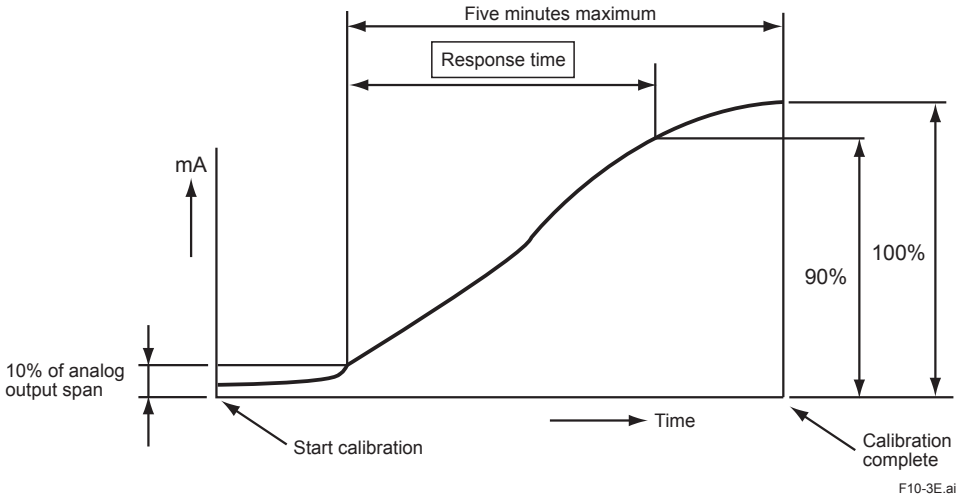

The response time is obtained after the corrected calibration curve has been found. The response time is calculated, starting at the point corresponding to 10% of the analog output up to the point at 90% of the analog output span. That is, this response time is a 10 to 90% response.

Figure 10.3 Typical response time characteristic

10.1.8 Robustness of a Cell

The robustness of a cell is an index for predicting the remaining life of a sensor and is expressed as one of four time periods during which the cell may still be used:

(1) more than a year

(2) more than six months

(3) more than three months

(4) less than one month

The above four time periods are tentative and only used for preventive maintenance, not for warranty of the performance.

This cell's robustness can be found by a total evaluation of data involving the response time, the cell's internal resistance, and calibration factor. However, if a zero or span calibration was not made, the response time cannot be measured. In such a case, the response time is not used as a factor in evaluating the cell's robustness.

10.1.9 Cell's Internal Resistance

A new cell (sensor) has an internal resistance of 200Ω maximum. As the cell degrades, so will the cell's internal resistance increase. The degradation of the cell cannot be evaluated just by changes in cell's internal resistance, however. Those changes in the cell's internal resistance are just a guide to the extent the cell is degrading. The updated values obtained during the calibration are displayed.

10.1.10 Recommended Next Calibration Date

Recording the cell e.m.f. at calibration time, and monitoring the drift in cell e.m.f. with time, gives an idea of how long it will take for measurement error to reach tolerance, and thus recalibration can be scheduled before that date. The tolerance is a maximum of ±0.5% of range, so if range is 0-25% O_2 then tolerance is 25% O_2 × ± 0.5% = ± 0.125% O_2.

The instrument extrapolates a line through the most recent three cell e.m.f. readings (see Figure 10.4), uses this to determine how long it will take for measurement error to exceed tolerance, and recommends that a recalibration date.

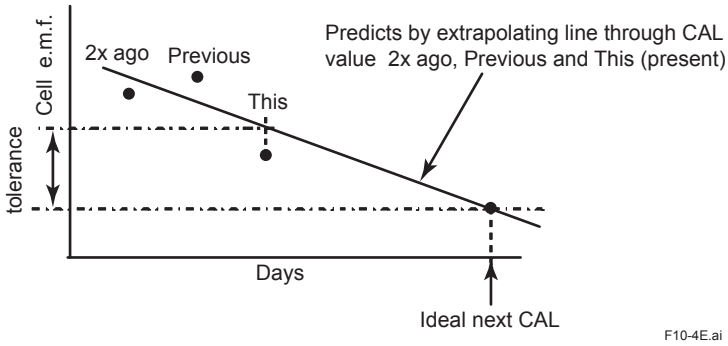

Figure 10.4 Predicting Next Recalibration Date

After the first three calibrations - which, however, must be separated by at least five days, or the data is ignored by the autopredictor - the autopredictor starts operating.

CAUTION

1) This function does not guarantee accuracy, it's just a guide.
2) The recommended date for the next calibration with be within the range of between 5 and 90 days.
3) If the predictor finds that the slope of the line becomes positive (the line slants upward to the right), then it may recommend a next calibration date in five days time.
4) After the predictor has made a calculation, changing the current output range does not affect this (does not cause a recalculation).

10.1.11 Heater ON-Time Ratio

The probe sensor is heated to and maintained at 750°C. When the sample gas temperature is high, the amount of heater ON-time decreases.

10.1.12 Time

The current date and time are displayed. These are backed up with built-in batteries, so the clock continues to run even if the power is switched off.

10.1.13 Ch. card Rev., Ctrl. card Rev.

This shows the revision number of the channel card software and Control card software.

10.1.14 Maximum Oxygen Concentration

The maximum oxygen concentration and the time of its occurrence during the period specified in the Averaging display are displayed. After the preset monitoring interval has elapsed, the maximum oxygen concentration that has been displayed so far will be cleared and a new maximum oxygen concentration will be displayed. If the setup period of time is changed, the current maximum oxygen concentration will be displayed (for more details, see Subsection 8.6.2 earlier in this manual).

10.1.15 Minimum Oxygen Concentration

The minimum oxygen concentration and the time of its occurrence during the period specified in the Averaging display are displayed. If the setup period elapses, the minimum oxygen concentration that has been displayed so far will be cleared and a new minimum oxygen concentration will be displayed. If the setup period of time is changed, the current minimum oxygen concentration will be displayed (for more details, see Subsection 8.6.2 earlier in this manual).

10.1.16 Average Oxygen Concentration

The average oxygen concentration during the periods over which average values are calculated is displayed. If the setup period elapses, the average oxygen concentration that has been displayed so far will be cleared and a new average oxygen concentration will be displayed. If the setup period of time is changed, the current average oxygen concentration will be displayed (for more details, see Subsection 8.6.2 earlier in this manual).

10.1.17 History of Calibration Time

The calibration-conducted dates and times, and span gas and zero gas ratios for the past ten calibrations are stored in memory.

10.1.18 Internal Temperature Alarm Logging

You can view a history of past instrument internal temperature alarms. Refer to Section 12.2, Displays and Remedies When Alarms Are Generated.

The instrument internal temperature alarms log is deleted if you clear the alarm log storage area. Refer to Section 10.7, Parameter Initialization.

10.2 Trend Graphs

Up to 11 user-selected data from among the individual outputs from each channel and average concentration outputs, groups a, b, and c, can be viewed in graphical form at a time in a single screen. To move to the trend graph display, touch the graph display key on a basic panel display. The cascade function may be used to view each trend line of channels clearly in the trend graph display. The function offsets the axes so that trend lines do not overlap. The following describes graph setup.

10.2.1 Trend Graph Screen

Figure 10.5 shows how the Trend Graph is displayed.

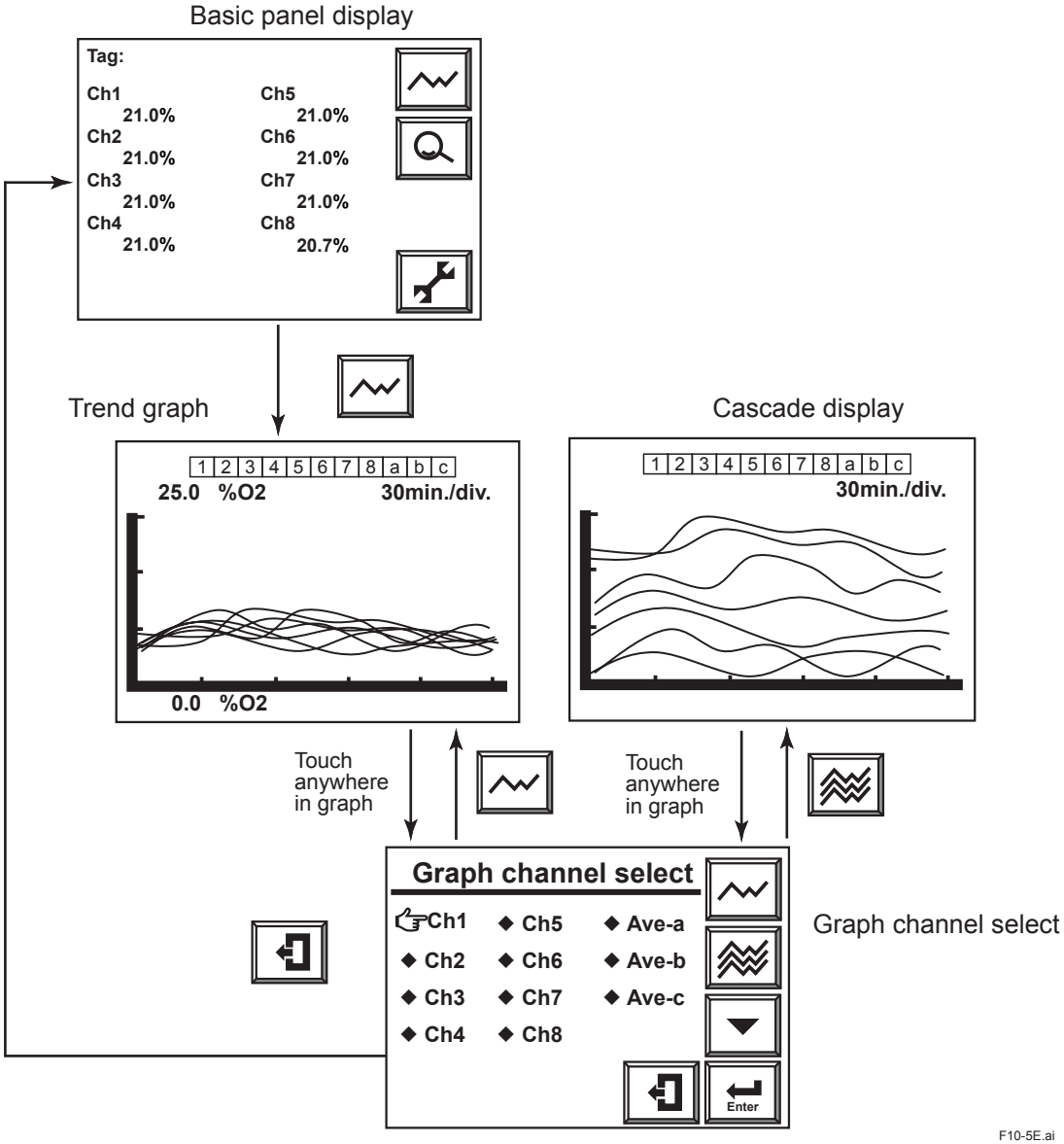

Figure 10.5 Displaying Trend Graph Display

10.2.2 Time Axis of Trend Graph

The time axis of the trend graph is determined by the sampling interval. For each channel, and for each division on the time axis, 60 data items can be plotted. If data is sampled at 10-second intervals then each division represents 60 x 10 = 600 seconds or 10 minutes (see Figure 10.6). The sampling interval can be set in the range 1 to 30 seconds. If it is set to 1 second, then trend graph time span is 60 x 1 x 5 = 300 seconds (5 minutes) and if set to 30 seconds, then trend graph time span is 60 x 30 x 5 = 9000 seconds (150 minutes).

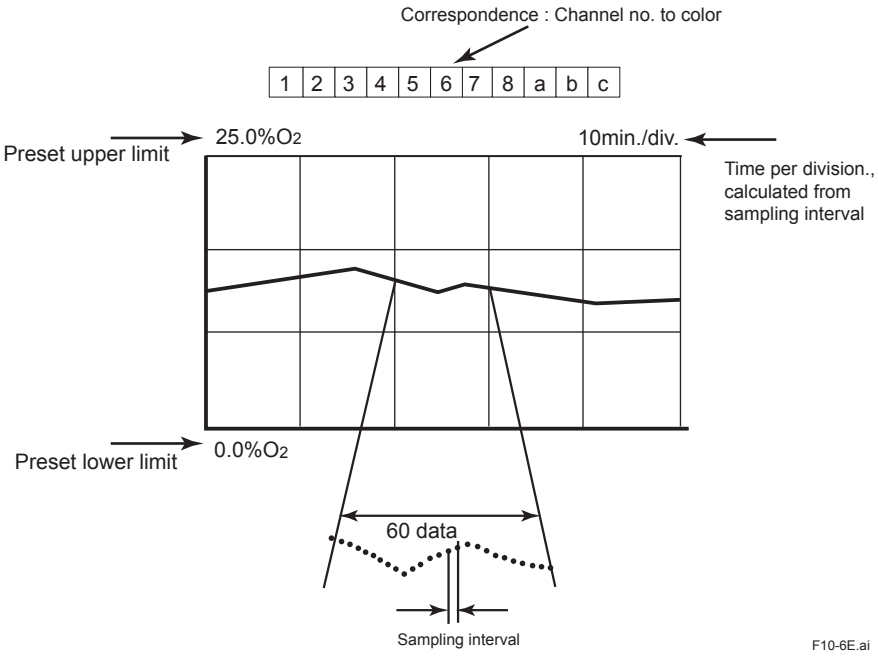

Figure 10.6 Plotting Graph for Sampling Interval

NOTE

If a rapid change in the measured value occurs during sampling, no sampled data are plotted on the graph. Use the graph indication tentatively. Check the output current for accurate data.

10.2.3 Trend Graph Display Settings

<Setting procedure>

Selecting channels to be displayed

1) On the basic panel display, touch the Graph display key to display the [Trend graph] display.
2) If you touch anywhere in the Graph display area, the [Graph channel select] display will appear. The colors of the channel numbers correspond to the colors of the trend graphs. Grayed-out channels are not selected for display.
3) To suppress display of the Ave-a graph, move the pointer to [Ave-a] and touch the Enter key. The color of [Ave-a] turns gray, and its trend graph is no longer displayed.

Entering the sampling interval

4) On the basic panel display, touch the Setup key to display the [Execution/Setup] display.

5) Select [Maintenance] then [Display setup] and touch the Enter key.

6) Select [Trend graph] and tough the Enter key.

7) Select [Sample interval] and touch the Enter key and the numerical entry display appears. You can enter a value for the sampling interval in the range 1 to 30 seconds.

Setting trend graph vertical scale

8) From the [Trend graph] display, select [Upper limit] and touch the Enter key. The numerical entry display appears, and you can enter the upper limit value. The lower limit value can be entered in a similar manner. Both upper and lower limit values can be entered in the range 0 to 100% O_2, however the upper limit value must be set higher than the lower limit value by at least 1% O_2.

<Default setting>

The graph parameters are set to the following default prior factory shipment or after data initialization.

Table 10.2

Item	Default
Displayed channels	All channels
Sampling interval	30 seconds
Upper limit	25% O_2
Lower limit	0% O_2

10.3 Other Display-related Functions

10.3.1 Auto-return Time

On the [Execution/Setup] display or lower level menu displays, if no keys are touched for a preset time, the “auto-return” time, then the display will automatically revert to the basic panel display. The “auto-return” time can be set in the range 0 to 255 minutes. If it is set to 0, then the display does not automatically revert.

<Setting procedure>

1) On the basic panel display, touch the Setup key to display the [Execution/Setup] display, then select [Maintenance]. Select [Display setup] then [Auto return time].
2) The numerical entry display appears for you to enter the desired “auto-return” time.
   To set an “auto-return” time of one hour, enter 060.
3) If you set 0, then the “auto-return” function does not operate.

<Default setting>

The Auto return time is set to 0 prior factory shipment or after data initialization.

10.3.2 Selecting Language

You can select a display language from among English, Japanese, German and French.
The display language is set to the one specified in the purchase order when the analyzer is shipped from the factory.

<Setting procedure>

1) On the basic panel display, touch the Setup key to display the [Execution/Setup] display.
2) Select [Maintenance], then [Display setup].
3) Select [Language] and the dropdown selection (Figure 10.7) allows you to select the desired language.

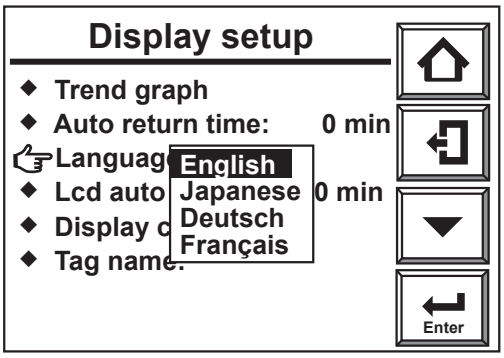

Figure 10.7 Selecting the Display Language

10.3.3 LCD Auto Off

If no keys are touched during a preset time interval, then the display and backlight turn off.
They are turned back on:

1) If you touch the screen.
2) If an error or alarm occurs.

<Setting procedure>

1) From [Display setup] select [Lcd auto off time].
2) Touch the Enter key and the numerical entry display appears. To set an “Lcd auto off time” of one hour, enter 060.
3) You can enter a value in the range 0 to 255 minutes. If you set 0 then the “Lcd auto off time” function does not operate.

<Default setting>
The Lcd auto off time is set to 0 prior factory shipment or after data initialization.

10.3.4 Display Contrast Adjustment

Display contrast can be adjusted by the following procedure:

<Setting Procedure>

1) From [Display setup] select [Display contrast].
2) If you press the Enter key then the contrast adjustment display of Figure 10.8 appears.
3) Use the ◄ and ► keys to adjust for best contrast, then touch the Enter key.
4) If you touch the Reject key, then no changes are made.

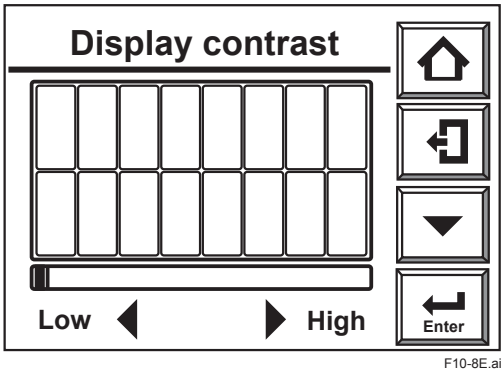

Figure 10.8 Contrast Adjustment Display

10.3.5 Tag Name Entry

You can enter an arbitrary Tag Name for this instrument:

<Setting Procedure>

1) From [Display setup] select [Tag name].
2) A text entry display appears for you to enter an arbitrary tag name. You can use alphanumerics and symbols, up to 12 characters.

10.4 Indication Check

In addition to zero and span calibration gases, you can select a third check gas for a 3- point check. This is another check to determine if there is any discrepancy between the measured value and the certified concentration of the gas.

10.4.1 Mode

There are three modes of indication check operation: manual, semi-automatic, and automatic.
In Manual mode, zero, span, and third gas indication checks can be performed sequentially and manually. In Semi-auto mode, an indication check can be started by key operation on the display or by a contact input signal, and then sequentially performed at a preset check time and hold time. In Auto mode, indication checks are automatically performed at preset intervals.

The following restrictions apply:

· When [Manual] is selected
In this mode, only Manual Indication Check can be performed. (Contact input used to start Semi-Auto Indication Check has no effect. Auto Indication Check does not start at Auto Indication Check start time).

· When [Semi-Auto] is selected.
In this mode, Manual Indication Check or Semi-Auto Indication Check can be performed.
(Auto Indication Check does not start at Auto Indication Check).

· When [Auto] is selected.
Indication Check can be performed in any of the three modes.

CAUTION

When [Auto] Calibration mode is selected, you cannot also select [Auto] Indication Check mode. The reverse also applies: if you select [Auto] Indication Check mode then [Auto] Calibration mode cannot be selected.

<Setting Procedure>

1) On the basic panel display, touch the Setup key to display the [Execution/Setup] display, then select [Maintenance].

2) From the [Maintenance] display, select [Indication check setup] then [Mode]. A dropdown menu opens, allowing you to select between Manual, Semi-auto, or Auto modes (see Figure 10.9).

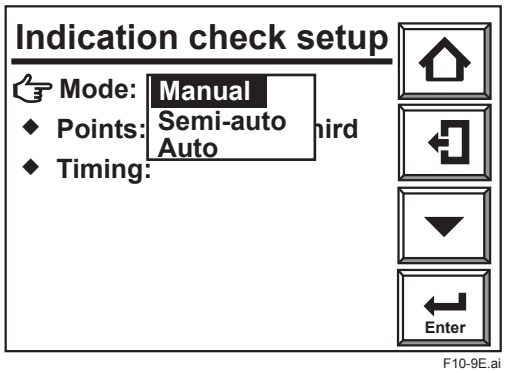

Figure 10.9 Indication Check Mode Selection

10.4.2 Procedure for Performing an Indication Check

You can perform two-point Span and Zero (Gas) Indication Checks, you can include a third gas and perform a three-point indication check, or you can check just one of the three points.

<Setting Procedure>

Select [Points] on the [Indication check setup] display. A dropdown menu opens, allowing you to select the desired indication check point(s) from: [Span-Zero], [Span], [Zero], [Span-Zero-Third] or [Third] (Figure 10.10).

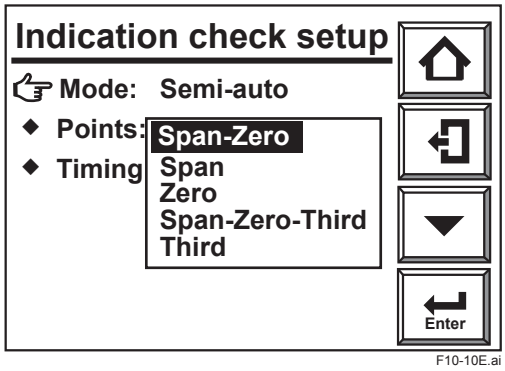

Figure 10.10 Indication Check Point Selection

10.4.3 Setting Contacts for Operating Third Check Gas Solenoid Valve

When performing a three-point Semi-auto or Auto Indication Check, you need to allocate a contact to operate the third check gas solenoid valve.

<Setting Procedure>

1) On the basic panel display, if you touch the Setup key, the [Execution/Setup] display appears. Select [Commissioning] then [Contact setup].
2) Select a contact (Ex. [Output contact 3]) that is not yet allocated to other functions, and select [Others].
3) Select [Third gas] and turn it [ON] .

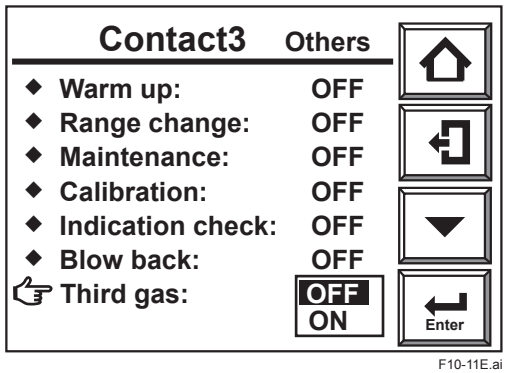

Figure 10.11 Allocating Third Check Gas Contact

10.4.4 Setting Indication Check Timing

All timing parameters set in the [Calibration setup] display applies to indication check timing. The timing can also be set from the [Indication check setup] display. Note, however, that the timing parameters set in the [Indication check setup] display are reflected in the timing setting for calibration. Once the indication check starts on a channel, its individual analog output is held at a value preset in the Output Hold Setup and excluded from averaging group calculations until the output hold time has elapsed.
After the hold time has elapsed, the indication check of the next channel is started. A timing chart showing indication check time, hold time, analog output status, check gas switching solenoid contact action, is provided in Figure 10.12. For details on solenoid valve piping and wiring, refer to Subsection 4.2.6, “Piping for Indication Check” and Section 5.3, “Wiring and Piping Examples.”.

Table 10.3 When Auto Indication Check conflicts with Other Processing

Other processing / Indication check	Purging the channel	Other channel CAL	Indication Check in other channel	Blow back in other channel	Mainte-nance	IND Check chan. in warmup status	IND Check chan. in Error status	IND Check chan. now disabled
Manual Indication Check	x	x	x	x	x	x	x	x
Semi-auto Indication Check	x	x	x	x	x	x	x	x
Auto Indication Check	Wait	Wait	Wait	Wait	Wait	x	x	x

X : Cannot perform indication check
Wait : Wait until other command finishes before starting indication check

NOTE

When setting, observe the following cautions:

Observe the following cautions when setting the indication check timing.

1) You can select [Indication check setup timing] and set values, but these will be reflected in the [Calibration setup timing] settings.
2) When indication check is to be started by a contact input signal, you need to set the relevant contact input to Indication check start on the [Input contacts] display.
3) Indication check may be delayed or canceled by status of the channel to be checked or by the status of other channels, as explained by Table 10.3.
4) If the (indication check/calibration) interval setting is shorter than the sum of indication check times plus hold (stabilization) times for all channels, then the system will be in indication check status when the second indication check cycle attempts to start. In this case, the second indication check will be cancelled. (For a 3-point check with zero check, span check, and third gas check, the time required for all three checks is going to be three times as long as for a single check.)
5) If interval is set to 000 day 00 hour, then auto indication check is not performed.
6) If you set start date before the current date, then auto indication check will not start.

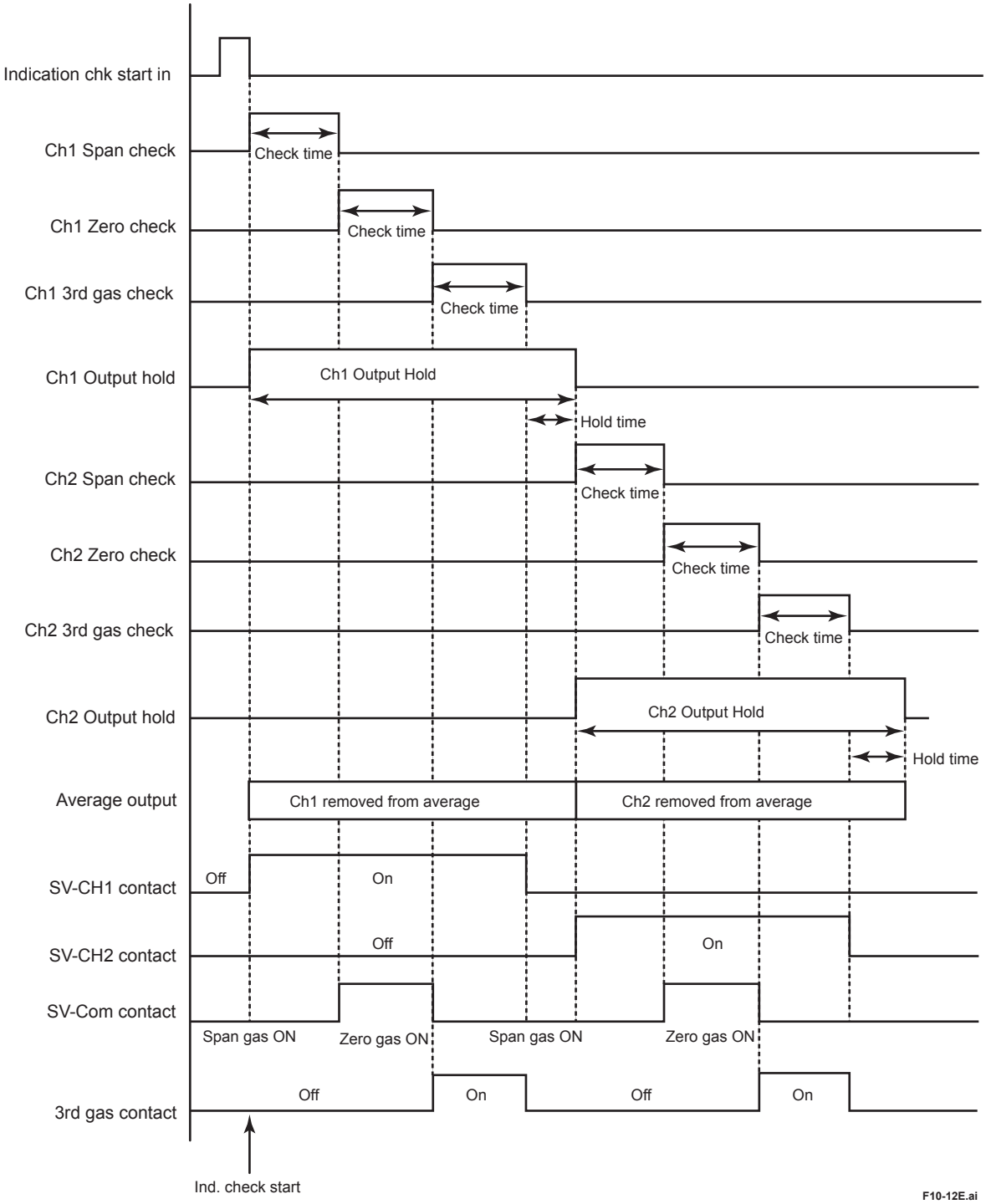

Figure 10.12 Indication Check timing

<Shipping-time defaults>

Indication check parameters are set as shown in Table 10.4 prior factory shipment or after data initialization.

Table 10.4 Indication Check Default Setting

Item	Default
Mode	Manual
Point	Span-Zero

10.4.5 Running an Indication Check

Manual Indication Check

A manual indication check is performed by following prompts on the screen, and manually opening or closing valves of calibration gas or third check gas. When solenoid valves are used, valves are opened and closed automatically at the same time that messages appear on the screen. The procedure for indication check is virtually the same as for calibration. Taking a 3-point indication check using zero, span, and third gases for example, the procedure is described below.

<Procedure>

1) Confirm that zero, span, and third gas flow control valves are fully closed, then adjust supply gas pressure to a sample gas pressure +50 kPa (but a maximum of 300 kPa) using regulator valves or air sets on the zero, span and third check gas cylinders.
2) Touch Setup key on the basic panel display to switch to the [Execution/Setup] display.
3) Touch [Indication check] and the Indication check display appears.
4) Touch [Manual Ind. check] then the Enter key. The Manual Ind. check Channel select display shown in Figure 10.13 appears.
5) Select the channels to be checked (channels in warm-up or error status cannot be selected). Here Channel 2 is taken as an example.
6) Select [Span gas ind. check] and touch the Enter key. A display like Figure 10.14 appears.

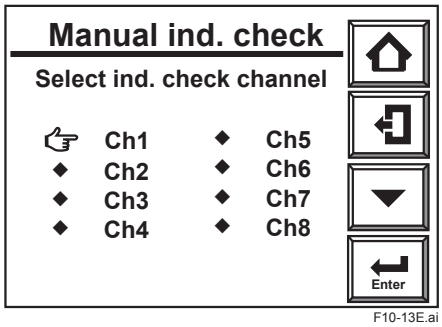

Figure 10.13 Channel select screen

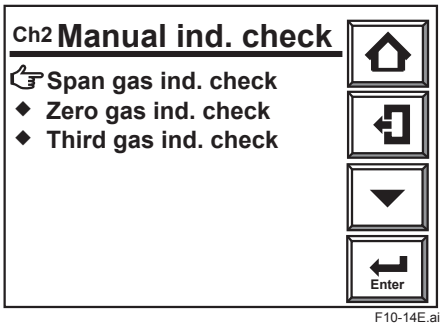

Figure 10.14 Manual Span Ind. check

7) Open the span gas flow control valve, and adjust flow rate to 600 ± 60 ml/min. If auto indication check piping and wiring are installed, then span gas starts to flow automatically.
8) Select [Start ind. check] touch the Enter key (Figure 10.15). An oxygen concentration trend graph like Figure 10.16 is displayed, and a [CHK.TIME] status mark blinks.
Watch the trend graph and confirm that the measured value stabilizes. Compare the measure span gas concentration displayed at the bottom of the display against the certified concentration of span gas to check for any discrepancy or error.

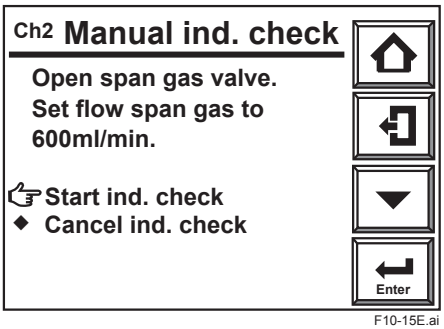

Figure 10.15 Manual Indication Check Start

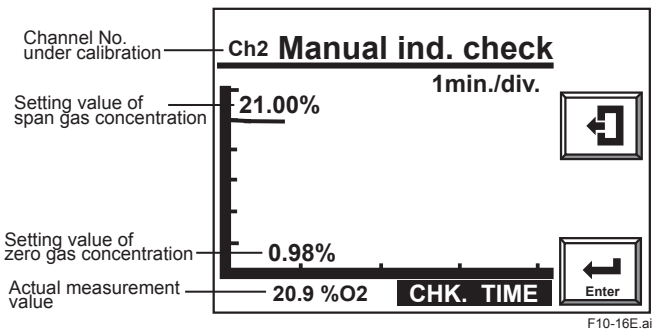

Figure 10.16 Span Indication Check

9) If you touch the Enter key then span gas check ends and you are returned to the Ind. check gas selection display. Close the span gas flow control valve and tighten the lock nut used to prevent it from loosening during measurement.

10) Select [Zero gas ind. check] and touch the Enter key.

11) Open the zero gas flow control valve, and adjust flow rate to 600 ± 60 ml/min.

12) Select [Start ind. check] and touch the Enter key. An oxygen concentration graph like Figure 10.17 is displayed, and [CHK.TIME] status mark flashes. Wait for the graph measured value trace to stabilize. Compare the measured zero gas concentration displayed at the bottom of the display against the certified concentration of zero gas to check for any discrepancy or error.

13) If you touch the Enter key then zero gas check ends and you are returned to the Ind. check gas selection display. Close the zero gas flow control valve and tighten the lock nut used to prevent it from loosening during measurement.

14) Select [Third gas ind. check] and touch the Enter key.

15) Open the third gas flow control valve, and adjust flow rate to 600 ± 60 ml/min.

16) Select [Start ind. check] and touch the Enter key. An oxygen concentration graph like Figure 10.18 is displayed, and [CHK.TIME] status mark flashes. Wait for the graph measured value trace to stabilize. Compare the measured third gas concentration displayed at the lower left of the display against the certified concentration of third gas to check for any discrepancy or error.

17) If you touch the Enter key then third gas check ends and you are returned to the Ind. check gas selection display. Close the third gas flow control valve and tighten the lock nut used to prevent it from loosening during measurement.

18) Select [End]. An oxygen concentration graph (Figure 10.19) is displayed and hold time begins. After the preset time has elapsed then the display reverts to channel select. If you touch the Enter key during hold time then hold time is skipped.

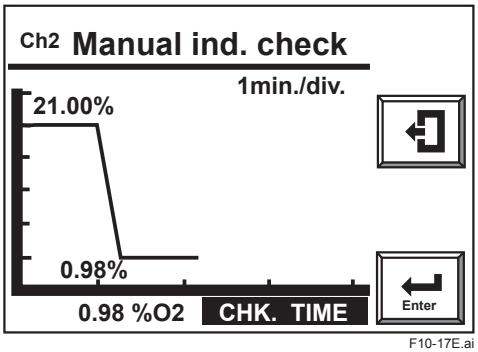

Figure 10.17 Zero Indication Check

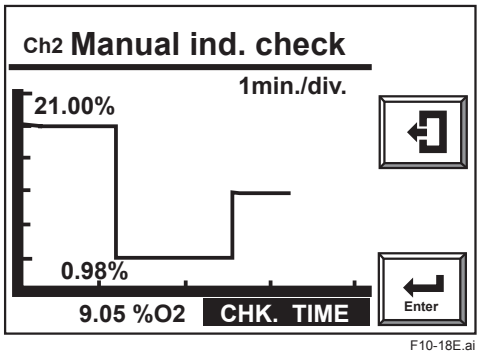

Figure 10.18 Third Gas Indication Check

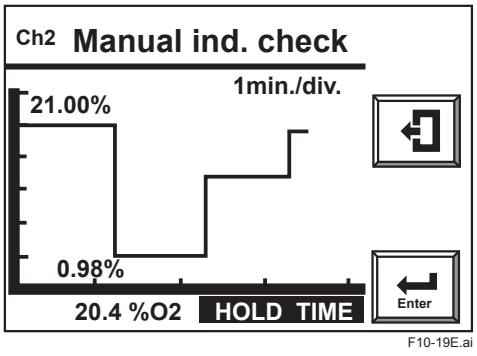

Figure 10.19 Hold Time

Semi-Auto Indication Check

Semi-automatic indication check is started either from the display or by external contacts. When started from the display, only the channel selected on the display is checked. When started by an external contact, all working channels can be checked one channel after another. Assuming that [Span-Zero-Third] is set to points on the [Indication check setup] display, the procedure is described below.

<Procedure>

When started from the display

1) From the basic panel display, touch the Setup key to display the [Execution/Setup]. Select [Indication check].
2) Select [Semi-auto ind. check]. The channel select display of Figure 10.20 is displayed.
3) Select the channel to perform indication check. The screen of Figure 10.21 is displayed.
4) When you select [Start ind. check], the [Semi-auto ind. chk] trend graph of Figure 10.22 is displayed, and Span indication check begins.
5) When the preset check time (same as calibration time) has elapsed, Span indication check ends and Zero indication check begins. Likewise, when the preset check time has elapsed, Zero indication check ends, and third gas check begins.
6) After check time (calibration time) ends, stabilization time begins. After the preset hold (stabilization) time, the instrument reverts to measurement mode.
7) Touch the Reject key to abort indication check. If you abort Span or Zero or third gas indication check then check time is skipped and stabilization time starts. If you touch the Reject key again then stabilization time is also skipped.

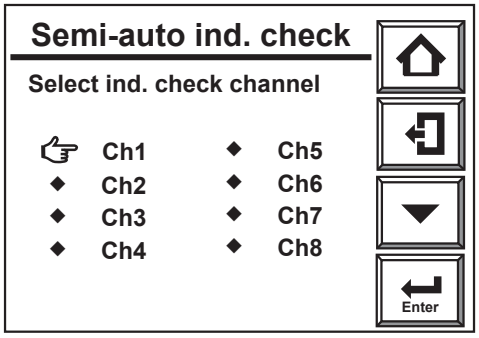

Figure 10.20 Channel Select Display

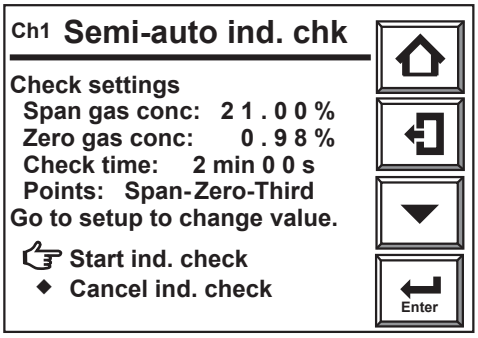

Figure 10.21 Indication Check Start

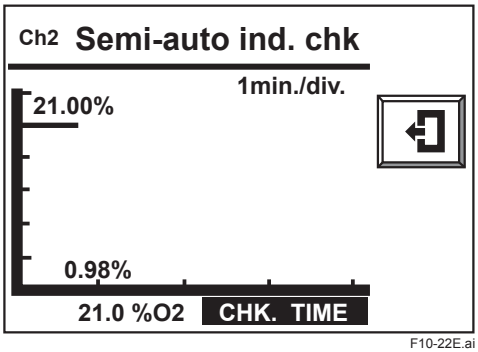

Figure 10.22 Indication Check Graph

Starting Semi-auto Indication Check by a contact input

1) Confirm that on the [Input contacts] display, [Ind. check start] is selected for the contact to be used to start indication check.

2) When the contact input is detected then Indication check starts.

3) To abort Indication check, touch the Reject key. If you abort Span, Zero, or Third gas Indication check then Indication check time is skipped and stabilization time starts. If you touch the Reject key during stabilization time, then stabilization time is skipped and indication check for the next channel starts.

Auto Indication Check

No user action is required to start auto indication check. Auto indication check starts at the preset time and is repeated at the preset interval (same as calibration interval).

CAUTION

Before starting Semi-auto indication or Auto indication check, operate the calibration gas and 3rd check gas solenoid valves and adjust gas flow to 600 ± 60 ml/min for each sensor.

If you skip stabilization time, then “indication check” status also ends, and output hold status is released (unless “under maintenance” hold is set, in which case this hold applies). However, while traces of calibration gas remain in the sensor, the analog output may not be accurate.

10.5 Blow back

This section explains the parameter settings for performing blow back.

10.5.1 Mode

There are three modes of blow back operation: no function, semi-automatic, and automatic.
Blow back is not performed when the mode is set to [No function]. In [Semi-auto] mode, blow back can be started by key operation on the display or by a contact input signal, and then sequentially performed at a preset blow back time and hold time. In [Auto] mode, blow back is automatically performed at preset intervals. For [Semi-auto] or [Auto] modes, blow back is performed one channel at a time until all channels have been covered. The following restrictions apply:

* When [No function] is selected: Blow back is not performed

* When [Semi-auto] is selected: Semi-automatic blow back can be performed.
(Blow back does not start at Automatic blow back start time.)

* When [Auto] is selected: Blow back can be performed in either [Auto] or [Semi-auto] mode.

<Setting Procedure>

1) From the basic panel display, touch Setup key; on the [Execution/Setup] display which appears, select [Maintenance].

2) On the [Maintenance] display, select [Blow back setup] and the Mode selection pulldown allows you to select between [No function], [Semi-auto] and [Auto] (see Figure 10.23).

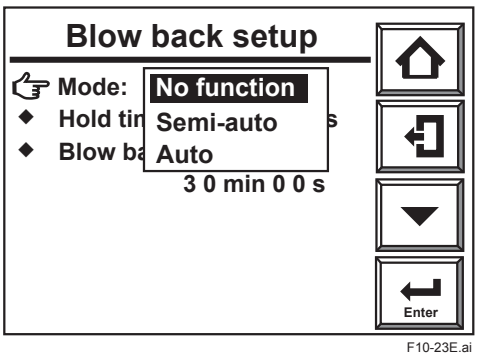

Figure 10.23 Mode Selection

10.5.2 Setting Contacts for Operating Solenoid Valves

The same contacts used for operating solenoid valves to perform channel switching during Auto-calibration (SV-CH1 to SV-CH8) are also used for starting and stopping blow back gas. Therefore, when both blow back and Auto/Semi-auto calibration are used, contact outputs used for operating solenoid valves need to be assigned as shown in Figure10.24. Refer to Figure10.26 for blow back timing chart.

For wiring and piping of blow back solenoid valves, refer to Subsection 4.1.5, “Blow back piping” and Section 5.3, “Wiring and Piping Examples.”

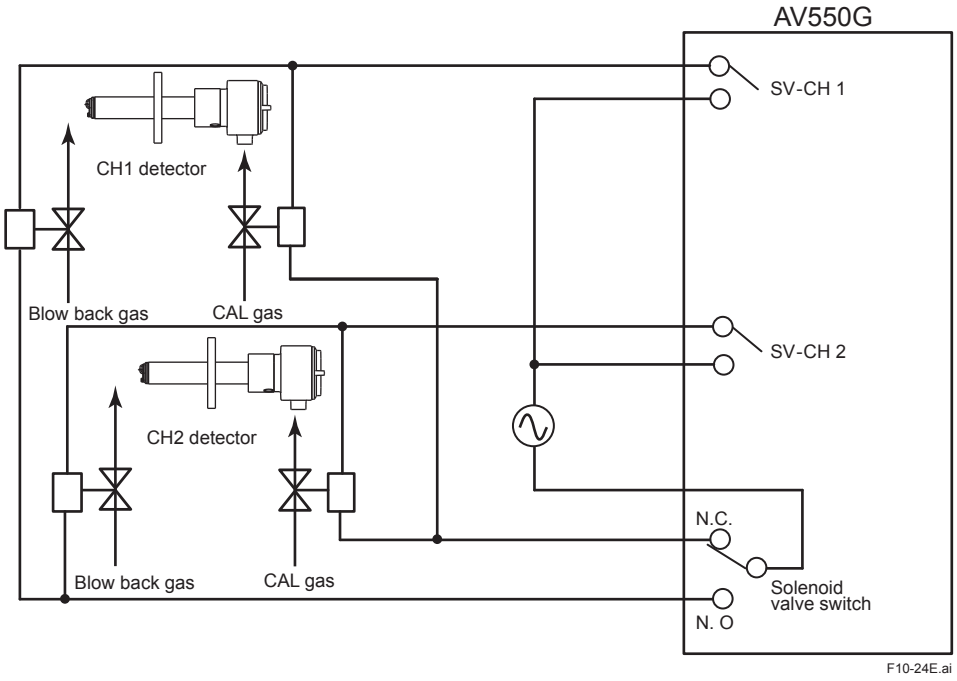

Figure 10.24

<Setting procedure>

1) From the basic panel display touch Setup key; on the [Execution/Setup] display which appears, select [Commissioning] then [Contact setup].
2) Select a contact (Ex. [Output contact 3]) that is not already assigned to another function, then select [Others].
3) For this contact, turn [Blow back] to [ON].

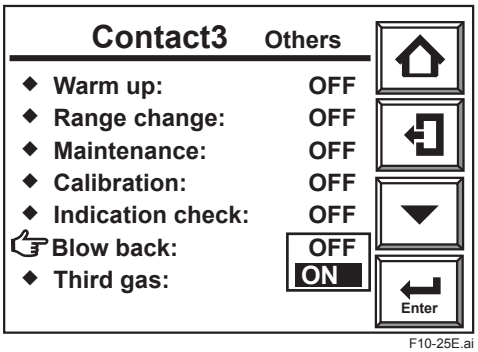

Figure 10.25 Assigning Solenoid Valve Switching Contact

10.5.3 Setting Blow back Start Time

When mode is set to [Semi-auto]:
Hold time and blow back time should be set.

Hold time is the time required from the end of blow back to the restart of measurement. Set the time so that a sample gas that flows through the sensor after blow back can displace the blow back gas in the sensor and thus the output returns to normal. Setting range is from 00 minute 00 second to 60 minutes 59 seconds. Once the blow back starts on a channel, its individual analog output is held at a value preset in the Output hold setup and excluded from averaging group calculations until the preset output hold time has elapsed.

Blow back time is the time for blow back in one channel. Setting range is from 00 minute 00 second to 60 minutes 59 seconds. A timing chart showing blow back time hold time, analog output status, and blow back gas switching solenoid contact action timing is provided in Figure 10.26.

When mode is set to [Auto]:
In addition to the above hold time and blow back time, interval, start date, and start time should be set. The interval between blow back cycles can be set in the range 000 day 00 hour to 255 days 24 hours. Once blow back is started, it is performed for all installed channels. Thus blow back interval must be longer than the sum of blow back time and hold time for all channels.

Start date and start time specify the day and time that auto blow back is first performed.
To set June 21, 2004 at 1:30 pm, set Start date to 21/06/04 and Start time to 13:00.

<Setting procedure>
When the blow back mode is set to [Semi-auto] on the [Blow back setup] display:
[Hold time] and [Blow back time] items appear. Select [Hold time] and then touch the Enter key. A numerical data entry display will appear. Enter the desired value and touch the Enter key. In the same manner, set the Blow back time.

When the blow back mode is set to [Auto] on the [Blow back setup] display:
In addition to [Hold time] and [Blow back time] items, [Interval], [Start date], and [Start time] items appear. Enter the desired values for each item in the same manner as above.

NOTE

Observe the following cautions when setting the blow back timing.

1) When blow back is to be started by a contact input signal, you need to set the relevant contact input signal to Blow back start on the [Input contacts] display.
2) Blow back may be delayed or cancelled by status of the affected channel of by the status of other channels, as explained by Table 10.5.
3) If the (Blow back) Interval setting is shorter than the sum of blow back times plus hold times for all channels, then the system will be in blow back status when the second auto blow back cycle attempts to start. In this case, the second auto blow back will be cancelled.
4) If the (blow back) interval is set to 000 day 00 hour, then auto blow back will not be performed.
5) If you set the start date before the current date, then auto blow back will not start.

Table 10.5 When Auto Blow back conflicts with Other Processing

Blow back \ Other Processing	Purging the channel	Other channel CAL	Indication Check in other channel	Blow back in other channel	Maintenance	Blow back chan. in warmup status	Blow back chan. in ERR status	Blow back chan. now disabled
Semi-auto Blow back	x	x	x	x	x	O	x	x
Auto Blow back	Wait	Wait	Wait	Wait	Wait	O	x	x

O : Perform blow back
X : Cannot perform blow back
Wait : Wait until other ongoing command completion, and is executed.

10.5.4 Operation of Blow back

Figure 10.26 shows blow back timing. To execute blow back by a contact input, use it with an on-time period of 1 to 11 seconds. Once blow back starts, the SV-CH contact output repeatedly opens and closes at an interval of approximately 10 seconds during the preset blow back time. During the blow back time and hold time on a channel, its individual analog output remains held at a value preset in the Output hold setup and excluded from averaging group calculations. After the hold time has elapsed, blow back is started on the next channel.

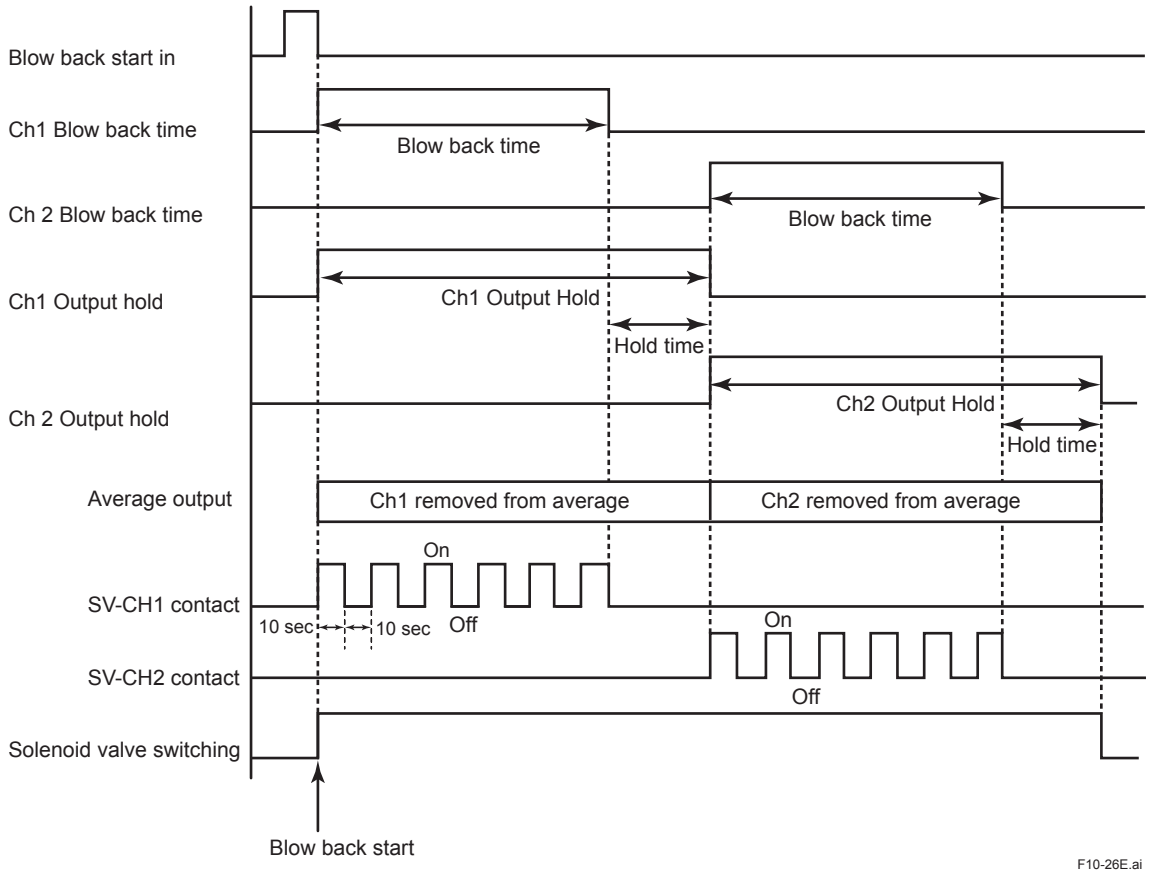

Figure 10.26 Blow back Timing

<Default setting>
Blow back parameters are set as shown in Table 10.6 prior factory shipment or after data initialization.

Table 10.6 Blow back Default Setting

Item	Default
Mode	No function(disabled)
Hold time	3 minutes 00 second
Blow back time	3 minutes 00 second
Blow back interval	30 day 00 hour
Start date	01/01/01
Start time	00: 00

10.5.5 Performing Blow back

Semi-Auto Blow back

Semi-auto blow back can be started from the display or by an external contact input.

<Procedure>
Starting blow back from the display

1) On the basic panel display, touch the Setup key to display the [Execution/Setup] display. Select [Blow back]. Next select [Start blow back] and touch the Enter key. Blow back is performed starting from Channel 1.
2) If a display like Figure 10.27 appears, then mode is set to [No function]. Refer to Subsection 10.5.1, “Mode” and change the mode appropriately.
3) During blow back a display like Figure 10.28 is displayed, with the affected channel number blinking.
4) To abort blow back, you can touch the Reject key to skip the blow back time and enter the hold time. If you touch the Enter key here, then blow back for the next channel starts; if you touch the Reject key, then hold time is skipped and you revert to measurement mode.

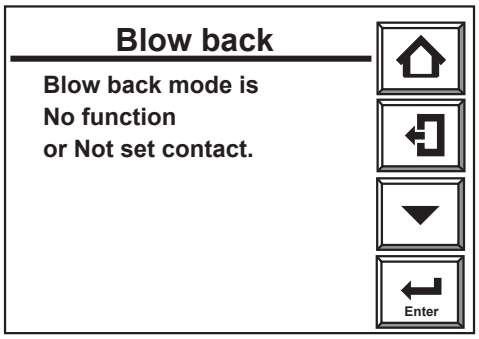

Figure 10.27 No Function (Disabled)

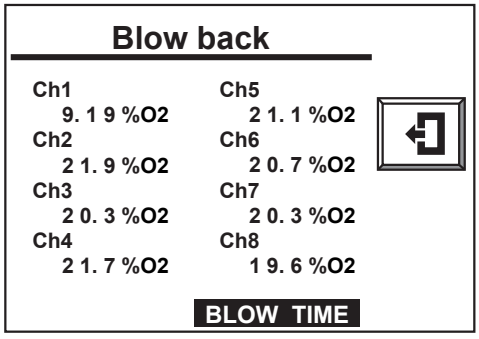

Figure 10.28 Performing blow back

Starting Blow back by a Contact input

1) Confirm that on the [Input contacts] display, [Blow back start] is selected for the contact to be used to start blow back.
2) In measurement mode (with the basic panel display displayed) when the contact input is detected then blow back starts.
3) To abort blow back, touch the Reject key. Touch the Reject key to skip the blow back time and enter the hold time. If you touch the Reject key again during hold time, then hold time is skipped and you revert to the basic panel display; if instead you touch the Enter key then blow back for the next channel starts.

Auto Blow back

No user action is required to start blow back at the preset time and repeat it at the preset interval.

10.6 Purging

At the beginning of calibration, condensation that has developed in the calibration gas piping may be blown onto the sensor, causing sudden cooling and damage to the sensor. Purging involves passing span calibration gas through the piping for a preset time before warmup, in order to remove any such condensation. If the cell temperature is 100°C or greater, then purging cannot be performed. While purging is being performed, a [Purge] status mark is displayed on the basic panel display, as shown in Figure 10.31. Purging is performed in sequence, starting with the smallest channel number. The timing of purging is shown in Figure 10.29.

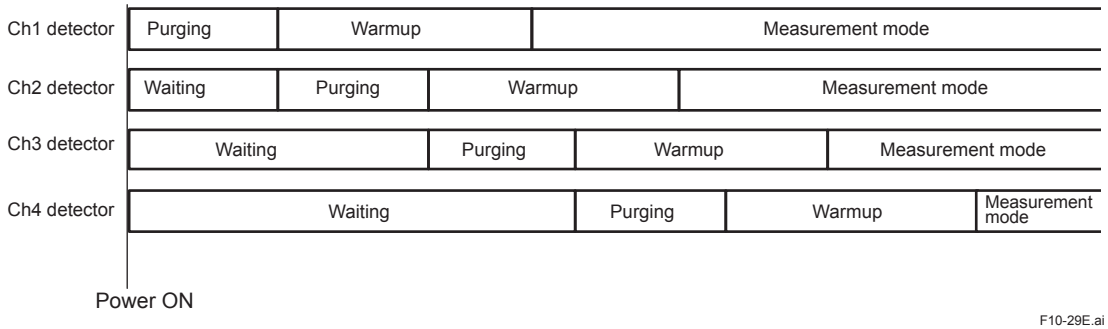

Figure 10.29 Purging Timing

NOTE

1) When using hot swap functions to start a single specific channel, purging for that channel alone is performed (there is no effect on other channels).
2) While any such specific individual channel is being purged, then manual or semi-auto calibration or indication check cannot be started (for any channel).
3) While any such specific individual channel is being purged, then auto calibration, auto indication check or auto blow back (for any channel) will wait until it ends.
4) Purging requires the same piping and wiring as calibration and indication check.

<Setting procedure>

1) From the basic panel display, touch the Setup key to display the [Execution/Setup] display.
2) Select [Commissioning] and the Commissioning display appears.
3) Select [Others] then [Purging] and a display such as Figure 10.30 is appears.
4) Touch the Enter key and a numerical entry display appears. Enter the desired purging time between 0 and 60 (minutes). If you enter 0 then purging is disabled.

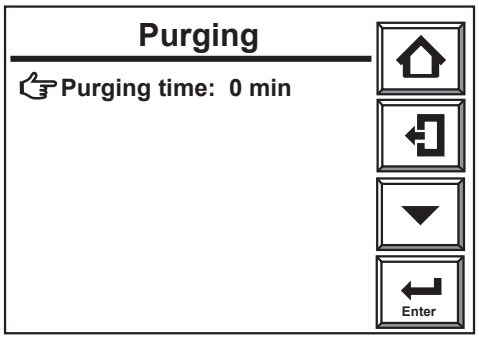

Figure 10.30 Purging Time Setting

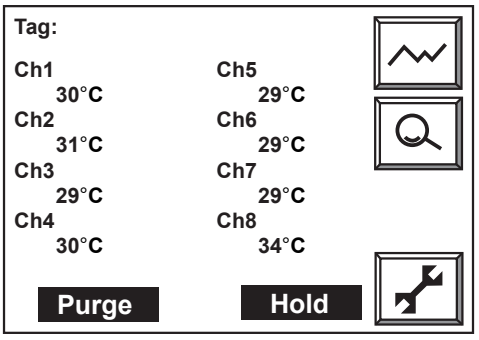

Figure 10.31 Display During Purging

<Shipping-time defaults>

At shipping-time (or after resetting parameters) purging time is reset to [0].

10.7 Parameter Initialization

Parameter settings can be initialized to the factory default settings. Initialization can be done for all parameters or for individual parameters. The parameters that can be initialized and their defaults are listed in Table 10.7.

<Initialization procedure>

1) On the basic panel display, touch the Setup key to display the [Execution/Setup] display.
2) Select [Commissioning], next [Others] then [Defaults]. A display like Figure 10.32.1 appears.
3) Select the desired item to be initialized then a display like Figure 10.32.2 appears.
   Select [Defaults start] then initialization starts.
4) When initialization completes then you are returned to a display like Figure 10.32.2.

CAUTION

Do not turn off power during initialization. Otherwise, initialization will not be performed properly

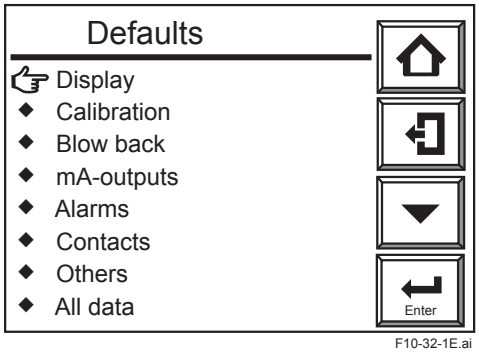

Figure 10.32.1 Defaults Display

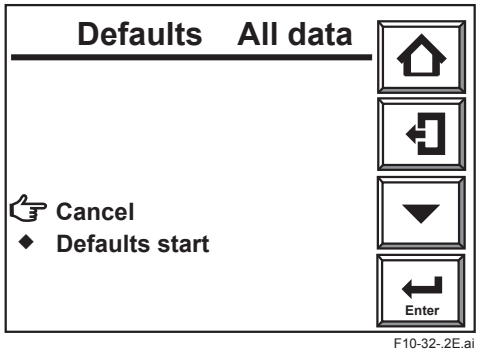

Figure 10.32.2 "Initialize All Data" Start Display

Table 10.7 Initialization Parameters and Defaults -part1

Item	Initialization Parameter		Default
Display	Tag name		Deleted
	Trend Graph	Displayed channels	All ON
		Sampling interval	30 sec.
		Graph upper limit	25.0% O_2
		Graph lower limit	0.0% O_2
	Auto Return Time		0 min. (disabled)
	Display contrast Medium		Medium
	Display Auto power off		0 min (disabled)
	Display language		Not affected
CAL Indication check	Mode		Manual
	Points		Span - Zero
	Zero gas concentration		1.00% O_2
	Span gas concentration		21.00% O_2
	Hold time		3 min. 00 sec
	Calibration / Indication check time		3 min . 00 sec.
	Calibration / Indication check interval		1 day 00 hrs.
	Start date (day/month/year)		01 / 01 / 01
	Start time		00 : 00
Blow back	Mode		No function (disabled)
	Hold time		3 min 00 sec
	Blow back time		10 min. 00 sec.
	Blow back interval		30 days 00 hours
	Start date (day/month/year)		01 / 01 / 01
	Start time		00 : 00.
mA - output	Output range	Minimum oxygen concentration	0% O_2
		Maximum oxygen concentration	25% O_2
		Output smoothing time constant	0 sec. (disabled)
		Output mode	Linear
	Output hold setting	During warmup, purging	4 mA
		Preset value of during warmup, purging	4 mA
		Under maintenance	Last measured value
		Preset value of under maintenance	4 mA
		Under calibration, Indication check, During Blow back	Last measured value
		Preset value	4 mA
		Error	Last measured value
		Preset value of error	4 mA
		Averaging group invalid	4 mA
		Preset value of averaging group invalid	4 mA
		Process alarm	Last measured value
		Preset value of process alarm	4mA

Continued on the following page

Table 10.7 Initialization Parameters and Defaults - part 2

Item	Initialization Parameter			Default
Alarms	Hysteresis			0.1% O2
	Alarm contact action delay			3 sec.
	High High Alarm			OFF
	Alarm setting of High High Alarm			100.0% O2
	High Alarm			OFF
	Alarm setting of High Alarm			100.0% O2
	Low Alarm			OFF
	Alarm setting of Low Alarm			0.0% O2
	Low Low Alarm			OFF
	Alarm setting of Low Low Alarm			0.0% O2
	Instrument internal temperature alarm log			Deleted
	Removal of channel in alarm condition			NO
Contacts	Contact output 1	Alarms		All OFF
		Other settings	During warmup	ON
			During output range switching	OFF
			During maintenance	OFF
			During calibration	OFF
			During indication check	OFF
			During blow back	OFF
			3rd check gas	OFF
		Relay state when powered		Energized
	Contact output 2	Alarms		All OFF
		Other setting	During warmup	OFF
			During output range switching	OFF
			During maintenance	OFF
			During calibration	ON
			During indication check	OFF
			During blow back	OFF
			3rd check gas	OFF
		Relay state when powered		Energized
	Contact output 3	Alarms	High High Alarm	OFF
			High Alarm	ON
			Low Alarm	ON
			Low Low Alarm	OFF
			Calibration coefficient alarm	OFF
			Calibration gas pressure low	OFF
			Error	OFF
			Instrument internal temperature alarm	OFF
		Other settings		All OFF
		Relay state when powered		Energized
	Contact output 4	Alarms	High High Alarm	OFF
			High Alarm	OFF
			Low Alarm	OFF
			Low Low Alarm	OFF
			Calibration coefficient alarm	OFF
			Calibration gas pressure low	OFF
			Error	OFF
			Instrument internal temperature alarm	OFF
		Other settings		All OFF
		Relay state when powered		Energized
	Contact input 1		Function	No function (disabled)
	Contact input 2		Action	Normally closed

Continued on the following page

Table 10.7 Initialization Parameters and Defaults -part 3

Item	Initialization Parameter		Default
Others	Averaging	Averaging interval	1 hour
		Max/Min Average monitoring Interval	24 hours
	Fuel Setup	Moisture content in exhaust gas	0.00 m^3/kg (m^3)
		Theoretical air volume	1.00 m^3/kg (m^3)
		X value	1.00
		Absolute humidity of outside atmosphere	0.0000 kg/kg
	Detector type		ZR22G
	Sample gas selection		Wet
	Units		°C
	Asymmetry alarm		Disable
	Averaging group setting		All ON
	Purging time		0 min. (disabled)
	Clock		Not affected
	Channel card power		All installed cards are enabled

10.8 Methods of Operating Valves in the ZA8F Flow Setting Unit

The ZA8F Flow Setting Unit is used for manual calibration as described in Subsection 1.1.1. Calibration in such a system is to be manually operated. So, you have to operate the valve of the Flow Setting Unit each time calibration is made (starting and stopping the calibration gas flow and adjusting the flow rate). For operation of the Averaging converter, see Section 7.9 Calibration, earlier in this manual.

10.8.1 Preparation Before Calibration

To operate the ZA8F Flow Setting Unit, prepare for calibration as follows:

(1) Check for a complete closing of the zero gas flow setting valve in the unit and open the regulator valve for the zero gas cylinder until the secondary pressure equals sample gas pressure + approx. 50 kPa (or sample gas pressure plus approx. 150 kPa when a check valve is used, maximum pressure rating is 300 kPa).

(2) Check that the oxygen concentration of the zero gas and span gas (instrument air 21 vol% O_2) in the cylinder is set in the Averaging converter.

10.8.2 Operating the Span Gas Flow Setting Valve

The following description is given assuming that instrument air, the same as the reference gas, is used as the span gas.

(1) When the display shown in Figure 10.33 appears during calibration, open the span gas flow setting valve of the flow setting unit and adjust the flow rate to 600 ± 60 ml/min. Turn the valve slowly counterclockwise after loosening the lock nut if the valve has a lock nut. To check the flow rate, use the calibration flowmeter.
If the measurement gas pressure is extremely high, adjust the measurement gas pressure to obtain pressures (Refer to Table 10.8) ± 10%.

Table 10.8

Measurement gas pressure (kPa)	50	100	150	200	250
Flowrate (ml/min)	500	430	380	350	320

(2) Adjust the flow rate and select [Valve opened] from the [Manual cal.] display.
Check the Trend graph display to see that the measured value is stabilized. Then press the Enter key. The [Manual cal.] display shown in Figure 10.34 appears.
Close the span gas flow setting valve to stop the span gas (air) flow. If the valve has a lock nut, be sure to tighten the lock nut to prevent any leakage of the span gas into the sensor during measurement.

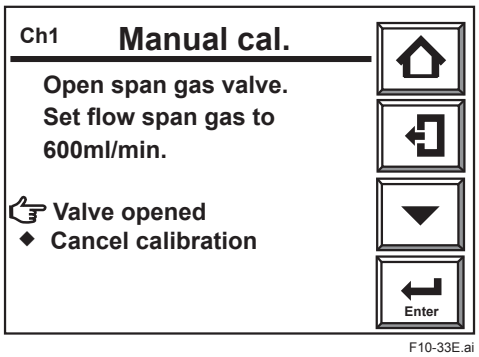

Figure. 10.33 Manual Calibration Display

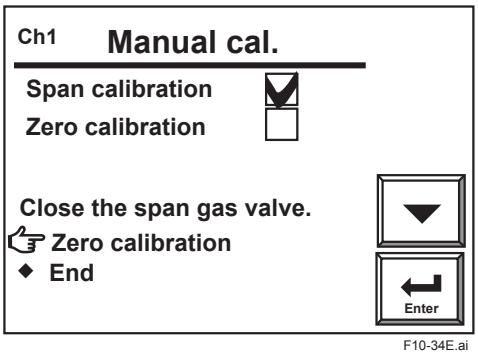

Figure.10.34 Span Calibration Complete

10.8.3 Operating the Zero Gas Flow Setting Valve

Operate the zero gas flow setting valve during zero calibration in the following procedures:

(1) When the display shown in Figure 10.35 appears during calibration, open the zero gas flow setting valve of the flow setting unit and adjust the flowrate to 600 ± 60 ml/min. To rotate the valve shaft, if the valve has a lock nut loosen the lock nut and slowly turn it counterclockwise. To check the flowrate, monitor the calibration gas flow meter.
If the measurement gas pressure is extremely high, adjust the measurement gas pressure to obtain pressures (Refer to Table 10.8) ± 10%.

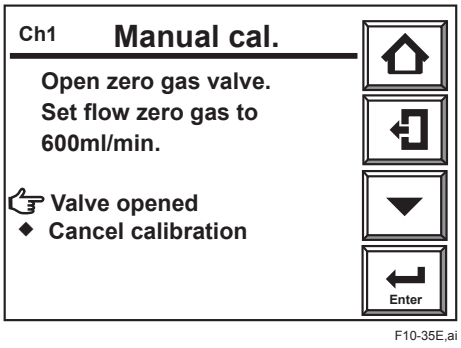

Figure 10.35 Manual Calibration Display

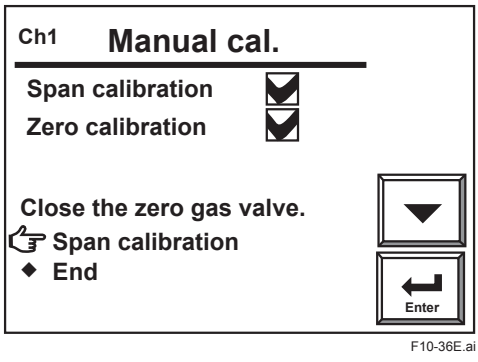

Figure 10.36 Zero Calibration Complete

(2) Adjust the flow rate and select [Valve opened] from the [Manual cal.] display.
Check the Trend graph display to see that the measured value is stabilized. Then press the Enter key. The [Manual cal.] display shown in Figure 10.36 appears.
Close the zero gas flow setting valve to stop the zero gas flow. If the valve has a lock nut, be sure to tighten the lock nut to prevent any leakage of the zero gas into the sensor because the valve may become loose during measurement.

10.8.4 Operation After Calibration

No special operation of the instrument is needed after calibration. However, it is recommended that the pressure reducing valve for the zero gas cylinders be closed because calibration is not required so often.

11. Inspection and Maintenance

This chapter describes the inspection and maintenance procedures that are performed to maintain reliable performance of the AV550G Averaging Converter and to keep it in good operating condition. The procedure for adding channel cards is also explained in this chapter.

WARNING

Do NOT touch the probe if it has been in operation immediately just before being checked. (The sensor at the tip of the probe heats up to 750°C during operation. If you touch it, you will get burned.)

CAUTION

When checking the detector, carefully observe the following:

(1) Do not subject the probe to shock or cool it rapidly.
The sensor is made of ceramic (zirconia). If the detector is dropped or bumped into something, the sensor may be damaged and no longer work.

(2) Do not reuse a metal O-ring to seal the cell assembly. If you replace the cell or remove it from the probe for checking, be sure to replace the metal O-ring. Otherwise, the furnace gas may leak, and then the leaking corrosive gas will cause the built-in heater or thermocouple to go open circuit, or the detector may corrode.

(3) Handle the probe with care so that the dust-filter mounted screws on the tip of the probe do not hurt your finger(s).

(4) Before opening or closing the terminal box, first remove dust, sand, or the like from the terminal box cover.

11.1 Removing and Attaching the Front Cover

11.1.1 Removing the Front Cover

1) Loosen the 4 knob bolts by hand, and then loosen the lock screw with the Allen wrench supplied.
2) Remove the front cover by lifting up slightly then pulling away from the case.

11.1.2 Attaching the Front Cover

1) Attach the front cover, aligning the slots on the sides of the cover with the knob bolts on the case, and then pull the cover down until it is seated firmly.
2) Hand tighten the knob bolts, and then securely tighten the lock screw with the Allen wrench supplied.

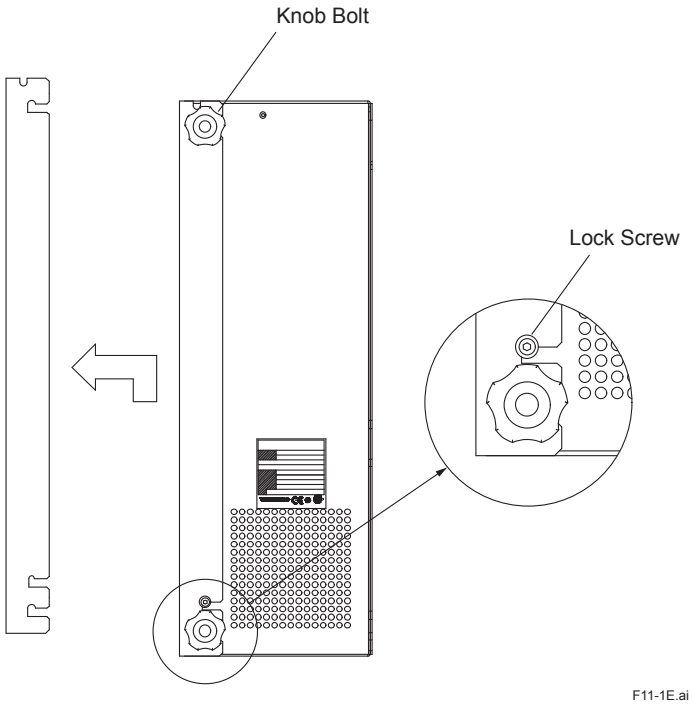

Figure 11.1 How to Remove/Attach the Front Cover

11.2 Hot Swap Function

The averaging converter features a function that allows a desired detector to be disconnected/ reconnected for inspection or maintenance just by turning off the power of the relevant channel without system shutdown. This function is called hot swap.
While power to a channel is being removed, the channel is automatically eliminated from the averaging groups and does not affect any other channels. Since the output circuits for both the channel card and the heater of the corresponding channel are mechanically cut off from the other circuits, maintenance and inspection work can be done safely (Figure 11.2).

When the cannel is restored by the hot swap function after inspection or maintenance, the cannel card will be included in the original averaging groups after warm-up period.
The individual analog output is held at a value preset in the “mA-output setup” during warm-up period.

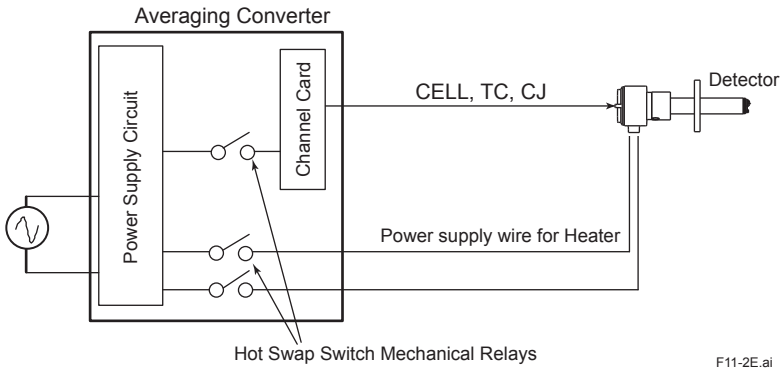

Figure 11.2

<Procedure>

1) On the basic panel display touch the Setup key. The [Execution/Setup] display will appear.
2) Use the Cursor key to move the cursor to Maintenance. Touch the Enter key.
3) On the [Maintenance] display, select [Channel card power]. Touch the Enter key. A display shown in Figure 11.3 will appear.
4) On the [Channel card power] display, select the channel of a detector to be disconnected for inspection or maintenance. Touch the Enter key.
5) A dropdown menu (Disable/Enable) will appear. Select [Disable] and touch the Enter key. Make sure that all status lamp(s) of disabled channel(s) have turned off.

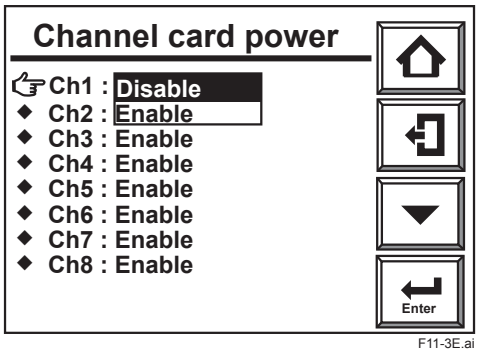

Figure 11.3 Channel Card Power (Hot Swap) Display

WARNING

Before the inspection or maintenance of a detector, make sure that the power has been turned off by measuring the voltage of the heater terminal in the terminal box of the detector for more than two seconds with a voltmeter.

NOTE

The state (Enable/Disable) of the hot swap function is stored even after the power switch of the averaging converter is turned off. When the power switch of the averaging converter is turned on, power is not supplied to the disabled channel(s).

11.3 Inspection and Maintenance of the Detector

11.3.1 Cleaning the Filter in Sensor Assembly

If the filter in the tip of the sensor assembly gets blocked by dirt or the like, this will affect measurement accuracy. If it cannot be cleaned satisfactorily by blowing compressed air through it, use a brush to clean it.

11.3.2 Cleaning the Calibration Gas Tube

The calibration gas, supplied through the calibration gas inlet of the terminal box into the detector, flows through the tube and comes out at the tip of the probe. The tube might become clogged with dust from the sample gas. If you become aware of clogging, such as when a higher pressure is required to achieve a specified flow rate (600 ± 60 ml/min), clean the calibration gas tube.

To clean the tube, follow these steps:

(1) Remove the detector from the installation assembly.

(2) Following Subsection 11.3.3, later in this manual, remove the four bolts (and associated spring washers) that tighten the sensor assembly, and the pipe support as well as the U-shaped pipe.

(3) Use a rod 2 to 2.5 mm in diameter to clean the calibration gas tube inside the probe.
In doing this, keep air flowing from the calibration gas inlet at about 600 ml/min and insert the rod into the tube (3-mm inside diameter). However, be careful not to insert the rod deeper than 40 cm for a general-purpose detector, or 15 cm for a high temperature detector.

(4) Clean the U-shaped pipe. The pipe can be rinsed with water. However, it should be dried out thoroughly before reassembly.

(5) Restore all components you removed for cleaning. Follow Subsection 11.3.3 to restore all components in their original positions. Be sure to replace the O-ring(s) with new ones.

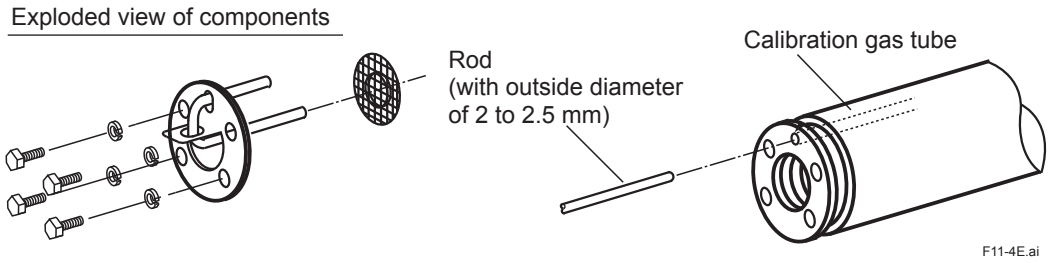

Figure 11.4 Cleaning the Calibration Gas Tube

11.3.3 Replacing the Sensor Assembly

The performance of the sensor (cell) deteriorates as its surface becomes soiled during operation. Therefore, you have to replace the sensor when its life expectancy expires, for example, when it can no longer satisfy a zero correction ratio of 100 ± 30 % or a span correction ratio of 0 ± 18 %. In addition, the sensor assembly is to be replaced if it becomes damaged and can no longer operate during measurement.

If the sensor becomes no longer operable (for example, due to breakage), investigate the cause and remedy the problem as much as possible to prevent recurrence.

CAUTION

- If the sensor assembly is to be replaced, allow enough time for the detector to cool down from its high temperature. Otherwise, you may get burned.
- If the cell assembly is to be replaced, be sure to replace the metal O-ring and the contact together. Additionally, even in a case where the cell is not replaced, if the contact becomes deformed and cannot make complete contact with the cell, replace the contact.
- If there is any corroded or discolored area in the metal O-ring groove in which the contact is embedded, sand the groove with sandpaper or use a metal brush, and then sand further with a higher grade of sandpaper (no. 1500 or so), or use an appropriate metal brush to eliminate any sharp protrusions on the groove. The contact's resistance should be minimized.
- Use sensor assemblies manufactured in or after Sept. 2000: the serial number on the side of the sensor assembly should be 0J000 or later (for example: 0K123, 1AA01 etc)

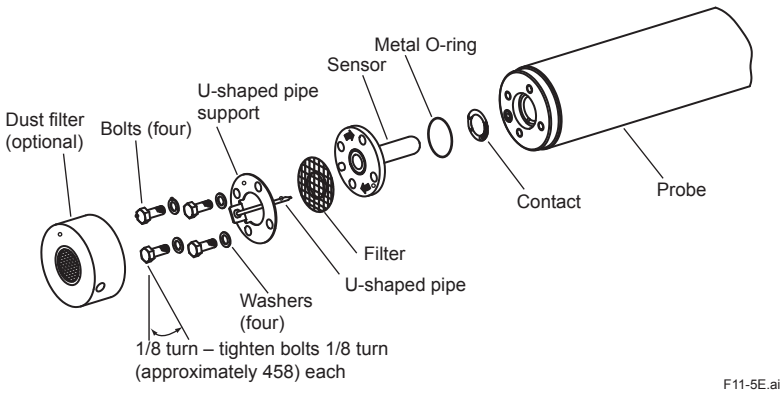

Figure 11.5 Exploded View of Sensor Assembly

NOTE

Optional Inconel bolts have a high coefficient of expansion. If excess torque is applied while the bolts are being tightened, abnormal strain or bolt breakage may result. So, tighten the bolts following the instructions given above.

1. Identifying parts to be replaced

In order not to lose or damage disassembled parts, identify the parts to be replaced from among all the parts in the sensor assembly. Normally, replace the sensor, metal O-ring and contact together at the same time. If required, also replace the U-shaped pipe, bolts, filter and associated spring washers.

2. Removal procedures

(1) Remove the four bolts and associated washers from the tip of the detector probe.

(2) Remove the U-shaped pipe support together with the U-shaped pipe. Remove filter also.

(3) Pull the sensor assembly toward you while turning it clockwise. Also, remove the metal O-ring between the assembly and the probe. Remove filter also.
(When replacing the assembly, be careful not to scratch or dent the tip of the probe with which the metal O-ring comes in contact (the surface with which the sensor flange also comes in contact). Otherwise, the sample gas will not be sealed.)

(4) Use tweezers to pull the contact out of the groove in the tip of the probe.

(5) Clean the sensor assembly, especially the metal O-ring contact surface to remove any contaminants adhering to that part. If you can use any of the parts from among those removed, also clean them up to remove any contaminants adhering to them.
(Once the metal O-ring has been used, it cannot be reused. So, be sure to replace it.)

3. Part assembly procedure

(1) First, install the contact. Being careful not to cause irregularities in the pitch of the coil spirals (i.e., not to bend the coil out of shape), place it in the ringed groove properly so that it forms a solid contact.

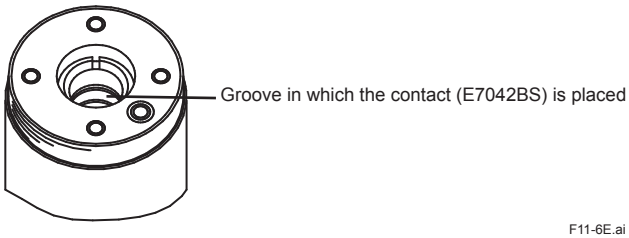

Figure 11.6 Installing the Contact

(2) Next, make sure that the O-ring groove on the flange surface of the sensor is clean. Install the metal O-ring in that O-ring groove, and then insert the sensor in the probe while turning it clockwise. After inserting it until the metal O-ring comes in contact with the probe's O-ring contact surface, properly align the U-shaped-pipe insertion holes with the bolt openings.

(3) Attach the U-shaped pipe to its support with filter, then fully insert the U-shaped pipe and its support into the probe.

(4) Coat the threads of the four bolts with anti-seize grease and then screw them in along with the washers. First, tighten the four bolts uniformly by hand, and then use a torque wrench to tighten all areas of the metal O-ring uniformly, that is, to make sure the sensor flange is perfectly horizontal to the O-ring's working face in the probe.
This is done by tightening first one bolt and then its opposing bolt each 1/8 turn, and then one of the other bolts followed by its opposing bolt, each also 1/8 turn. This continues in rotating fashion until they are all fully tightened with the torque wrench preset to approximately 5.9 N • m. If they are not uniformly tightened, the sensor or heater may be damaged.
Replacement of the sensor assembly is now complete. Install the detector and restart operation. Calibrate the instrument before making a measurement.

11.3.4 Replacement of the Heater Unit

This Subsection describes the replacement procedure for the heater unit.

The sensor or ceramic heater-furnace core internal structure is subject to fracturing, so do NOT subject it to strong vibrations or shock. Additionally, the heater unit reaches high temperatures and is subjected to high voltages. So, maintenance services should be performed after the power is off and the heater unit temperature has returned to normal room temperature.

For details, refer to IM11M12A01-21E “ Heater Assembly ”.

NOTE

If the heater strut assembly cannot be removed because a screw has fused to its thread, one of our service representatives can fix it.

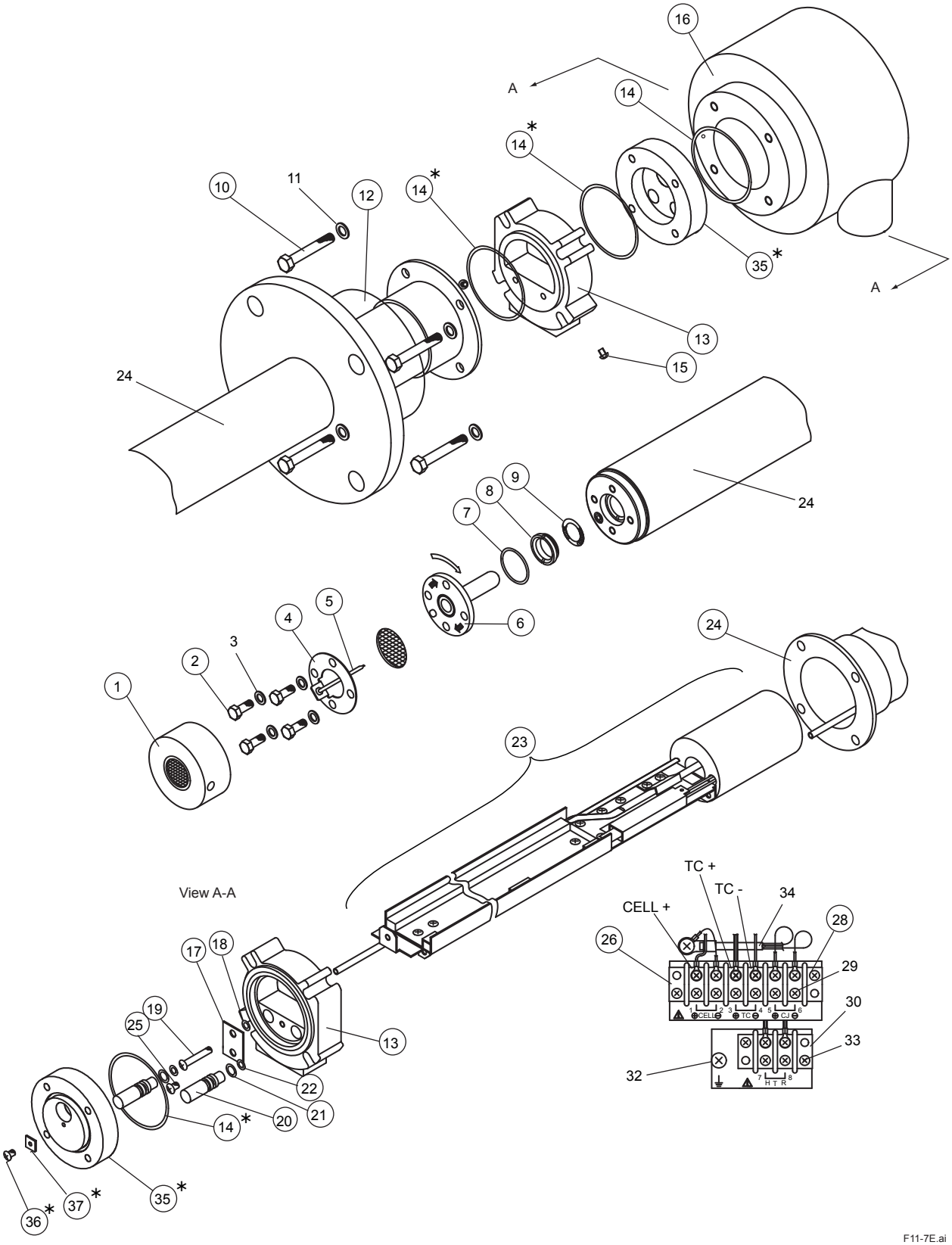

Figure 11.7 Exploded View of Detector (When pressure compensation specified)

Note: The parts marked by * is not equipped with the types except the pressure compen-sation type.

Replacement of heater strut assembly (ZR22G : Style S2 and after)

Refer to Figure 11.7 as an aid in the following discussion.

Remove the cell assembly (6), following Subsection 11.3.3, earlier in this manual. Open the terminal box (16) and remove the three terminal connections – CELL +, TC + and TC -. Before disconnect the HTR terminals, remove the terminal block screw (28). Keeping the other terminal remaining to be connected. Disconnect the two HTR connections.(These terminals have no polarity.)

Remove the two screws (15) that fasten the cover (12) and slide it to the flange side.
Remove the four bolts (10) and terminal box (16) with care so that the already disconnected wire will not get caught in the terminal box.

In case of the pressure compensation type detector, remove the screw (36) and the plate (37) on the adapter (35). Remove the adapter (35), drawing out the wires of the heater strut assembly (23) from it.

Loosen Screw (19) until the plate (17) of heater strut assembly (23) can be removed. There's no need to remove O-ring (18) which prevents Screw (19) from coming out. Pull out connector (13).
Loosen and remove the screw for the heater assembly fixation (8) with a special wrench (part no. K9470BX or equivalent) and then remove the heater strut assembly (23) from the detector (24).

To reassemble the heater strut assembly, reverse the above procedure:

Insert the heater strut assembly (23) into the detector (24), while inserting the calibration pipe in the detector (24) into the heater section in the heater strut assembly (23) as well as in the bracket hole. Coat the screw for the heater assembly fixation (8) with grease (NEVER-SEEZ: G7067ZA) and tighten the screw for the heater assembly fixation (8) with a special wrench (part no. K9470BX or equivalent) with a tightening torque of 12N· m ± 10 percent.

Next, to install the O-rings (22) on the calibration-gas and reference-gas pipes, disassemble the connector (13) in the following procedure:

First, remove the screw (25) and then remove the plate (17) and two caps (20). If the O-ring (22) remains in the hole, pull them out from the back. Pass the heater and thermocouple leadwire through the connector (13). Also, pass the calibration-gas and referencegas pipes through the opening of the connector (13). If the O-ring (22) fails, replace it with a new one.

Push the two caps (20) into the associated opening of the connector (13). Insert the plate (17), aligning it with the groove of the cap (20), and tighten it with the screw (25). If you attempt to insert the calibration-gas and reference-gas pipes into the connector (13) without disassembling the connector (13), the O-ring may be damaged. Tighten Screw (19) to the plate (17) of heater strut assembly (23) until connector (13) can't move.

Reassemble in reverse order to the above disassembly procedure.

The two wires with ceramic insulators from the heater strut assembly are heater wires, and the single-core shielded wire is the cell signal + terminal; for the two-core shielded cable, the semi-translucent rubber-sheathed wire is the thermocouple + terminal, and the other wire is the ─ terminal. (If the wires are marked, match the markings with those on the terminal board).

When installing the sensor (cell) (6), replace the metal O-ring (7) with a new one.

11.3.5 Replacement of Dust Filter

Set the dust filter (1) in place using a special pin spanner (with a pin 4.5 mm in diameter: part no. K9471UX or equivalent). If a dust filter that has already been replaced once is used again, apply grease (NEVER-SEEZ: G7067ZA) to the threads of the dust filter.

11.3.6 Replacement of O-ring

The detector uses three different types of O-rings (14), (21), and (22). One O-ring alone (14), or two O-rings (21) and (22) are used. (For a pressure-compensating model, two O-rings are used for individual uses. Two O-rings (21) and (22) are used for reference-gas sealing and require periodic replacement.

	Part No.	Description
(7)	K9470BJ	Metal O-ring
(14)	K9470ZS	Metal O-ring with grease
(21) (22)	K9470ZP	Two pairs of O-rings with grease

11.3.7 Cleaning the High Temperature Probe Adapter

CAUTION

Do NOT subject the probe of the High Temperature Probe Adapter (ZO21P) to shock.
This probe uses silicon carbide (SiC) which may become damaged if it is subjected to a strong shock or thermal shock.

The high temperature detector is structured so that the gas to be measured is directed toward the detector with the high temperature probe adapter. Therefore, if the probe or the sample gas outlet clogs, a precise measurement is no longer possible because of no gas flow. If you use the high temperature detector, you have to inspect it periodically and, if any part of it is significantly clogged with dust, clean it.

Dust found sticking to the probe should be blown off. If any dust still remains after the blowing, clean it with a metal rod, etc., inserted. In addition, if dust is found on the auxiliary ejector assembly or needle valve (choke) at the sample gas outlet, remove these parts from the high temperature probe adapter and then clean them. To remove dust, blow air on them or rinse them with water.

11.3.8 Stopping and Re-starting Operation

<Stopping Operation>

When operation is stopped, take care of the following so that the sensor of the detector cannot become unused.

CAUTION

When operating an instrument such as boiler or industrial furnace is stopped with the zirconia oxygen analyzer operation, moisture can condensate on the sensor portion and dusts may stick to it.

If operation is restarted in this condition, the sensor which is heated up to 750° C may become permanently contaminated. The dust can greatly degrade sensor performance. If a large amount of water is condensed, the sensor can be broken and never re-useful.

To prevent the above nonconformity, take the following action when stopping operation.

(1) If possible, keep on supplying the power to converter and flowing reference gas to the sensor. If impossible to do the above, remove the detector.

(2) If impossible to supply the power or remove the detector, at least keep on flowing air at 600 ml/min into the calibration gas pipe.

<Restarting Operation>

When restarting operation, be sure to flow air, for 5-10 minutes, at 600 ml/min into the calibration gas pipe before supplying the power to converter.

This is not necessary if the purging is specified and the detector is configured so that the calibration gas is introduced before warm-up.

11.4 Inspection and Maintenance of the Averaging Converter

The averaging converter does not require routine inspection and maintenance. This section describes inspections performed at the time of periodic maintenance service, part replacement, and addition of channel cards.

11.4.1 Fuse Replacement

The averaging converter has fuses for detector heaters of channels CH1 to CH4 in the basic power supply unit and fuses for detector heaters of channels CH5 to CH8 in the expansion power supply unit. Fuses are inserted in both poles of the heater of each channel. When the fuse blows out, follow the procedure below to replace it.

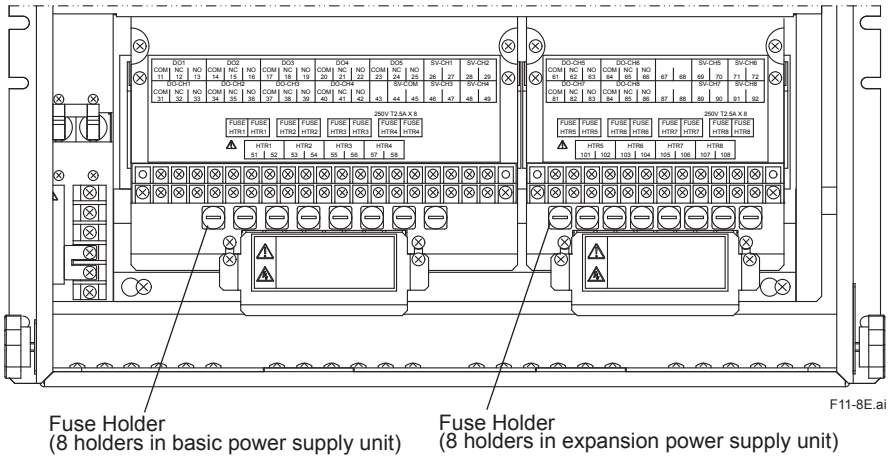

Figure 11.8

WARNING

To work safely, turn off the power to the averaging converter at the external breaker and position the power switch to “O (OFF)” before replacement.
After replacement, position the power switch to “I (ON)”, attach the front cover, and then apply the power to the averaging converter.

<How to replace the fuse>

1) Before replacement, turn off the power to the averaging converter at the external breaker.

2) Remove the front cover, and position the power switch to “O (OFF)”.

3) Remove the fuse from its holder. Using an appropriate size flat blade screwdriver, turn the fuse holder cap counterclockwise until it stops. Pull out the cap. The fuse will come out together with the cap.

4) Use a recommended fuse, shown below, or equivalent for replacement. Attach a new fuse to the cap, place in the fuse holder, and push and turn the cap clockwise until it stops with the flat blade screwdriver.
Fuses used in the averaging converter are as follows.

Maximum rated voltage:	250 V
Maximum rated current:	2.5 A
Type:	Time lag fuse
Compliance:	UL, CSA, VDE, Japan's Electrical Appliance and Material Safety Law
Part number:	A1112EF

5) It is recommended that the fuse be replaced every two years even if it has not blown.

6) Position the power switch to "I (ON)", and attach the front cover.

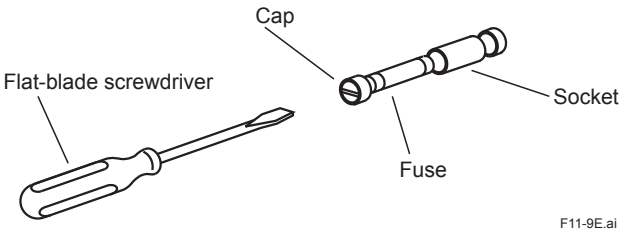

Figure 11.9 How to replace the fuse

CAUTION

If a replaced fuse blows out immediately, there may be a problem in the internal circuit of the averaging converter, the detector, or the wiring between the averaging converter and the detector. Carefully investigate the cause of fuse failure. If the cause is unknown, contact our service office.

11.4.2 Cleaning

Use a dry soft clean cloth for cleaning during inspection or maintenance.

11.5 Adding Channel Cards

WARNING

To work safely, turn off the power to the averaging converter at the external breaker and position the power switch to “O (OFF)” before the work.

After the work, position the power switch to “I (ON)”, attach the front cover, and then turn on the power to the averaging converter at the external breaker.

Detectors can be additionally connected to the averaging converter by installing more channel cards. Follow the procedure below to add a channel card.

<Procedure>

1) Before the procedure, turn off the power to the averaging converter at the external breaker.
2) Remove the front cover, and position the power switch to “O (OFF)”.
3) Remove the channel slot cover from the desired channel by removing the screws holding the cover to the slot.
4) Slowly insert a channel card into the slot, sliding along the guide rail in the slot. Make sure that the connector on the back of the channel card is seated properly and firmly in the slot.
5) Securely tighten the screws on the channel card.
6) Connect the wiring from an additional detector to the terminals on the added channel card and to the corresponding heater terminals. Now the additional detector is connected to the averaging converter.
7) Turn on the power to the averaging converter. Check to ensure that on the display, the added channel becomes active and the temperature of the channel is rising.

NOTE

Up to 4 channel cards can be added in the 230 V AC version.

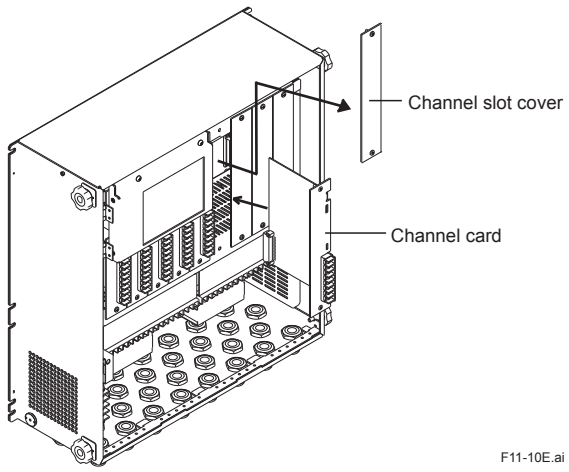

Figure 11.10 Adding Channel Cards

11.6 Adding the Expansion Power Supply Unit

WARNING

To work safely, turn off the power to the averaging converter at the external breaker and position the power switch to “O (OFF)” before the work.

After the work, position the power switch to “I (ON)”, attach the front cover, and then apply the power to the averaging converter.

To connect more than 4 detectors to a 4-channel base averaging converter (AV550G-A-), the expansion power supply unit is required to be installed as well as addition of channel card(s) described in Section 11.5, “Adding Channel Cards.”. Follow the procedure below to add the expansion power supply unit.

<Procedure>

1) Before the procedure, turn off the power to the averaging converter at the external breaker.
2) Remove the front cover, and position the power switch to “O (OFF)”.
3) The power cable to be connected to the expansion power supply unit is fixed inside the averaging converter with plastic bands (See Figure 11.11). Cut a plastic band nearest to the connector on the end of the power cable with a nipper or relevant tool. Take care not to damage the cable sheath.
4) Insert the connector of the power cable into the expansion power supply unit. Fix the expansion power supply unit to the frame of the averaging converter with the 4 screws supplied. Make sure that the connector in the rear of the expansion power supply unit is seated properly and firmly and the screws are securely tightened.
5) Connect the heater wiring of the added detector to the corresponding heater terminals, and attach the protection cover.

NOTE

The expansion power supply unit cannot be added in the 230 V AC version.

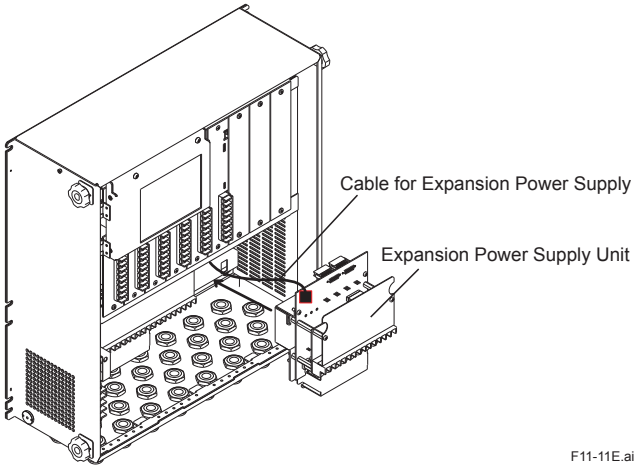

Figure 11.11 Adding the Expansion Power Supply Unit

11.7 Replacing Limited Life Components

The following components have limited life time. It is recommended that these components be replaced at an approximate interval of 5 years.

1) LCD panel
2) Switching power supply, 2 types (located on the left side of the frame, not visible from outside.)

For replacement of these components, contact our service office. When the control card or basic power supply unit breaks down, also contact our service office for repair.

12. Troubleshooting

This chapter describes errors and alarms detected by the self-diagnostics function of the averaging converter. It also explains inspections and remedies when other problems occur.

12.1 Displays and Remedies When Errors Occur

12.1.1 Error Types

An error occurs when an abnormality is detected in the detector or averaging converter, e.g., in the cell (sensor), detector heater, or internal circuits of the averaging converter.

An error (message and error contact) will not be canceled even after the cause of the error has been removed. Follow the procedure below to cancel an error.

An individual channel error can be canceled by using the hot swap function, i.e., by turning off/on the power to the channel where the error is occurring. A system error can be canceled by turning off/on the main power. There are five types of errors as shown in the table below.

Table 12.1 Error Types and Occurrence Conditions

Error Code	Error Type	Occurrence Conditions	Unit to be detected
Error 1	Cell voltage failure	Cell (sensor) voltage signal input to the converter falls below -50 mV for 1.5 seconds or longer continuously.	Each channel
Error 2	Heater temperature failure	1) Heater temperature rise during warm-up is not more than 5°C per 5 minutes. 2) Heater temperature during warm-up exceeds 780°C for 1.5 seconds or longer continuously. 3) After warm-up, heater temperature falls below 730°C or exceeds 780°C for 10 seconds or longer continuously.	Each channel
Error 3	Channel card failure	1) Failure is detected by memory check. 2) Communication failure occurs between card and A/D converter.	Each channel
Error 4	Control card failure	Failure is detected by memory check	System
Error 5	Inter-card communication failure	Communication failure occurs between control card and each channel.	Each channel

12.1.2 Operations When an Error Occurs

When an error occurs, the averaging converter operates as follows.

When a channel-specific error occurs:

1) The power to the heater of the corresponding detector is removed.
2) On the multi-channel display, a red error code is indicated under the relevant channel and an error icon flashes in the switch indication area (Figure 12.1).
3) On the single-channel display, a large error code is indicated in the oxygen concentration data area and an error icon flashes in the switch indication area if the display shows the relevant channel (Figure 12.2). If not, only a flashing error icon is indicated.
4) The relevant channel is dropped out of the averaging group. The averaging outputs continue with exception of the channel.
5) The corresponding individual analog output is put into the status specified in the [Output hold setup] display. No other individual analog outputs are affected.
6) The red lamp turns on in the status display lamp on the relevant channel.
7) The individual error contact and common error contact are activated.

When a system error occurs:

1) The power to the heaters of all detectors is removed.
2) The averaging outputs and all individual outputs are put into the status specified in the [Output hold setup] display.
3) An error icon flashes in the switch indication area.
4) The red lamps turn on in the status display lamps on all channels.
5) The individual error contacts for all channels and common error contact are activated.

12.1.3 Error Displays

By touching the error icon when an error occurs, detailed error descriptions can be displayed. Use the Next key to move to the next page if the error descriptions are displayed in multiple pages. On the detailed error description display, touch the Update key to update the error occurrence condition. When an error and an alarm occur at a time, an error icon takes precedence.

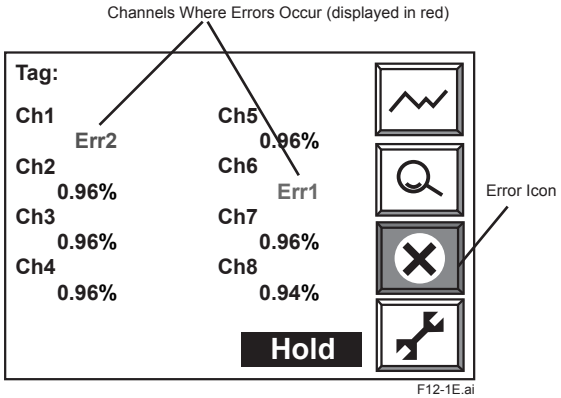

Figure 12.1 Error Displays on Multi-channel Display

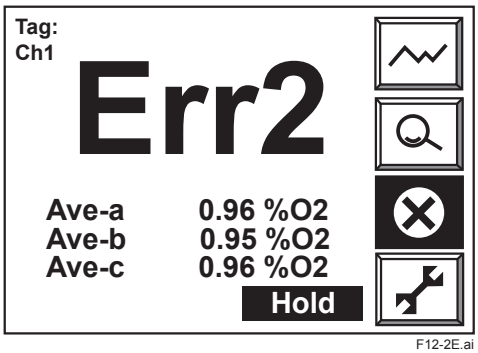

Figure 12.2 Error Displays on Single-channel Display

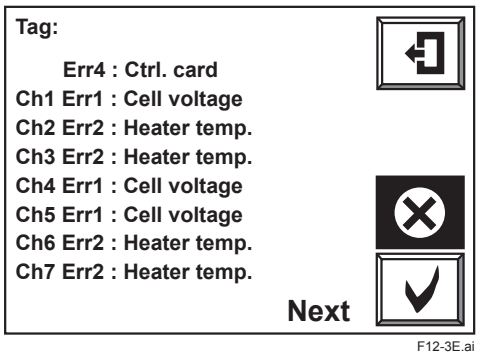

Figure 12.3 Error Descriptions (page 1)

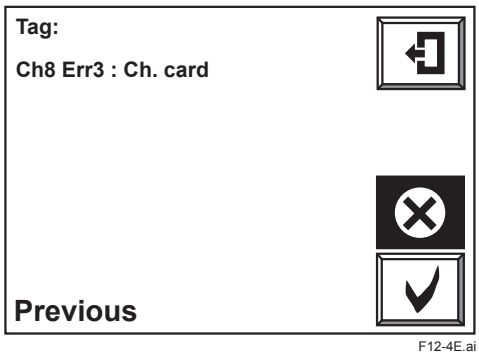

Figure 12.4 Error Descriptions (page 2)

12.1.4 Remedies When an Error Occurs

1) Error 1: Cell Voltage Failure

Error 1 occurs when the cell (sensor) voltage input to the converter falls below -50 mV (corresponding to about 200% O_2). The following are considered to be the causes for the cell voltage falling below -50 mV:

(1) Poor contact in terminal connections between the converter and detector

(2) Breakage in wiring cable between the converter and the detector

(3) Damage or deterioration of the sensor assembly

(4) Continuity failure between the sensor assembly electrode and the contact

(5) Wiring failure inside the detector

(6) Abnormality in electrical circuits in the converter

<Locating the failure and countermeasures>

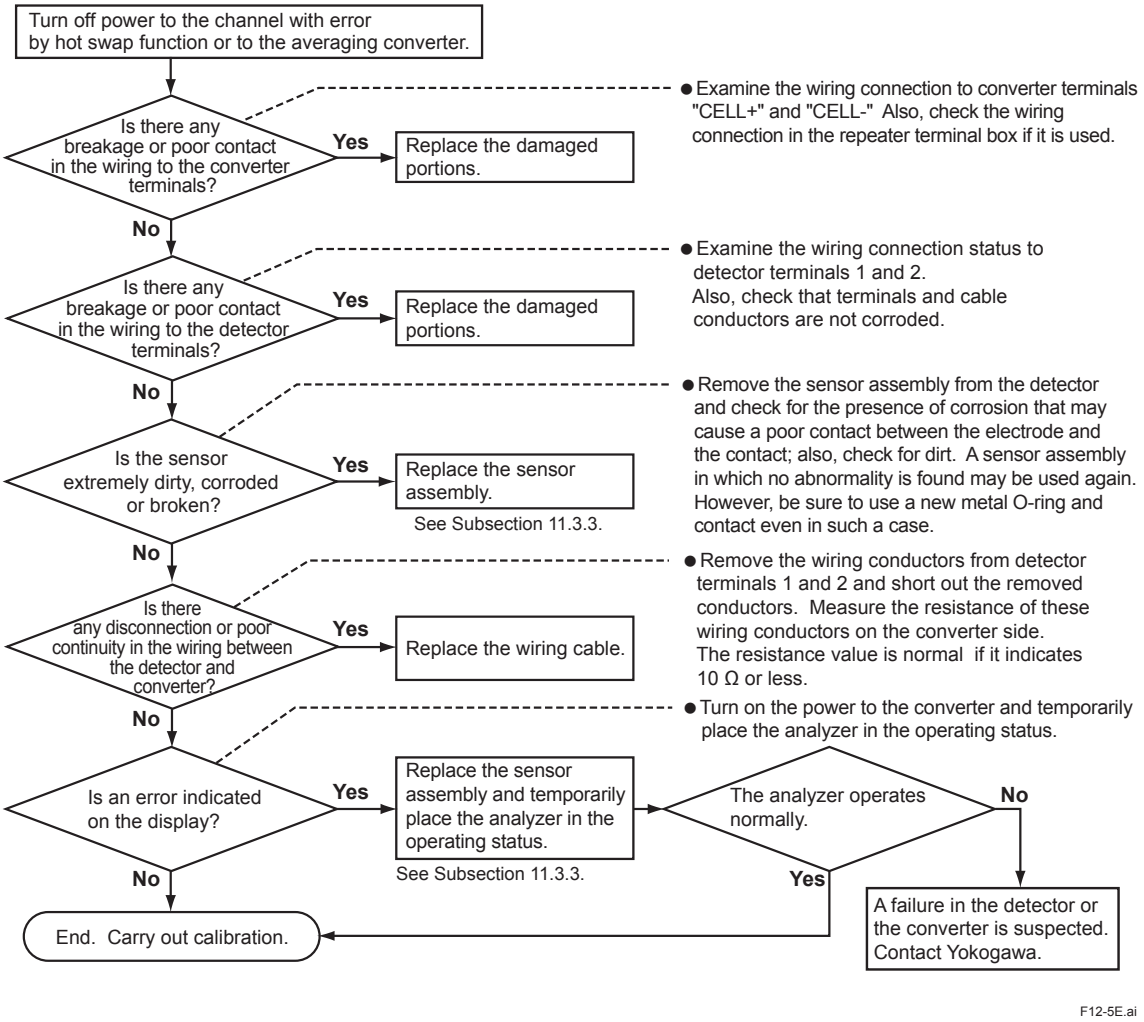

F12-5E.ai

Figure 12.5

2) Error 2: Heater Temperature Failure

<Possible causes of heater temperature failure>

This error occurs if the detector heater temperature does not rise during warm-up, falls below 730°C after warm-up, or exceeds 780°C. When Error 2 occurs, Alarm 5 (cold junction temperature alarm) may be generated at the same time. Be sure to touch the error icon to get the error description and confirm whether or not this alarm is being generated simultaneously.

If Alarm 5 is generated simultaneously, a failure in the cold junction system on the detector terminal block is suspected. In this case follow the procedure according to troubleshooting for Alarm 5 in Subsection 12.2.3.

The following are possible causes of Error 2 when it occurs independently.

1) Fuse for the heater on the power supply unit has blown.
2) Failure in wiring between the averaging converter and the detector (e.g., loose connection at terminals, wire breakage, short-circuit).
3) Faulty cold junction compensation sensor on the detector terminal block (loose connection at terminals).
4) Faulty thermocouple in the detector (wire breakage, short-circuit in internal wiring).
5) Faulty heater in the detector (wire breakage, etc.).
6) Failure in electrical circuits inside the averaging converter.

<Locating cause of failure, and Countermeasures>

1) Turn off power to the channel with error by how swap function or to the averaging converter.
2) Remove the cable from terminals 7 and 8 of the detector and measure the resistance between these terminals. The heater unit is normal if the resistance is lower than about 90 Ω. If the resistance value is higher, failure of the heater unit is suspected. In this case, replace the heater unit (refer to Subsection 11.3.4, “Replacement of the Heater Unit”). In addition, check that the two-way wiring resistance between the converter and the detector is 10 Ω or less.
3) Remove the wiring from terminals 3 and 4 of the detector and measure the resistance between these terminals. The thermocouple is considered normal if the resistance value is 5 Ω or less. If the value is higher than 5 Ω, it may indicate that the thermocouple wire has broken or is about to break. In this case, replace the heater unit (refer to Subsection 11.3.4). Also, check that the wiring resistance between the converter and the detector is 10 Ω or less.

NOTE

Measure the thermocouple resistance value after the temperature difference between the detector tip and the ambient atmosphere has decreased to 50°C or less. If the thermocouple voltage is large, accurate measurement cannot be achieved.

3) Error 3: Cannel Card Failure

This indicates that the channel card with an error has failed to operate properly. Replace the channel card. Before replacing the channel card, be sure to turn off power to the channel card to be replaced by hot swap function.

4) Error 4: Control Card Failure

This indicates that the control card has failed to operate properly. Contact our service office.

5) Error 5: Inter-card Communication Failure

If Error 5 occurs only on a certain channel, the channel card fails to operate properly. Noise or other factors are causing a temporary communication failure. Turn off and on power to the channel card by hot swap function. If the error message is cleared, the error was caused by a temporary communication failure; continue the operation. If the error message is not cleared, the error was caused by a malfunction of the channel card. Replace the channel card.

If Error 5 occurs in all channels, the control card is malfunctioning. Contact our service office.

12.2 Displays and Remedies When Alarms are Generated

12.2.1 Alarm Types

The following types of alarms may be generated by the averaging converter. If an alarm is generated, actions such as turning off the heater power are not carried out. The alarm is canceled when the cause of the alarm is removed.

Alarm 5 (cold junction temperature alarm) may be generated concurrently with Error 2 (heater temperature error). In this case, the operation when the error occurs has priority.

If the power to the averaging converter is turned off after an alarm is generated and the averaging converter is restarted before the cause of the alarm has been removed, the alarm will be generated again. Alarms 2, 3 and 4 (related to calibration) are not generated unless calibration is executed. An alarm will be automatically canceled after the cause of the alarm is removed.

Table 12.2 Alarm Types and Occurrence/Cancellation Conditions

Alarm Code	Alarm Type	Occurrence/Cancellation Conditions	Unit to be detected
Alarm 1	Oxygen concentration alarm	Measured oxygen concentration value exceeds or falls below the preset alarm limits. For details, see Section 8.2, “Setting Oxygen Concentration Alarms.”	Each channel
Alarm 2	Zero calibration coefficient alarm	In Auto or Semi-auto calibration, zero correction ratio is outside the range of 100 ± 30%. See Subsection 9.1.3, “Compensation.” To stop alarm: Recalibrate and stops if the ratio falls within the range.	Each channel
Alarm 3	Span calibration coefficient alarm	Span correction ratio is outside the range of 0 ± 18%. See Subsection 9.1.3, “Compensation” To stop alarm: Recalibrate and stops if the ratio falls within the range.	Each channel
Alarm 4	Calibration time over (EMF stabilization time-up) alarm	In Auto or Semi-auto calibration, cell voltage does not stabilize for 1 minute even after calibration time is up. Stabilization means that margin of cell voltage fluctuation is within ±0.1 mV and the state continues for about 1 second. To stop alarm: Recalibrate and stops if the stabilization time falls within the normal range.	Each channel
Alarm 5	Cold junction temperature alarm	Temperature of the cold junction placed in the detector terminal box falls below -25°C or exceeds 155°C. To stop alarm: The cold junction temperature becomes a normal value.	Each channel
Alarm 6	Process gas alarm	Averaging converter receives a signal of process gas alarm at contact input. To stop alarm: Contact input signal of process gas alarm is removed.	System
Alarm 7	Calibration gas pressure low alarm	Averaging converter receives a signal of calibration gas pressure low alarm at contact input. To stop alarm: Contact input signal of calibration gas pressure low alarm is removed.	System
Alarm 8	Asymmetry alarm	Calibration coefficient unstable. Alarm output if alarm enabled and conditions in Subsection 12.2.3, 7) are satisfied.	Each channel
Alarm 9	Inside temperature alarm	Internal temperature of the case exceeds limit. The limit is about 50°C in terms of case ambient temperature. Occurrence/cancellation time is recorded. To stop alarm: If the internal temperature falls below the limit.	System

12.2.2 Alarm Displays

By touching the alarm icon when an alarm is generated, detailed alarm descriptions can be displayed. Use the Next key to move to the next page if the alarm descriptions are displayed in multiple pages. On the detailed alarm description display, touch the Update key to update the alarm occurrence condition. When an error and an alarm occur at a time, an error icon takes precedence.

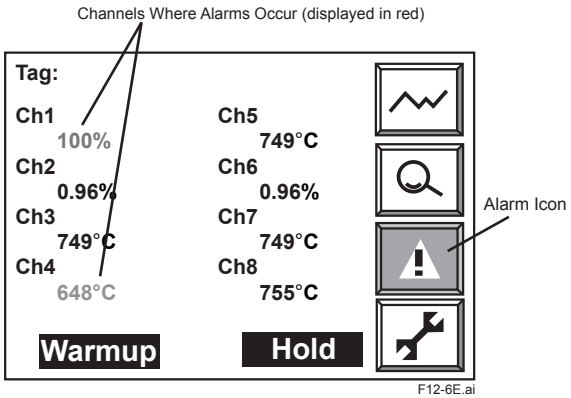

Figure 12.6 Alarm Displays on Multi-channel Display

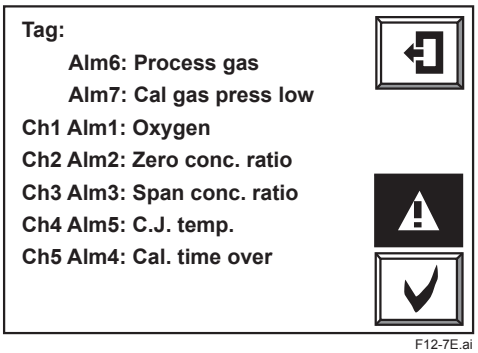

Figure 12.7 Alarm Descriptions

12.2.3 Remedies when Alarms are Generated

1) Alarm 1: Oxygen concentration alarm

See Section 8.2, “Setting Oxygen Concentration Alarms.”.

2) Alarm 2: Zero calibration coefficient alarm

In automatic or semi-automatic calibration, Alarm 2 is generated when the zero correction ratio is out of the range of 100 ± 30% (refer to Subsection 9.1.3, “Compensation”).
The following are possible causes of this alarm.

1) The zero-gas oxygen concentration does not agree with the value of the zero-gas concentration set in “Calibration setup”. Otherwise, the span gas is used as the zero gas.
2) The flow rate of the zero gas is out of the specified range (600 ± 60 ml/min).
3) The sensor assembly is damaged and so cell voltage is not normal.

<Locating cause of failure, and countermeasures>

1) Check that the following have been set up correctly. If not, correct them. Then, recalibrate the channel.

   * Check the preset zero gas concentration on the [Calibration setup] display. The displayed concentration value has agreed with the concentration of the zero gas actually used.
   * The piping for calibration gases has been constructed so that the zero gas does not leak.

2) If the alarm is not generated during the recalibration, improper calibration conditions are considered as the cause of the alarm generated in the previous calibration. In this case, no particular restoration is necessary.

3) If the alarm is generated again during the recalibration, deterioration of or damage to the sensor assembly is considered as the cause of the alarm. It is necessary to replace the cell with a new one. Before replacement, carry out the following.

Check the cell voltages when the zero gas and span gas are introduced.

When the system is configured for automatic calibration, let the calibration gas flow from the [Indication check] display and measure the voltage between terminals CELL+ and CELL- on the channel card using a tester or relevant equipment. The measured voltage is the cell voltage. How to perform the indication check, refer to Section 10.4, “Indication Check.”.

When the valves for the calibration gas can be manually operated, the cell voltage can be checked on the display of the averaging converter. The procedure is as follows.

a. From the basic panel display, move to the [Detailed data] display of the channel where the alarm is being generated.

b. The cell voltage should be indicated on the top line. (Figure 12.8)

c. Check whether or not the displayed cell voltage is very different from the theoretical value at the oxygen concentration of the relevant gas. See Table 12.3 for the theoretical cell voltages. Although the tolerance to the theoretical value cannot be generally specified, a reasonable one may be approximately ±10 mV.

Table 12.3 Oxygen Concentration and Cell Voltage

Oxygen Conc. (%O_2)	Cell Voltage (mV)
1%	67.1
21%	0

4) Check whether the deterioration of or damage to the sensor assembly that caused the alarm, has occurred suddenly during the current calibration by following the procedure below.

a. Call up the [Detailed data] display.

b. Use the ▼ key to check Calibration data (Figure 12.9). The span and zero correction ratios of the last ten calibration can be checked here. By checking these data, whether the sensor deterioration has occurred suddenly or gradually can be determined.

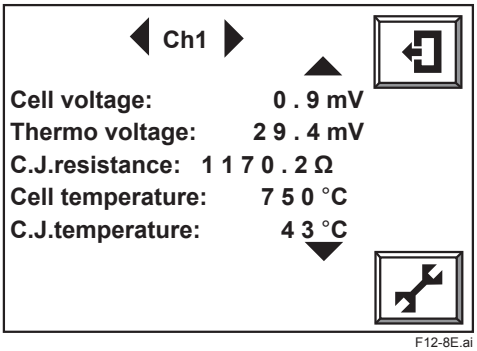

Figure 12.8 Detailed Data Display

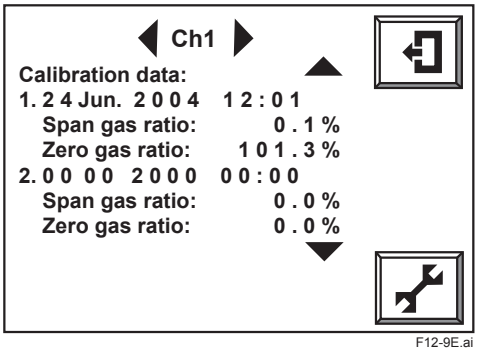

Figure 12.9 Calibration History

5) If the sensor assembly has deteriorated suddenly, the check valve that prevents moisture in the furnace from entering into the calibration pipes may have malfunctioned. If the furnace gas flows into calibration lines, the gas is cooled and thus condensation develops and accumulates in the pipe. During calibration the condensate is carried with the calibration gas and blow onto the sensor assembly, whereby the cell is cooled quickly. This results in the failed sensor assembly.

6) If the sensor assembly has deteriorated gradually, check the condition of the sensor assembly following the procedure below.

a. Use the ▼ key to check Cell resistance. It should be 200 Ω or less if the cell (sensor) is new. On the other hand, if the cell (sensor) is approaching the end of its service life, it will be 3 to 10 kΩ.

b. Use the ▼ key to check Cell robustness. It should say “life > 1 year” if the cell (sensor) is in good condition.

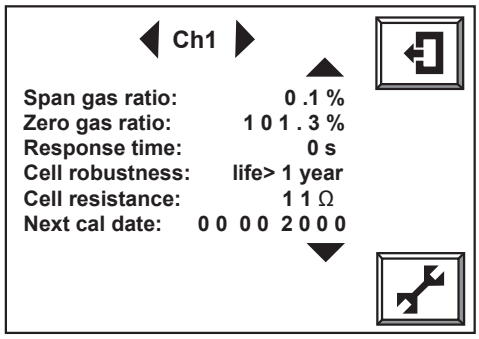

Figure 12.10 Detailed Data Display (Cell Robustness)

3) Alarm 3: Span calibration coefficient alarm

In automatic or semi-automatic calibration, this alarm is generated when the span correction ratio is out of the range of 0 ± 18% (refer to Subsection 9.1.3, “Compensation”). The following are suspected as the cause:

(1) The oxygen concentration of the span gas does not agree with the value of the span gas set “Calibration setup.”

(2) The flow of the span gas is out of the specified flow value (600 ± 60 ml/min).

(3) The sensor assembly is damaged and the cell voltage is abnormal.

<Locating cause of failure, and countermeasures>

(1) Confirm the following and carry out calibration again: If the items are not within their proper states, correct them.
   a. If the display “Span gas conc.” is selected in “Calibration setup,” the set point should agree with the concentration of span gas actually used.
   b. The calibration gas tubing should be constructed so that the span gas does not leak.

(2) If no alarm is generated as a result of carrying out recalibration, it is suspected that improper calibration conditions were the cause of the alarm in the preceding calibration. In this case, no specific restoration is necessary.

(3) If an alarm is generated again as a result of carrying out recalibration, deterioration of or damage to the cell (sensor) is suspected as the cause of the alarm. Replacement of the cell with a new one is necessary. However, before replacement, carry out the procedure described in step (3) of <Locating cause of failure, and counter measures> in Subsection 12.2.3, 2) “Alarm 2: Zero calibration coefficient alarm.”

4) Alarm 4: Calibration time over (EMF stabilization time-up) alarm

This alarm is generated if the sensor (cell) voltage has not stabilized even after the calibration time is up for the reason that the calibration gas (zero gas or span gas) has not filled the sensor assembly of the detector. The following are suspected as the cause:

(1) The flow of the calibration gas is less than normal (a specified flow of 600 ± 60 ml/min).

(2) The length or thickness of the calibration gas tubing has been changed (lengthened or thickened).

(3) The measuring gas flows toward the tip of the probe.

(4) The sensor (cell) response has deteriorated.

<Locating cause of failure, and countermeasures>

(1) Carry out calibration by passing the calibration gas at the specified flow (600 ± 60 ml/min) after checking that there is no leakage in the tubing.

(2) If calibration is carried out normally, perform a steady operation without changing the conditions. If the alarm occurs again, check whether or not the reason is applicable to the following and then replace the sensor assembly.

- A lot of dust and the like may be sticking to the tip of the detector probe. If dust is found, clean the probe (see Subsection 11.3.1). In addition, if an alarm occurs in calibration even after the sensor assembly is replaced, the influence of sample gas flow may be suspected. Do not let the sample gas flow toward the tip of the detector probe, for example, by changing the mounting position of the detector.

5) Alarm 5: Cold junction temperature alarm

This alarm is generated when the temperature of the cold junction located at the terminal block of the detector falls below -25°C or exceeds 155°C. Check the following:

Display “C.J.Temperature” in the [Detailed data] display. If “C.J.Temperature” is indicated as 200°C or -50°C, the following can be considered.

(1) Breakage of the cold junction signal wires between the converter and the detector, or the cable is not securely connected to the connecting terminals.

(2) The positive and negative poles of the cold junction signal wiring are shorted out in the wiring extension or at the connection terminals.

(3) A failure of the cold junction temperature sensor located at the detector terminal block occurred.

(4) A failure of the electrical circuits inside the converter occurred.

<Locating cause of failure, and countermeasures>

Before proceeding to the following troubleshooting procedure, examine whether or not the temperature of the detector terminal block is out of the operating temperature range.
The operating temperature range varies with the type of detector. If the detector terminal block is out of its operating temperature range, take the measure to lower the temperature, such as situating it so that it is not subjected to radiant heat.

The case where the Model ZR22 Detector is used:

(1) Stop the power to the converter.

(2) Remove the wiring from terminals 5 and 6 of the detector and measure the resistance between these terminals. If the resistance value is out of the range of 1 to 1.6 kΩ, the cold junction temperature sensor is considered to be faulty. Replace that temperature sensor with a new one.

(3) If the resistance value is within the above range, the cold junction temperature sensor seems to be normal. Check whether or not the cable is broken or shorted out, and whether the cable is securely connected to the terminals. Also, check that the resistance of the wiring between the converter and detector is 10 Ω or less.

(4) If there is no failure in the wiring, the electrical circuits inside the converter may possibly fail. Contact the service personnel at Yokogawa Electric Corporation.

The case where the Model ZO21D Detector is used:

(1) Without stopping the power to the converter, remove the wiring from terminals 5 and 6 of the detector and measure the voltage between these terminals. If the voltage between the terminals is out of the range of 0.4 to 0.7 V, the cold junction temperature sensor seems to be faulty. Replace the cold junction temperature sensor.

(2) If the voltage between the terminals is within the above range, the cold junction temperature sensor seems to be normal. Check whether or not the cable is broken or shorted out, and whether the cable is securely connected to the terminals. Also, check that the resistance of the wiring between the converter and detector is 10 Ω or less.

(3) If there is no failure in the wiring, the electrical circuits inside the converter may possibly fail. Contact the service personnel at Yokogawa Electric Corporation.

CAUTION

The operating temperature range of the ZO21D detector is -10°C to 80°C (except for the high temperature detector ZO21D-H). Since a cold junction temperature alarm for this analyzer is not generated until the temperature exceeds 155°C, if the ZO21D is used, be careful in controlling the ambient temperature of the terminal block.

6) Alarm 6: Process gas alarm

When process gas alarm is assigned to a contact input, the power to the detector heater is turned off for safety during continuous input of the contact signal. The power to the heater will be turned on again after the contact input is removed, and then warm-up will start. After the warm-up the averaging converter will go in measurement mode automatically.

7) Alarm 7: Calibration gas pressure low alarm

When calibration gas pressure low is assigned to a contact input, calibration and indication check are not performed during the input of the contact signal. If the averaging converter receives this contact input during the calibration or indication check process, it will abort the ongoing calibration or indication check, After the contact input is removed, subsequent calibrations and indication checks will be enabled.

8) Alarm 8: Asymmetry alarm

NOTE

This function, alone, is not sufficient to ensure the accuracy and reliability of this instrument. Read the following thoroughly, and use it as just one of several troubleshooting tools. Note that shipping-time default is for this function to be disabled.

(1) Cause

In general, sensor aging causes a change in the slope of the compensation line. If calibration is performed when the detector tip is clogged with dust from the sample gas, however, this can cause a shift in both zero and span calibration results. Such an offset can be compensated for by zero shift alone. This alarm occurs if, when the last two calibration results are compared, the shift indicates such a tip-clogging pressure-related effect.

Example: When the second calibration result is compared with the first, the change in slope indicates sensor degradation.
However, when the third calibration result is compared with the second, the slope has not changed, only the zero offset, suggesting clogging and pressure effects.

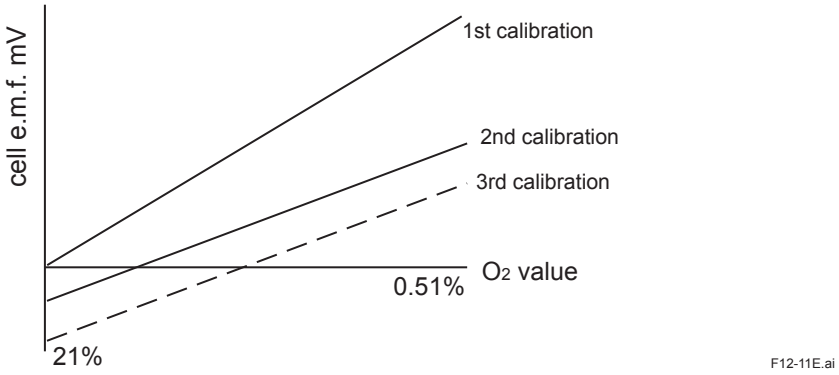

Figure 12.11 Cause of Alarm

(2) Conditions for generating an alarm

When the current result and the two previous results -- for the oxygen concentration resulting in a given cell e.m.f. -- are compared, if both of the following conditions are satisfied then an alarm is issued:

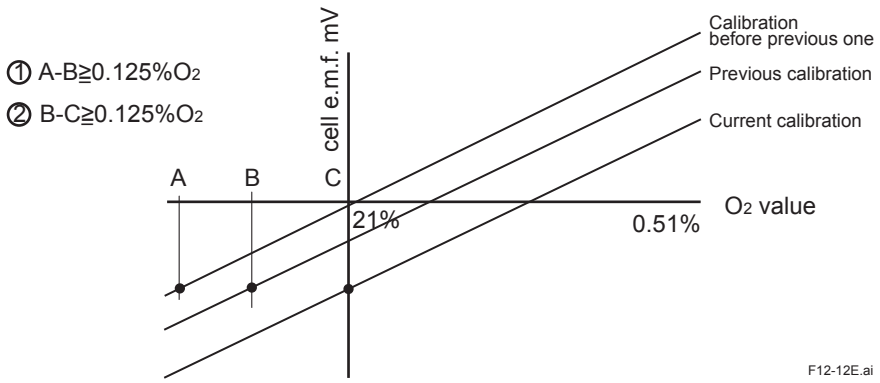

Figure 12.12 Conditions for Alarm

A repeatability of 0.125% O_2 on the 0 to 25% range is determined from the specified precision. (25% O_2 x 0.5% = 0.125% O_2)

However, the following restrictions apply:

(a) When either span or zero calibration is performed, not both, the results are ignored in applying the above criteria.

(b) If calibrations are separated by an interval of less than 5 days, then the results are ignored in applying the above criteria.

(3) Conditions for releasing alarm status

(a) If calibration results show improvement compared with previous results e.g. higher cell e.m.f., then it is assumed that clogging has been cleaned away, or the cell replaced. Alarm status and previous data are cleared (but calibration history is not cleared).

(b) If you clear the calibration history, then alarm status and past calibration data is also cleared.

(c) If you disable alarm functions, then alarm status is cleared (but calibration history is not cleared).

(4) What to do when an alarm occurs

It is possible that the detector tip filter is clogged. Refer to Chapter 11 Inspection and Maintenance (on Maintenance for cleaning procedure).

(5) Alarm setting

(a) On the basic panel display, touch the Setup key to display the [Execution / Setup] display.

(b) Select [Setup] to display the Setup screen.

(c) Select [Other] the [Asymmetry alarm]. The screen below is displayed.

(d) From the [Enable/Disable] window, select [Enable] and touch the Enter key.

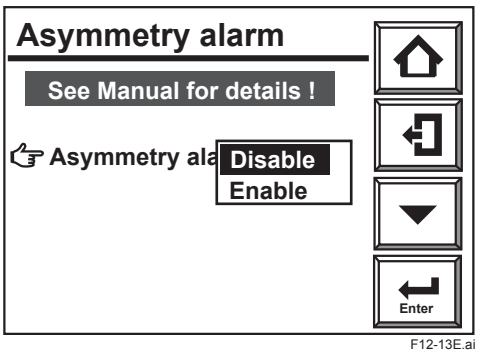

Figure 12.13 Asymmetry Alarm Screen

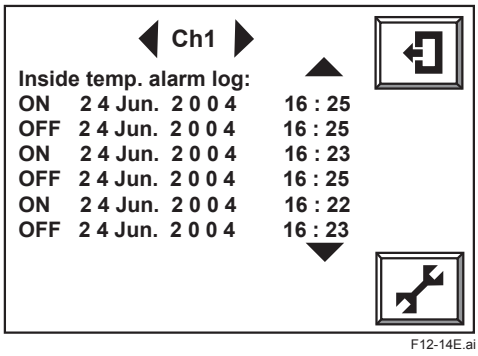

Figure 12.14 Inside Temperature Alarm Log

NOTE

For these alarm functions to be effective, first enable them, then calibrate three times at intervals of at least 5 days. After that the function will be effective.

9) Alarm 9: Inside temperature alarm

Using the averaging converter in the ambient temperature of more than 50°C may cause a failure in internal electronic circuit. An IC temperature sensor is installed inside the control card of the averaging converter and monitors the internal temperature constantly.
If the internal temperature exceeds the limit, an inside temperature alarm will be generated. The limit is approximately 50°C in terms of case ambient temperature. The occurrence/cancellation time of this alarm is recorded for the last three times. The record can be viewed in the [Detailed data] display (Figure 12.14). For frequent occurrence of this alarm, take a measure to lower the ambient temperature. By assigning the inside temperature alarm to the contact output, a contact may be used as an ON/OFF switch for cooling equipment (e.g., fan).

12.3 Countermeasures When Measured Value Shows Error

The causes that the measured value shows an abnormal value is not always due to instrument failures. There are rather many cases where the causes are those that measuring gas itself is in abnormal state or external causes exist, which disturb the instrument operation. In this section, causes of and measures against the cases where measured values show the following phenomena will be described.

(1) The measured value is higher than the true value.

(2) The measured value is lower than the true value.

(3) The measured value sometimes shows abnormal values.

12.3.1 Measured Value Higher Than True Value

<Causes and Countermeasures>

(1) The measuring gas pressure becomes higher.
The measured oxygen concentration value X (vol% O_2) is expressed as shown below, when the measuring gas pressure is higher than that in calibration by Δp (kPa).

$X=Y [1+ (\Delta p/101.30)]$

where Y: Measured oxygen concentration value at the same pressure as in calibration (vol% O_2).

Where an increment of the measured value by pressure change cannot be neglected, measures must be taken.
Investigate the following points to perform improvement available in each process.

- Is improvement in facility's aspect available so that pressure change does not occur?
- Is performing calibration available under the average measuring gas pressure (internal pressure of a furnace)?

(2) Moisture content in a reference gas changes (increases) greatly.
If air at the detector installation site is used for the reference gas, large change of moisture content in the air may cause an error in measured oxygen concentration value (vol% O_2). When this error is not ignored, use a gas in which moisture content is constant such as instrument air in almost dry condition as a reference gas.
In addition, change of moisture content in exhaust gas after combustion is also considered as a cause of error. However, normally this error is negligible.

(3) Calibration gas (span gas) is mixing into the detector due to leakage.
If the span gas is mixed into the detector due to leakage as a result of failure of the valve provided in the calibration gas tubing system, the measured value shows a value a little higher than normal.
Check valves (needle valves, check valves, solenoid valves for automatic calibration, etc.) in the calibration gas tubing system for leakage. For manual valves, check them after confirming that they are in fully closed states. In addition, check the tubing joints for leakage.

(4) The reference gas is mixing into the measuring gas and vice versa.
Since the difference between oxygen partial pressures on the sensor anode and cathode sides becomes smaller, the measured value shows a higher value.
An error which does not appear as the Error 1 may occur in the sensor. Sample gas and/or the reference gas may be leaking. Visually inspect the sensor. If any crack is found, replace the sensor assembly with a new one.

NOTE

Data such as cell robustness displayed in the [Detailed data] display should also be used for deciding sensor quality as references.

12.3.2 Measured Value Lower Than True Value

<Causes and Countermeasures>

(1) The measuring gas pressure becomes lower.
Where an increment of the measured value due to pressure change cannot be neglected, take measures referring to Subsection 12.3.1 (1).

(2) Moisture content in a reference gas changes (decreases) greatly.
If air at the detector installation site is used for the reference gas, large change of moisture content in the air may cause an error in measured oxygen concentration value (vol% O_2).
When this error is not ignored, use a gas in which moisture content is constant such as instrument air in almost dry condition as a reference gas.
In addition, change of moisture content in exhaust gas after combustion is also considered as a cause of error. However, normally this error is negligible.

(3) Calibration gas (zero gas) is mixed into the detector due to leakage.
If the zero gas is mixed into the detector due to leakage as a result of failure of the valve provided in the calibration gas tubing system, the measured value shows a value a little lower than normal.
Check valves (needle valves, check valves, solenoid valves for automatic calibration, etc.) in the calibration gas tubing system for leakage. For manual valves, check them after confirming that they are in fully closed states.

(4) Combustible components exist in the sample gas.
If combustible components exist in the sample gas, they burn in the sensor and thus oxygen concentration decreases.
Check that there are no combustible components.

(5) Temperature of the detector cell reaches 750°C or more.

12.3.3 Measurements Sometimes Show Abnormal Values

<Causes and Countermeasures>

(1) Noise may be mixing in with the converter from the detector output wiring.
Check whether the converter and detector are securely grounded. Check whether or not the signal wiring is laid along other power cords.

(2) The converter may be affected by noise from the power supply.
Check whether or not the converter power is supplied from the same outlet, switch, or breaker as other power machines and equipment.

(3) Poor wiring contact.
If there is poor contact in the wiring, the sensor voltage or thermocouple e.m.f. (voltage) may vary due to vibration or other factors. Check whether or not there are loose points in the wiring connections or loose crimping (caulking) at the crimp-on terminal lugs.

(4) Combustible components in the sample gas may be getting into the sensor.
If the combustible components show signs of dust, the abnormality may be improved by mounting a dust filter K9471UA.

(5) There may be a crack in the sensor or leakage at the sensor-mounting portion.
If the indication of concentration varies in synchronization with the pressure change in the furnace, check whether or not there is a crack in the sensor or whether the sensor flange is sticking tightly to the probe-attaching face with the metal O-ring squeezed.

(6) There may be leakage in the calibration gas tubing.
In the case of a negative furnace inner pressure, if the indication of concentration varies with the pressure change in the furnace, check whether or not there is leakage in the calibration gas tubing.

Customer Maintenance Parts List

Model AV550G
Averaging Converter

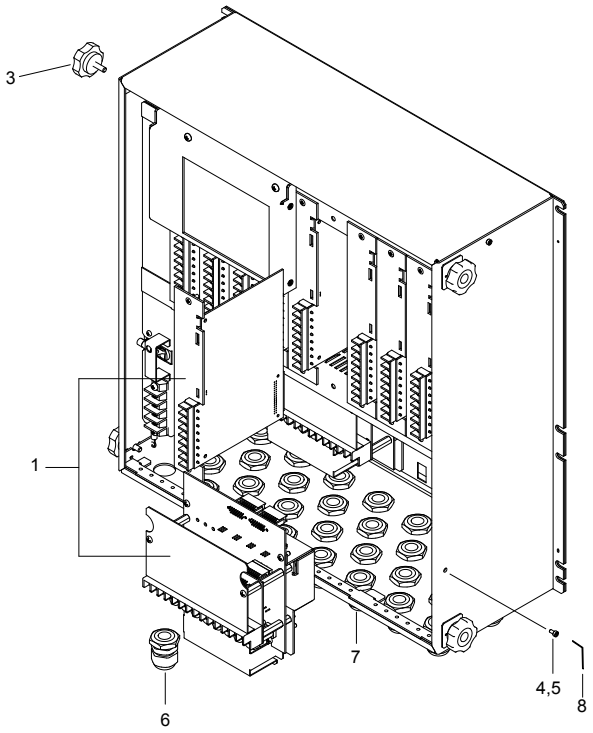

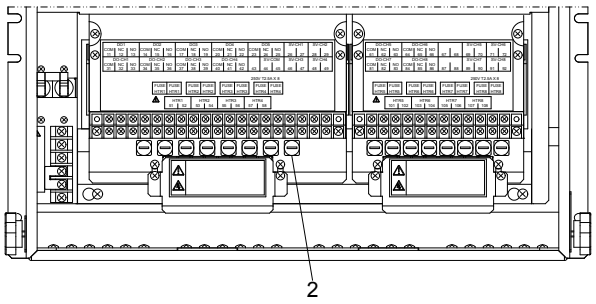

Item	Part No. or MS code	Qty	Description
1	AV55CM-□□-□/□	—	Channel Card (Refer to MS code)
2	A1112EF	Max.16	Fuse
3	K9475YA	4	Knob Bolt
4	Y9410ZU	1	Lock Screw
5	L9801BF	1	Washer
6	K9471UF	—	Cable Gland
7	G7276YE	—	Grommet
8	L9827AS	1	Allen Wrench for Lock Screw

YOKOGAWA
Yokogawa Electric Corporation

All Rights Reserved, Copyright © 2004, Yokogawa Electric Corporation.
Subject to change without notice.

CMPL 11M12D01-01E
1st Edition : July. 2004 (YK)
2nd Edition : Sep. 2011 (YK)

Customer Maintenance Parts List

Model ZR22G
Zirconia Oxygen/Humidity Analyzer, Detector
(Separate type)

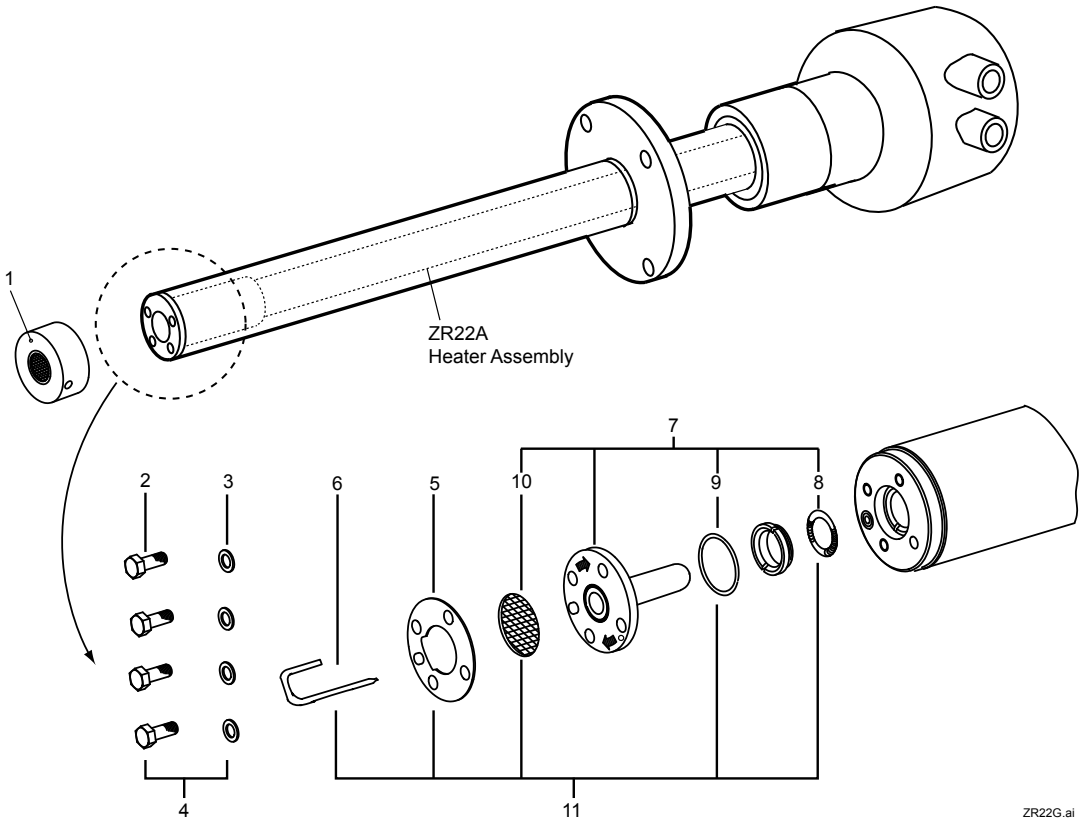

Item	Part No.	Qty	Description
1	K9471UA	1	Dust Filter (Option)
2	---	4	Bolt
	G7109YC		(M5x12, SUS316 stainless steel)
	K9470BK		(M5x12, inconel) for Option code "/C"
3	E7042DW	4	Washer (SUS316 stainless steel)
4	---	1	Bolts and Washers
	K9470ZF		G7109YC x 4 + E7042DW x 4
	K9470ZG		K9470BK x 4 + E7042DW x 4 for Option code "/C"
5	E7042BR	1	Plate
6	K9470BM	1	Pipe
	K9473AN	1	Pipe for Option code "/C"
7	---	1	Cell Assembly
	ZR01A01-01		1 piece (E7042UD)
	ZR01A01-02		2 pieces
	ZR01A01-05		5 pieces
	ZR01A01-10		10 pieces
8	E7042BS	1	Contact
9	K9470BJ	1	Metal O-ring
10	E7042AY	1	Filter
11	---	1	Calibration Tube Assembly
	K9470ZK		Cal. Gas Tube Assembly
	K9470ZL		Cal. Gas Tube Assembly for Option code "/C"

YOKOGAWA
Yokogawa Electric Corporation

All Rights Reserved, Copyright © 2000, Yokogawa Electric Corporation.
Subject to change without notice.

CMPL 11M12A01-02E
1st Edition : Aug. 2000 (YK)
9th Edition : Feb. 2016 (YK)

Customer Maintenance Parts List

EXA OXY

Model ZO21DW-L
Zirconia Oxygen Analyzer Detector
(with Flameproof Terminal Box)

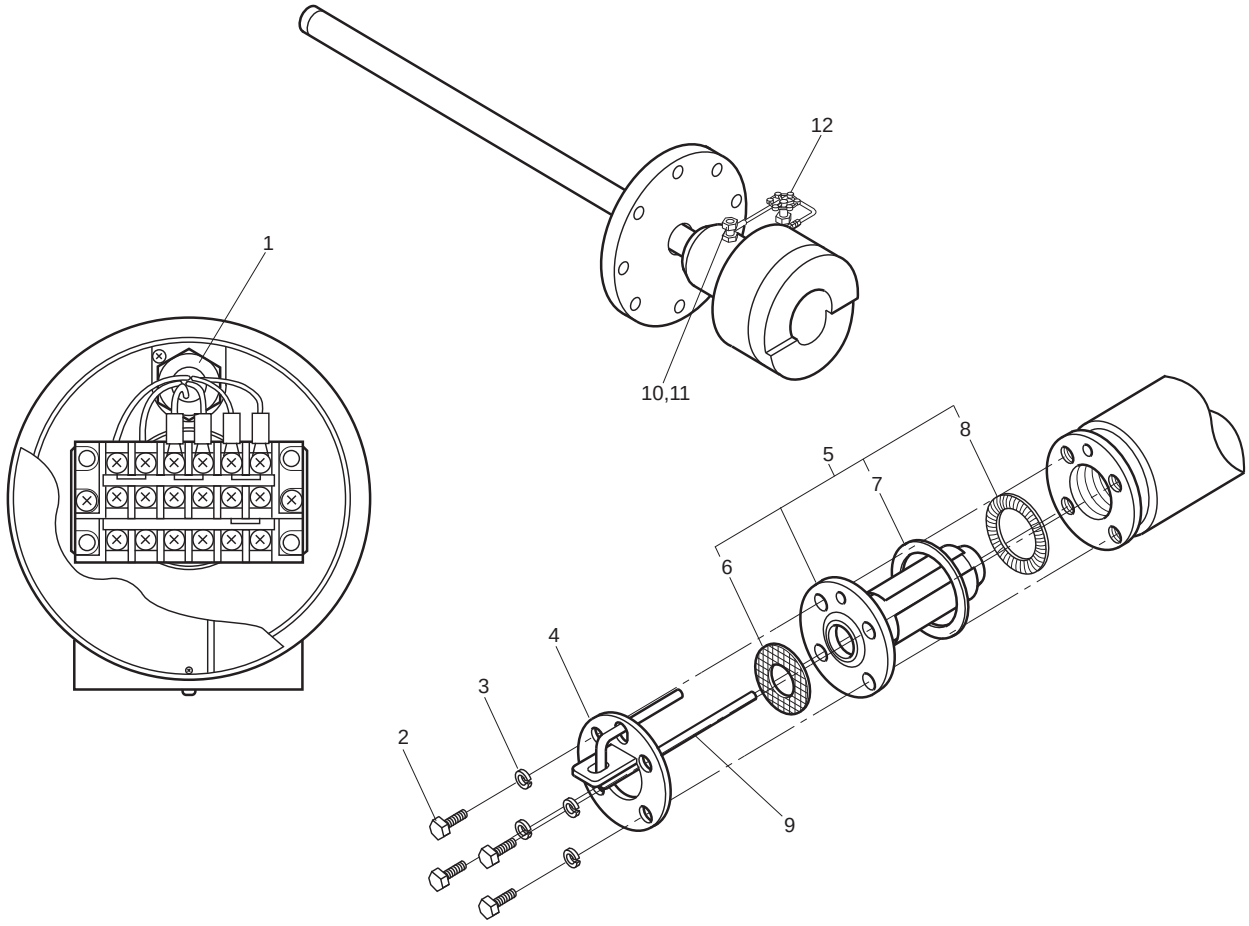

Item	Part No.	Qty	Description
1	E7097BN	1	Cold Junction Assembly
2	G7109YC	4	Bolt (M5x12, SUS304 Stainless steel)
3	E7042DW	4	Washer
4	E7042BR	1	Plate
5	E7042UD	1	Cell Assembly
6	E7042AY	1	Filter
7	K9470BJ	1	Metal O-Ring
8	E7042BS	1	Contact
9	E7042BQ	1	Pipe
10	G7011XH	1	Stop Valve (for ZO21DW-L ...-J, -E/SV)
	G7013XH	1	Stop Valve (for ZO21DW-L ...-A/SV)
	E7042VR	1	Check Valve (for ZO21DW-L ...-J, -E/CV)
	E7042VV	1	Check Valve (for ZO21DW-L ...-A/CV)
11	G7067XA	1	Nipple (for ZO21DW-L ...-J, -E/SV)
	G7248XA	1	Nipple (for ZO21DW-L ...-A/SV)
12	G7007XH	1	Needle Valve

YOKOGAWA
Yokogawa Electric Corporation

All Rights Reserved, Copyright © 1989, Yokogawa Electric Corporation.
Subject to change without notice.

CMPL 11M06B02-01E
1st Edition : Apr. 1989 (YK)
7th Edition : Apr. 2013 (YK)

Customer Maintenance Parts List

Model ZO21P-H
Zirconia Oxygen Analyzer
High Temperature Probe Adaptor

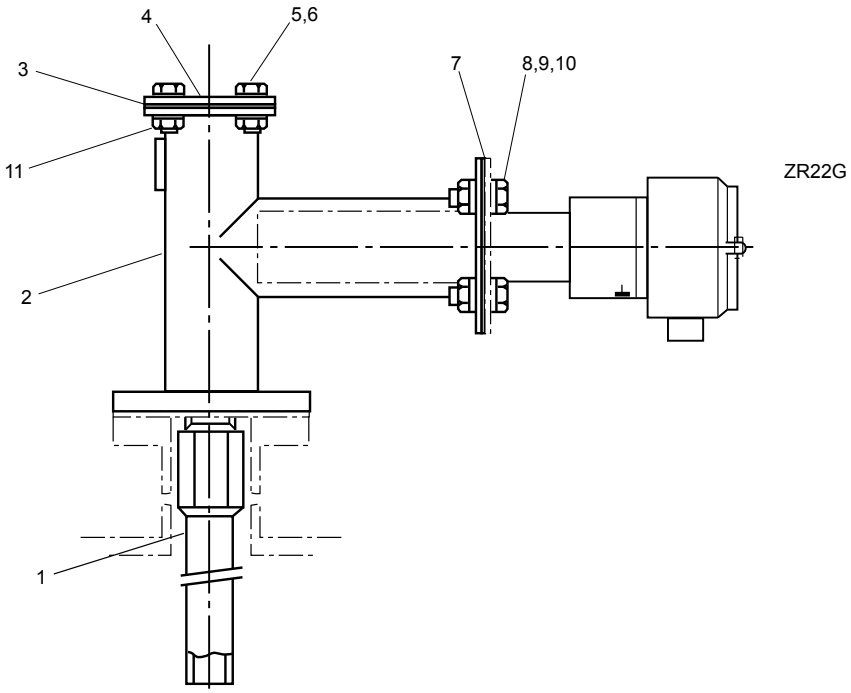

Item	Part No.	Qty	Description
1	K9292TP	1	Probe (SiC, L=0.5m)
	E7046CF	1	Probe (SiC, L=0.6m)
	K9292TQ	1	Probe (SiC, L=0.7m)
	E7046CG	1	Probe (SiC, L=0.8m)
	E7046CH	1	Probe (SiC, L=0.9m)
	E7046AL	1	Probe (SiC, L=1.0m)
	E7046BB	1	Probe (SiC, L=1.5m)
	K9292TV	1	Probe (SUS, L=0.5m)
	E7046CR	1	Probe (SUS, L=0.6m)
	K9292TW	1	Probe (SUS, L=0.7m)
	E7046CS	1	Probe (SUS, L=0.8m
	E7046CT	1	Probe (SUS, L=0.9m
	E7046AP	1	Probe (SUS, L=1.0m
	E7046AQ	1	Probe (SUS, L=1.5m

Item	Part No.	Qty	Description
2	E7046FA	1	Probe Adaptor (for JIS 5K-50-FF)
	E7046FE	1	Probe Adaptor (for ANSI CLASS150-4-RF)
	E7046FK	1	Probe Adaptor (for DIN PN10-DN50-A)
	E7046FD	1	Probe Adaptor (for JIS 10K-100-FF)
	E7046FC	1	Probe Adaptor (for JIS 10K-80-FF)
	E7046FB	1	Probe Adaptor (for JIS 10K-65-FF)
	E7046FG	1	Probe Adaptor (for ANSI CLASS150-3-RF)
	E7046FF	1	Probe Adaptor (for ANSI CLASS150-2 1/2-RF)
	E7046FJ	1	Probe Adaptor (for JPI CLASS150-4-RF)
	E7046FH	1	Probe Adaptor (for JPI CLASS150-3-RF)
3	E7046FQ	1	Gasket
4	E7046FN	1	Plate
5	Y9825NU	4	Bolt
6	Y9800WU	8	Washer
7	G7073XL	1	Gasket
8	Y9630RU	4	Bolt
9	Y9121BU	4	Nut
10	Y9120WU	4	Washer
11	Y9801BU	4	Nut

YOKOGAWA
Yokogawa Electric Corporation

All Rights Reserved, Copyright © 2000, Yokogawa Electric Corporation.
Subject to change without notice.

CMPL 11M03B01-10E
1st Edition : Dec. 2000 (YK)
8th Edition : Sep. 2012 (YK)

Customer Maintenance Parts List

E7046EC/E7046EN
Zirconia Oxygen Analyzer
Auxiliary Ejector Assembly (for Model ZO21P-H)

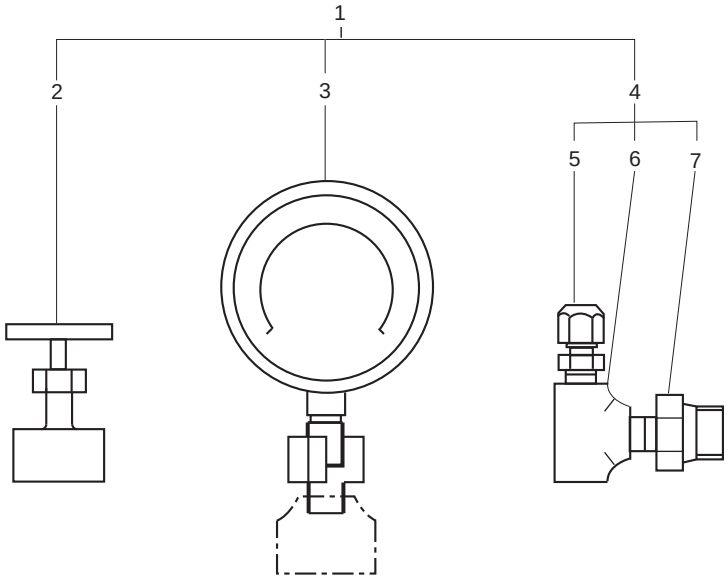

Item	Part No.	Qty	Description
1	E7046EC	1	Auxiliary Ejector Assembly, Connection Rc1/4
	E7046EN	1	Auxiliary Ejector Assembly, Connection 1/4 NPT
2	L9852CB	1	Needle Valve, Connection Rc1/4
	G7016XH	1	Needle Valve, Connection 1/4NPT
3	E7046EK	1	Pressure Gauge, Connection Rc1/4
	E7046EV	1	Pressure Gauge, Connection 1/4NPT
4	E7046ED	1	Ejector, Connection Rc1/4
	E7046EP	1	Ejector, Connection 1/4NPT
5	E7046EF	1	Nozzle Assembly, Tube Connection Ø6xØ4 tube
	E7046ER	1	Nozzle Assembly, Tube Connection 1/4 inch tube
6	G7031XA	1	Tee, Connection Rc1/4
7	E7046EJ	1	Reducing nipple, Connection R1/4

YOKOGAWA
Yokogawa Electric Corporation

All Rights Reserved, Copyright © 2000, Yokogawa Electric Corporation.
Subject to change without notice.

CMPL 11M03B01-05E
1st Edition : Dec. 2000 (YK)
8th Edition : Mar. 2013 (YK)

Revision Information

- Title : Model AV550G Zirconia Oxygen Analyzer Averaging Converter
- Manual No. : IM 11M12D01-01E

Sep. 2023/10th Edition
Revised conformity standards. (page 2-12)

June 2021/9th Edition
Revised RoHS conformity standards. (page 2-12)
Corrected (pages v, 2-11)

Nov. 2019/8th Edition
Revised due to the change of power supply (pages 5-3, 5-6)
Deleted FOUNDATION Fieldbus communication (pages i, ii, 2-11, 2-14, 2-15, 5-3, 6-3)

May 2017/7th Edition
Addition RoHS etc. (pages ii, v, 2-12)

Feb. 2016/6th Edition
Addition the related documents, etc.
CMPL 11M12A01-02E: Upgrade

Aug. 2015/5th Edition
Section 2.4.1, “Standard Specifications”: Added to “Safety and EMC conforming standards”

Apr. 2013/4th Edition
Revised and Corrected over all

Sep. 2005/3rd Edition
Revised Section
Introduction: Added description.
◆ For the safe use of this equipment: Added description in DANGER.
◆ After-Sales Warranty: Added description regarding modification.
Section 1.1.1, Figure 1.1, Typical System Configuration Using Flow Setting Units for manual calibration: Added 230 V AC power supply
Section 1.2.1, “System Components and Their Applicability”: Change part numbers.
Section 2.4.1, “Standard Specification”: Added 230 V AC power supply, 195.5 to 253 V, and FOUNDATION Fieldbus communication function.
Section 2.4.2, Model and Codes: Revised.
Section 2.6.6, “Air Set”: Changed part numbers and drawings.
Section 2.6.8, “Cylinder Regulator Valve (Part No. G7013XF or G7014XF)”: Changed drawings.
Section 3.3.1, “Installation Location”: Added in Danger and Caution
Section 5.1.3, Figure 5.3, External Wiring Connection Terminals of the Averaging Converter: Changed.
Section 10.3.2, “Selecting Language”: Added display language options, German and French.
Section 11.5, “Adding Channel Cards”: Added Caution
Section 11.6, “Adding the Expansion Power Supply Unit”: Added Caution
CMPL 11M12A01-02E: Upgrade
CMPL 11M06B02-01E: Upgrade

Oct. 2004/2nd Edition
Asymmetry alarm added. Figure 8.17, Table 12.2 and 7) of Sec 12.2.3 changed.

Aug. 2004/1st Edition
Newly published

Blank Page