User Manual

Model PD20, PF20 and PS20 Compact pH Probe

EXA

YOKOGAWA ◆

IM 12B6K4-01E-E
8th Edition

CONTENTS

1. INTRODUCTION. 1
1-1. General. 1
1-2. Features. 1
1-3. Packing. 1
1-4. Description of (modular) parts and options. 1

2. EXA COMPACT FLOW PROBE MODEL PF20. 5
2-1. Introduction. 5
2-2. Specifications. 6
2-3. installation and Mounting. 7
2-4. Wiring. 9
2-5. Consumables and accessories. 10

3. EXA COMPACT DIRECT INSERTION PROBE MODEL PS20. 11
3-1. Introduction. 11
3-2. Specifications. 13
3-3. installation and Mounting. 12
3-4. Wiring. 16
3-5. Consumables and accessories. 16

4. EXA COMPACT IMMERSION PROBE MODEL PD20. 19
4-1. Introduction. 19
4-2. Specifications. 19
4-3. installation and Mounting. 21
4-4. Consumables and accessories. 23
4-5. Wiring. 23

5. AUTOMATIC CHEMICAL CLEANING. 25
5-1. Introduction. 25
5-2. Mounting and maintenance. 25

6. FLOW ELECTRODE WITH KCl RESERVOIR. 27
6-1. Introduction. 27
6-2. Mounting and maintenance. 27

1. INTRODUCTION

1-1. General

EXA Compact is a versatile series of probes suitable for pH measurements in all common applications in industrial processes and (waste) water treatment installations.
EXA Compact is available as a flow type, an insertion type and an immersion type of fitting. A wide choice of process connections is available to make installation in a tank, open basin or pipe/bypass very simple. The careful choice of chemically resistant materials makes it suitable for most processes.
The EXA Compact probe is flexible in use and its small size and light weight makes it easy to handle.
EXA Compact comes as a complete system including a basic holder with temperature sensor, a spray unit for chemical cleaning and one combination cable.
The EXA Compact System is perfectly suited for the advanced capabilities of the EXA PH402, EXA PH202,PH450 or FLEXA21 analyser, e.g.: sensor diagnostics and automatic chemical cleaning, resulting in a reliable pH-loop with outstanding performance.

1-2. Features

- Available for flow-, insertion- and immersion mounting
- Intergrated liquid earth suited for sensor diagnostics with the EXA pH- series.
- Suitable for measurement with double sided high impedance input circuits.
- Intergrated spray unit for chemical cleaning.
- Intergrated temperature sensor (Pt100 or Pt1000) supporting automatic temperature compensation.
- Electrode removal without twisting the cable.
- One combination cable incorporating all leads and shields.
- Easy installation by modular designand many process connections.
- All-in-one system eases stock and order processing.
- Non-flow combination electrode with PTFE-diaphragm.
- Wetted parts from Ryton and stainless steel (or hastelloy) for excellent chemical resistance.
- Flow electrode for severe fouling and poisoning applications.

1-3. Packing

The EXA Compact probe is supplied in seperate parts, packed in a box. The parts are protected by chips. When ordered, an optional electrode will be also enclosed in its own electrode box.
The 1 m or 2 m insertion tube of an EXA Compact Immersion probe will be supplied seperately.

1-4. Description of (modular) parts and options

Reference liquid (KCl) reservoir (optional)

The reference liquid reservoir is used to supply electrolyte (KCl) to the flow electrode when used. This gives a constant out-flow of electrolyte into the process preventing penetration of process liquid into the electrode. It protects the reference electrode against risk of poisoning. For this purpose the reservoir can also be pressurized up to 5 bar. The reservoir with electrolyte saves maintenance costs and, because of its transparancy, the electrolyte is shown all the time. Mounting and demounting on the protective cap is very simple so the standard system can retrospectively be upgraded to a flow version if necessary.

Figure 1. liquid reservoir with protection cap

Protection hood with cap

The protection hood with cap protects the electrolyte head and electronical connections of the basic holder against rain , dust and mechanical damage. It can be withdrawn easily from the basic holder to give fast access to the electrode and connection. The cap also retains the cable and tubes for electrolyte and chemical cleaning agent. Unlocking is easy by opening the cap.

Combination cable

The combination cable is a factory finished multi-core coax cable with simple connectors for the electrode an liquid earth with intergrated temperature sensor and a 7-lead connection to the converter. This allows a quick and simple installation on site.

Figure 2. Combination cable

Non-flow combination pH-electrodes

The non-flow combination electrodes are suitable for a wide range of applications. They are filled with gelled electrolyte and so requires no refilling. They have a large area PTFE diafragm which is particularly resistant to fouling. The unique construction of the Pe 13.5 electrode head allows the electrodes to be installed and removed without twisting the cable.

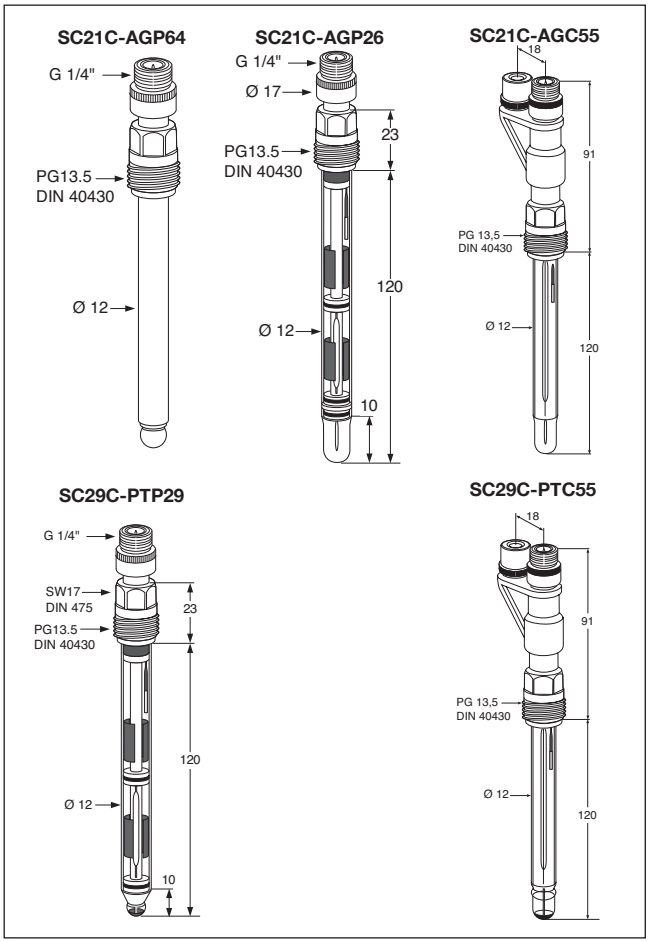

Figure 3. Non-flow types

Flow types

Flow combination electrodes
The flow combination electrodes are connected to the KCl reservoir which supplies a positive flow of electrolyte to prevent penetration of process liquid into the electrodes. This provides additional protection of the measurement against risk of poisoning or fouling.

Basic holder
This is the central unit of the system upon which the electrodes and all other parts are mounted. It includes the liquid earth pin which gives a stable measurement in combination with high impedance input circuits of the pH analyser. In the case of the EXA and FLEXA pH analyser it also supports the on line diagnostics of the sensor. The integral temperature sensor gives optimum accuracy over a wide range of process temperatures. With the spray unit a cleaning agent can be sprayed onto the pH electrode. In conjunction with EXA PH402, EXA PH450 and Flexa 21 instruments the dynamic response of the sensor is also checked.

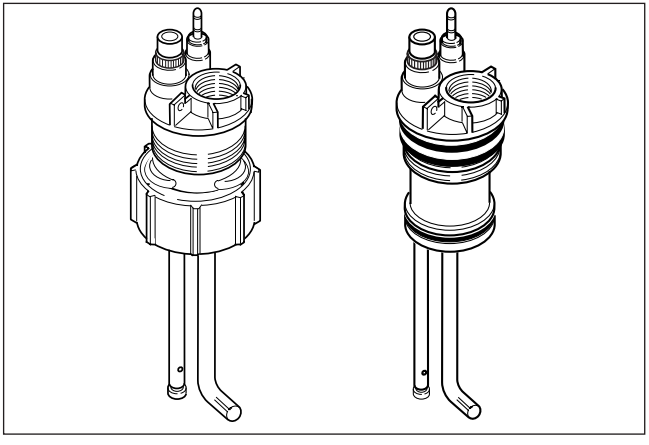

Figure 4. Basic holders

Flow vessel
The injection-mouled flow vessel is suitable for installation in a sample line. Flange connections for DIN or ANSI are available as well as a mounting plate.

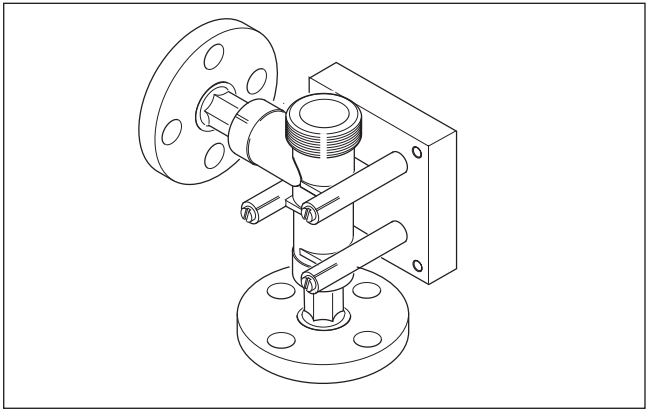

Figure 5. Flow vessel with optional flanges

Welding sockets
The probe can be supplied with welding sockets for direct insertion into a pipe or tank.

Figure 6. Welding sockets

Figure 7. T-pieces with adapter

Figure 8. Adjustable flange

Figure 9. Protection cage

Figure 10. Wall mounting clamp

T-pieces
T-pieces are available in PP or SS316 for installation directly in line.

Immersion probe
The immersion probe is suitable for installation in open or closed tanks using a gas-tight flange or clamps for wall mounting.
The protection cage shield the electrodes from mechanical damage and allows fast removal of the sensor for calibration.

2. EXA COMPACT PROBE MODEL PF20

2-1. Introduction

The EXA Compact flow system is ideal for installation in a by-pass circulation pipe line of a tank or fast sample loop from a large volume flow line (see fig 14). it has a very small dead volume giving immediate response to changes. By-pass measurement has the advantage of easy isolation. The fitting can be located at a convenient place and level with small diameter pipe-lines connected to the vessel.
The basic holder with electrode can be quickly taken off for inspection or calibration with the large fixing nut without twisting the cable.
The flow vessel has $^1/_2$" NPT female connections. In addition to that flange adapters are available for DN15 DIN flanges or $^1/_2$" ANSI flanges.
The inlet at the bottom gives an angled flow with the outlet on the horizontal level. When the outlet runs down the tip of the electrode will stay wetted with the sample.
The flow vessel can be surface mounted by three long bolts (M5) or by an optional wall mounting plate.

2-2. Specifications

Figure 11. Exa compact probe model

General specifiations

Wetted parts	
Holder	: Glass-filled PPS RYTON)
Earth pin	: Stainless steel 316L or Hastelloy 276C
0-ring	: Viton/NBR
Spray unit	: Stainless steel 316L or Hastelloy 276C
Flow vessel	: Glass-filled PPS (Ryton)
Flanges	: Reinforced polyester
Flange adapters	: Glass-filled PPS (Ryton) (optional)
General	
Cap	: EPDM rubber
protection hood	: Polypropylene
Length	: ±490 mm (without flanges) ±530 mm (with flanges)
Weight	: ±1 kg
Process conditions	
Temperature	: 0-70ºC
Pressure	: limits: 0-2 bar (0-200 kPa)
Flow rate	: max. 3 1/min.
Electrodes	: SC21C-AGP64 : SC21C-AGP26 : SC21C-AGC55 : SC29C-PTC55 : SC29C-PTP29 : 12 mm sensors with PG13.5 connector

Model and Suffix Code

Model Code	Suffix Code	Option Code	Description
PF20			Flow pH probe
Liquid earth	-00		No liquid earth (for sensors with integrated liquid earth)
	-RH		Liquid earth in Hastelloy 276C
	-RS		Liquid earth in Stainless steel 316L
Chemical cleaning	-CH		Chemical cleaning in Hastelloy 276C (Only available with -00 and -RH)
	-CS		Chemical cleaning in Stainless steel 316L (Only available with -00 and -RS
Cable length (and tubing length)	-00		No cable for use with VP-sensors
	-05		Cable length 5m (tubing length 10m) (Only available with -RH and -RS)
	-10		Cable length 10m (tubing length 10m) (Only available with -RH and -RS)
Temperature compensation	-00		No temperature sensor (Only available with -00)
	-T1		Temperature sensor Pt1000 (Only available with -RH and -RS)
	-T2		Temperature sensor Pt100 (Only available with -RH and -RS)
Style code	*A		Style A
Options		/FC	2x DN50-PN10 flanges in reinforced polyester
		/FD	2x ½" 150Lbs ANSI flanges in reinforced polyester
		/KR	KCL-reservoir
		/WM	Wall mounting plate (Use recommended with options /FC and /FD)
		/M	Material certificate 3.1(B) according to EN-10-024 (DIN50-049) (on wetted parts)

Note: - RS combines with - CS
- RH combines with - CH

Dimensions

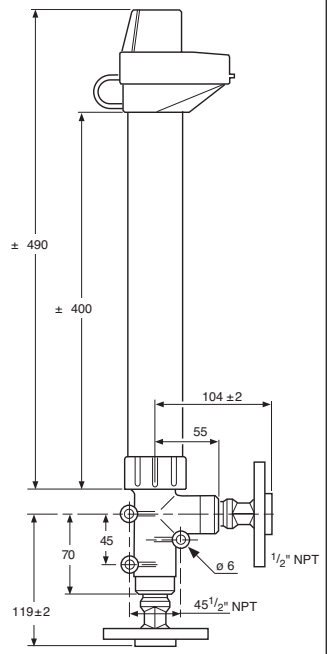

Din flange DN15 PN10
ANSI flange 1/2" 150 lbs.
Adapters-screwin - 1/2" 150 lbs. or
Adapters-screwin-DN 15 PN 10

Figure 12. Dimensions of the flow fitting

2-3. Installation and mounting

Packing check

The Compact Probe is delivered in parts and has to be put together before it can be used. Check if all the standard parts of the EXA Compact flow Probe:
no.1, 2, 3, 4 and 5 (see figure 13 and table 1) and (when ordered) the optional parts: no. 13, 14 and 15 (see figure 15 and table 1) are delivered and in accordance with the modelcode.

No.	Description
1.	Rubber cap
2.	Protection hood
3.	Basic holder, incl.:
8.	Rubber clamping ring
9.	Locking ring (*)
10.	Fixing nut
11.	"O"-ring (26.65x2.62)
12.	Liquid earth pin and temp. sensor
	Spray unit
4.	Flowvessel
5.	Combination cable
6.	Non-flow electrode (option/EN)
7.	"O"-ring (11x3)
13.	Wall Mounting plate, incl.:
14.	3 bolts (M5x80)
	(option/WM)
15.	2 Flanges and adapters
	(option /FC of /FD

(*): flat side of the ring upwards

Table 1, PF20: Parts and Options (see fig.13 and 15)

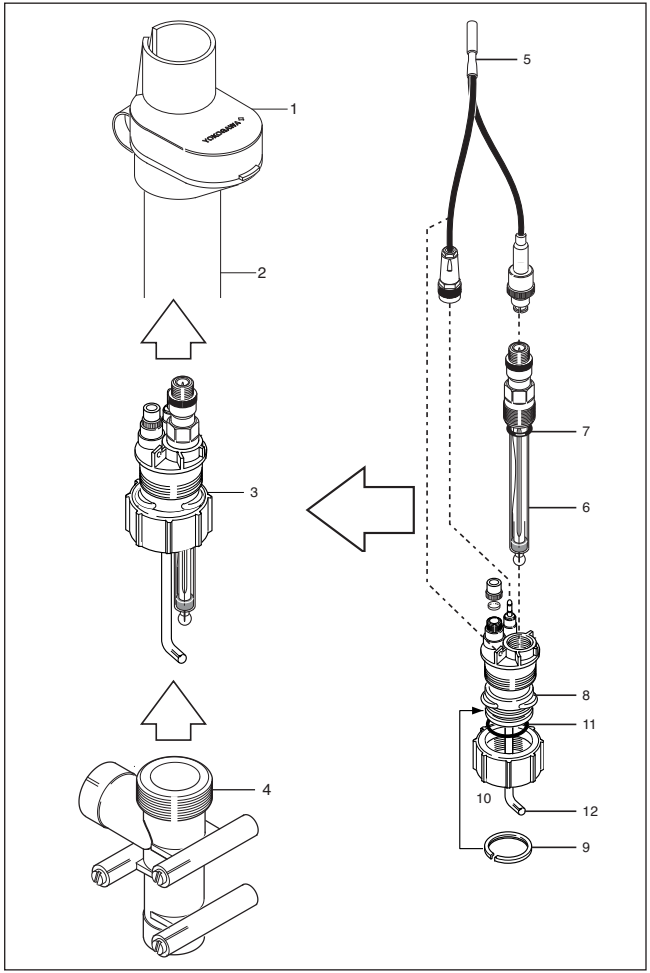

Figure 13. Exploded view flow fitting

Selection of installation site

- Install the probe in a place where it can be maintained easily and safely. (Attention: for maintenance or replacing the electrode a space of ±0.3 m above the top of the probe is required)
- Mount the Compact Flow Probe in a vertical position.
- The Flow Probe is ideal for installation in a bypass (circulation) line or sample loop from a large volume flow line. Preferably the Flow Probe should be mounted between 2 isolation valves and in a position as indicated in figure 14. Mounted in this way maintenance is easy and in flow conditions the tip of the electrode will always stay wetted.

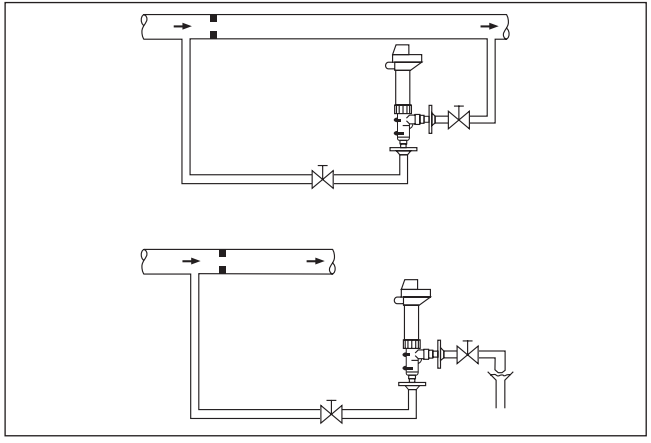

Figure 14. On-line measurement examples

Mounting (see figures 13 & 15 and table 1)

(1) Push the rubber cap (1) on to the protection hood (2)
(2) Mount the flow vessel (4) in the process, preferably as shown in figure 14. An optional wallmounting plate (13) with 3 bolts (14) and/or flanges with adapters (15) can also be used as shown in figure 15. (Attention: the screwthread of the flange adapters has to be taped before screwing into the flow vessel).
(3) Open the rubbercap and guide the combination cable (5) through the protection hood.
(4) Screw the electrode (6) with “O”-ring (7) into the basic holder (3).
(5) a. Connect the combination cable (5) onto the electrode and liquid earth connector of the basic holder (see figure 13).
    b. Connect the clip of the chain at the hole of the basic holder. This has a cable release function.
(6) When using an EXA Compact Probe with chemical cleaning or with a flow electrode: see §5 and 6 respectively.
(7) Push the protection hood onto the rubber clamping ring to fix it at the basic holder.
(8) Pull at the cable and clamp it into the middle ‘hole’ (cut out) of the rubber cap (see figure 17). Close the rubber cap.
(9) a. (***Attention:*** check if the “O”-ring (11) is still in place in the basic holder).
    b. Fix the basic holder at the flow vessel by screwing the fixing nut (10) ***handtight*** on the flow vessel.
    (***Attention:*** do not tape the screwthread of the flow vessel!).
(10) Connect the 7 leads of the cable to the pH-analyser (see wiring)

Maintenance (see fig.13)

(1) By simply unscrewing the fixing nut (10) and lifting up the basic holder from the flowvessel, the electrode is accesible for calibration or inspection.
(2) To get access to the connections at the top of the basic holder, first open the rubber cap and pull the cable upward out of the middle ‘hole’ of the cap (see fig.17). When tubes for KCl or chemical cleaning agent are used they must be pushed upwards through the holes to create space. Then the protection hood with cap can be easily lifted from the basic holder.
(3) Now the electrode can be removed very easily without twisting the cable by unscrewing the PG 13.5 nut at the electrode. (***Attention:*** the “O”-ring at the electrode should be replaced regularly to prevent leakage).
(4) All “O”-rings at the basic holder should be checked frequently to ensure a proper watertight sealing.

2-4. Wiring Diagram

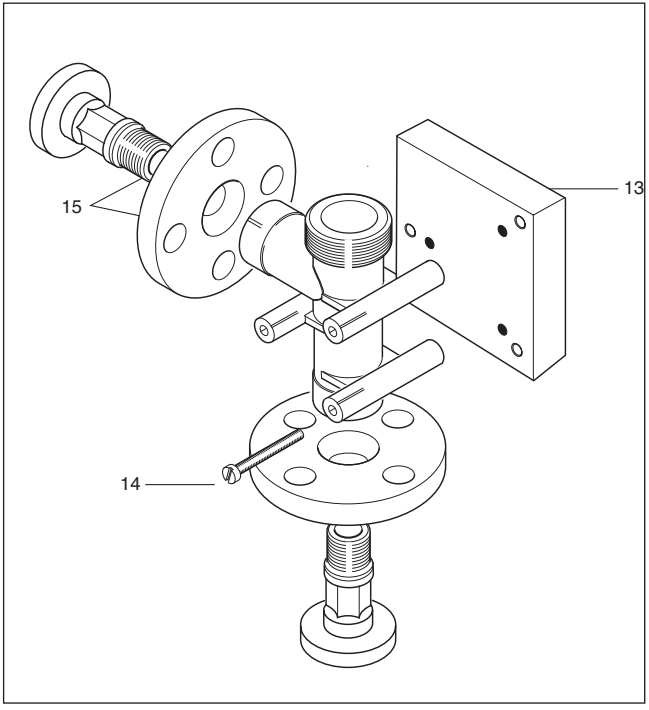

Figure 15. Exploded view PF20

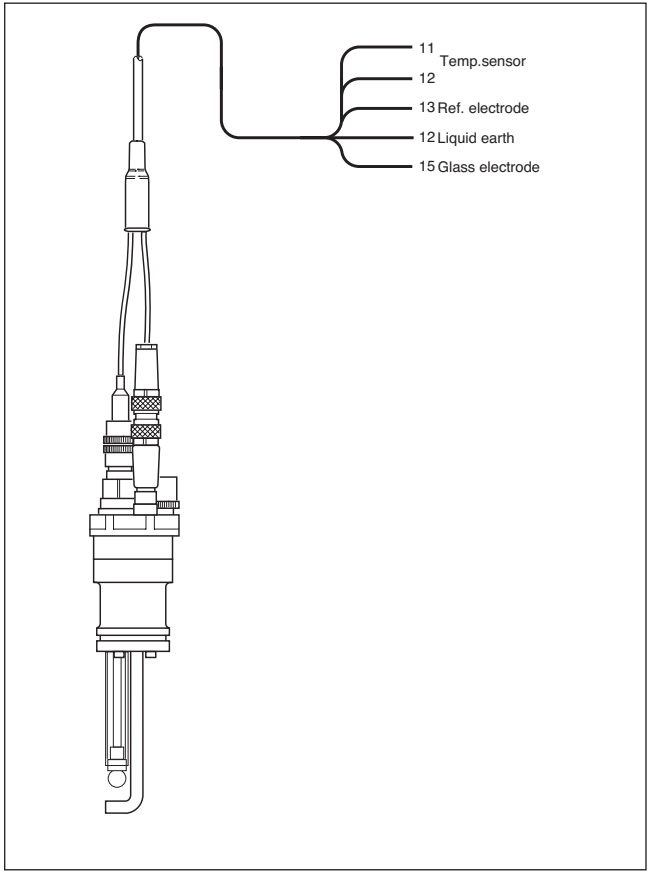

Figure 16. Wiring of compact fitting

2-5. Consumables and accessories

EXA Compact pH electrode

Part No.	Description of the electrode
SC21C-AGP64	Combined non-flow **pH** electrode with PTFE diaphragm.
SC21C-AGP26	Heavy duty Combined non-flow **pH** electrode with PTFE diaphragm.
SC21C-AGC55	Heavy duty Combined flowing **pH** electrode with PTFE diaphragm.
SC29C-PTC55	Combined flowing **REDOX** electrode with PTFE diaphragm.
SC29C-PTP29	Heavy duty Combined non-flow **REDOX** electrode with PTFE diaphragm.
Variopin sensors (SC24V a.o.)	12 mm sensors with PG13.5 connector

Flow model PF20

Part No.	Description of process connections
K1520GF	Wall mounting plate (use recommended with part K1500YC or K1500YD)
K1500YC	2xDN 15PN 10 Flanges in reinforced polyester
K1500YD	2x $^1/_2$" ANSI (class 150) Flanges in reinforced polyester
K1520YN	cable, 5 mtr
K1520YP	cable, 10 mtr

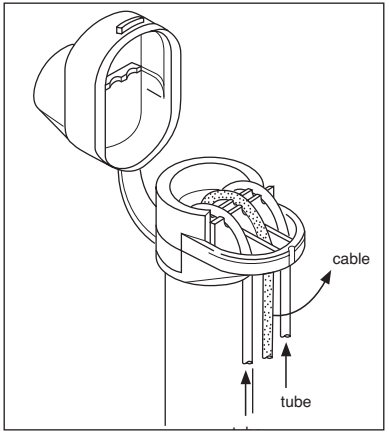

Figure 17. Tubing and cabling leads

number	colour	function
11.	red	temperature compensation
12.	blue	temperature compensation
13.	black	core reference electrode
14.	black	liquid earth
15.	white	core pH electrode

Spare parts PF20

Part No.	Description
K1500AD	Screw set for PF20/WM (3pcs)
K1500AE	O-ring set viton, PF/PS20 (5)
K1500BZ	O-rings Viton 11x3 (6Pcs)51250
K1500DW	Set of 12 cable nuts for WU20
K1500ES	O-ring set EPDM FF20P&F33
K1500FK	O-ring set Viton FF20P&F22
K1500YC	/FC, flanges DN15 PN10, PF20
K1500YD	/FD, flanges 1/2” NPT, PD20
K1500ZF	Ferrule set, flow/cleaning tube
K1520BP	Basic holder, PF20/PS20-00-CS-00
K1520BQ	Basic holder, PF20/PS20-00-CH-00
K1520BV	Basic holder, PF20/PS20-RS-CS-T1
K1520BW	Basic holder, PF20/PS20-RS-CS-T2
K1520BX	Basic holder, PF20/PS20-RH-CH-T1
K1520BY	Basic holder, PF20/PS20-RH-CH-T2
K1520DC	Flow chamber for PF20

Part No.	Description
K1520DT	Protection tube for PF/PS20
K1520EA	Rubber cap for P*20
K1520ET	Spraying valve for P*20
K1520FJ	Tubing set, chem. cleaning 5m
K1520FK	Tubing set, chem. cleaning 10m
K1520GF	/WM for PF20
K1520JN	Adapter M25x1.5 - PG13.5
K1520YA	/KR for PD/PF/PS20 holders
K1520YN	PD/PF/PS20 cable, 5 m
K1520YP	PD/PF/PS20 cable, 10 m
K1520ZD	Mounting nut for PS20
K1530UL	Tubing for FD30/JC, 10 m
K1542DM	O-rings silicone 20.3X2.62 (3)
K1542DK	O-rings viton 20.3X2.62 (3)
K1542DL	O-rings EPDM 20.3X2.62 (3)
K1547PH	10 m Nylon Tube and mounting

3. EXA COMPACT DIRECT INSERTION PROBE MODEL PS20

3-1. Introduction

The EXA compact direct insertion system is ideal for installation directly in a flow line or tank (see fig. 22). With a choice of adapters the system can be used in a variety of applications. The standard $1^1/_4$"BSP female connection can be mounted into the stainless steel weld-in sockets. These sockets are either welded from a vertical or angled position into the wall of the tank or into a pipe (see fig. 22). The minimal angle for mounting is 15º from the horizontal level. For mounting into a tapered stud we provide a polypropylene $1^1/_4$" BSPT male or a stainless steel 1"NPT male adapter. Further accessories include T-pieces in polypropene (1" BSPP) or stainless steel ("NPT) for easy fitting into a piping system. These wide bore systems have the advantage of keeping the electrode clean through the high flow velocity. The disadvantage is that for inspection or calibration the flow has to be stopped.

Figure 18. EXA compact insertion probe

3-2. Specifications

Wetted parts

Holder	: Glass-filled PPS RYTON)
Earth pin	: Stainless steel 316L or Hastelloy 276C
0-ring	: Viton
Weld in adapters	: Stainless steel 316
T-piece with adapter	: Stainless steel 316 or Polypropylene

General

Cap	: EPDM rubber
Protection hood	: Polypropylene
Length	: ±375 mm (without options)
	±475 mm (with T-piece)
	±425 mm (with welding socket)
Weight	: ±0.50 kg (with electrode)
	±0.75 kg (with T-piece)
	±1.00 kg (with T-piece in SS316)
	±0.65 kg (with welding socket)

Process

Temperature	: 0-70ºC
Pressure	: limits: 0-2 bar (0-200 kPa)
Flow rate	: max. 20 1/min.

Electrodes	: SC21C-AGP64
	: SC21C-AGP26
	: SC21C-AGC55
	: SC29C-PTC55
	: SC29C-PTP29
	: 12 mm sensors with PG13.5 connector

Model and Suffix Code

Model Code	Suffix Code	Option Code	Description
PS20			Direct insertion pH probe
Liquid earth	-00		No liquid earth (for sensors with integrated liquid earth)
	-RH		Liquid earth in Hastelloy 276C
	-RS		Liquid earth in Stainless steel AISI 316L
Chemical cleaning	-CH		Chemical cleaning in Hastelloy 276C
			(Only available with -00 and -RH)
	-CS		Chemical cleaning in Stainless steel AISI 316L
			(Only available with -00 and -RS)
Cable (and tubing length)	-00		No cable for use with VP-sensors
	-05		Cable length 5m (tubing length 10m)
			(Only available with -RH and -RS)
	-10		Cable length 10m (tubing length 10m)
			(Only available with -RH and -RS)
Temperature	-00		No temp. sensor compensation (Only available with -00)
	-T1		Temp. sensor Pt1000 (Only available with -RH and -RS)
	-T2		Temp. sensor Pt100 (Only available with -RH and -RS)
Style code	*A		Style A
Options		/KR	KCL-reservoir
		/NP	ISO 7/1-R1¼ (male PP)
		/NS	ANSI B 1.20.6M 1”NPT (male SS316)
		/TP	T-piece (PP); 2xISO 228/1-G1 female (incl. option /NP)
		/TS	T-piece (AISI 316); 2x ANSI B 1.20.6M 1”NPT female
			(including. option /NS)
		/WA	Angle welding (AISI 316)
		/WS	Straight welding (AISI 316)
		/M	Mat. cert. 3.1 acc. to EN-10-024 (DIN50-049) on wetted parts

Note: -RS combines with -CS and -RH combines with -CH

Dimensions

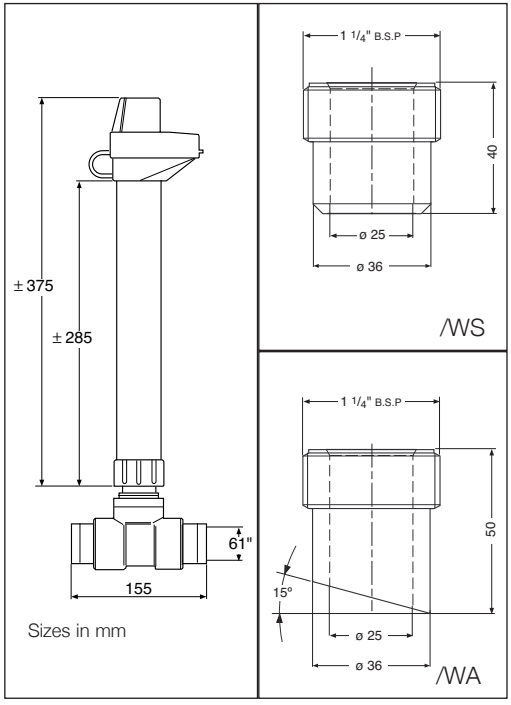

Figure 19. Dimensions of the subassembly

3-3. Installation and mounting

Packing Check

The Compact Probe is delivered in parts and has to be put together before it can be used. Check if all the standard parts of the EXA Compact Direct Insertion Probe: no. 1,2,3 and 4 (see fig. 20 and table 2) and (when ordered) the optional parts: no. 12-17 (see fig. 23 and 24 and table 2) are delivered and in accordance with the modelcode.

Selection of installation site

- Install the probe in a place where it can be maintained easily and safely. (Attention: for maintenance or replacing the electrode a space of ±0.3m above the top of the probe is required)
- Mount the Compact Direct Insertion Probe into the process so that the electrode is in a position shown in fig. 21
- The Direct Insertion Probe is ideal for installation directly in a flow line or tank. Preferably the Direct Insertion Probe should be mounted between 2 isolation valves in a position as indicated in fig. 22 Mounted in this way maintenance is easy and in flow conditions the tip of the electrode will always stay wetted

No.	Description	No.	Description
1.	Rubber cap	4.	Combination cable
2.	Protection hood	5.	Non-flow electrode (option /EN0
3.	Basic holder, incl.:		
8.	Rubber clamping ring	6.	"O"-ring (11x3)
9.	Locking ring (*)	12.	Adapter in PP (option /NP)
10.	Fixing nut	13.	T-piece in PP (option /TP)
11.	"O"-ring (26.65x2.62)	14.	Adapter in SS316 (option /NS)
12.	Liquid earth pin and temp. sensor	16.	Angle welding socket (option /WA)
	Spray unit		
		17.	Straight welding socket (option /ws)

(*) flat side of the ring upwards

Table 2, PS20: Parts and Options (see fig. 20, 23 and 24)

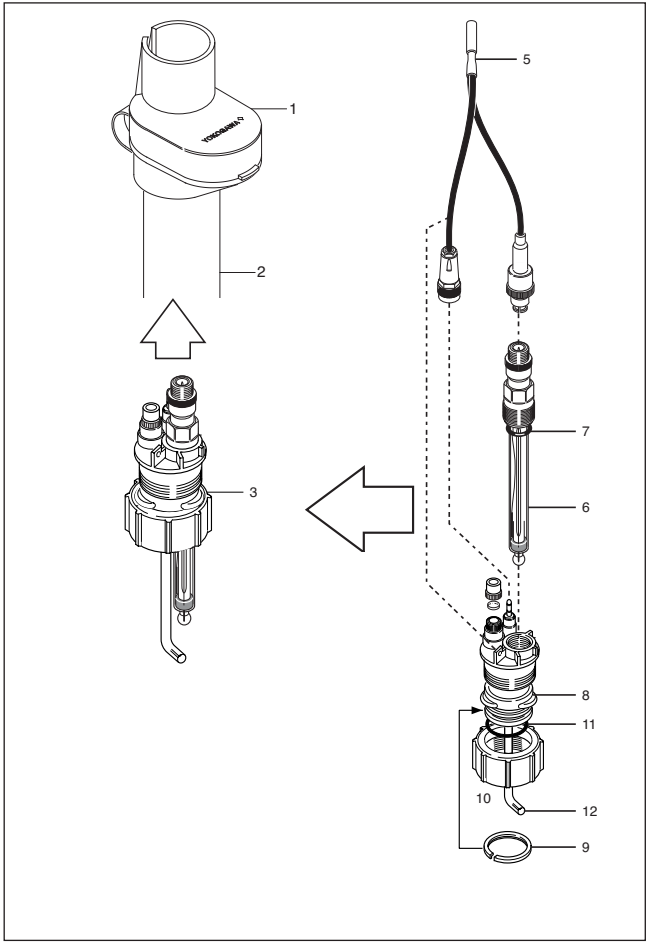

Figure 20. Exploded view subassembly

Mounting (see fig. 20, 23, 24 and table 2)

(1) Push the rubber cap (1) onto the protection hood (2)
(2) Open the rubber cap and guide the combination cable (5) through the protection hood.
(3) Screw the electrode (5) with “O”-ring (6) into the basic holder (3)
(4) a. Connect the combination cable (5) onto the electrode and liquid earth connector of the basic holder (see fig. 20).
    b. Connect the clip of the chain at the hole of the basic holder. This has a cable release function.
(5) When using an EXA Compact Probe with chemical cleaning or flow electrode: see § 5 and 6 respectively.
(6) Push the protection hood onto the rubber-clamping ring to fix it at the basic holder.
(7) Pull at the cable and clamp it into the middle ‘hole’ (cut out) of the rubber cap (fig 26). Close the rubber cap.
(8) (Attention: check if the “O”-ring (11) is still in place in the basic holder). Now the Direct Insertion Probe can be easily screwed onto a 1¼”BSP male process connection (like all options have) by screwing the fixing nut (9) handtight. (Attention: do not tape the screwthread of the process connection!)

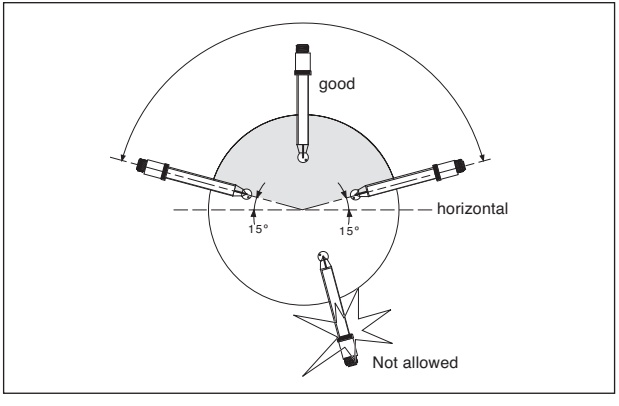

Figure 21. Electrode minimum angle

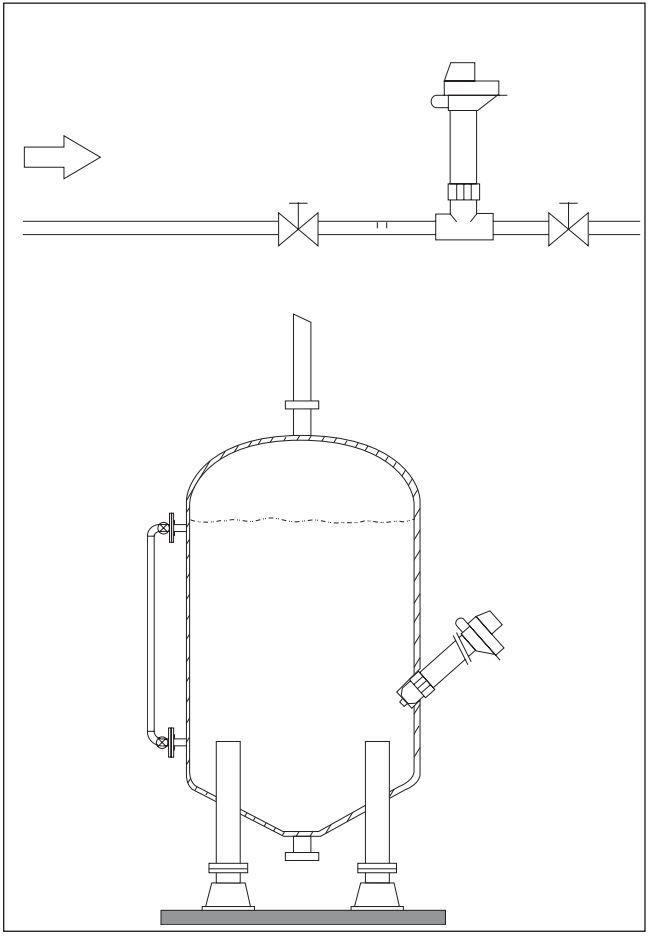

Figure 22. Mounting examples

(9) a. Optional adapters with process connections $1^{1}/_{4}$"BSPT male (12) or 1" NPT male (14) have to be taped only at the process side!. They are also used in combination with the optional T-pieces (13 and 15).
    b. Optional welding sockets for direct mounting into a pipeline or tank can be welded straight (17) or angled (16), but the electrode must be in a position as shown in fig. 21.

(10) Connect the 7 leads of the cable on the pH-analyser (see wiring diagram § 3-4).

Maintenance (see fig. 20)

(1) By simply unscrewing the fixing nut (10) and lifting up the basic holder from the process connection, the electrode is accessible for calibration or inspection.
(2) To get access to the connection at the top of the basic holder, first open the rubber cap and pull the cable upward out of the middle 'hole' of the cap (see fig. 26). When tubes for KCl or chemical cleaning agent are used, they must be pushed upwards through the holes to create space. Then the protection hood with cap can be easily lifted from the basic holder.
(3) Now the electrode can be removed very easy without twisting the cable by unscrewing the Pg 13.5 nut at the electrode. (Attention: the "O"-ring at the electrode should be replaced regularly to prevent leakage).
(4) All "O"-rings at the basic holder should be checked frequently to ensure a proper watertight sealing.

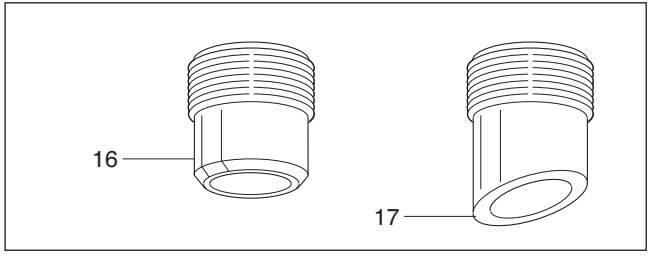

Figure 23. Adapters used for welding

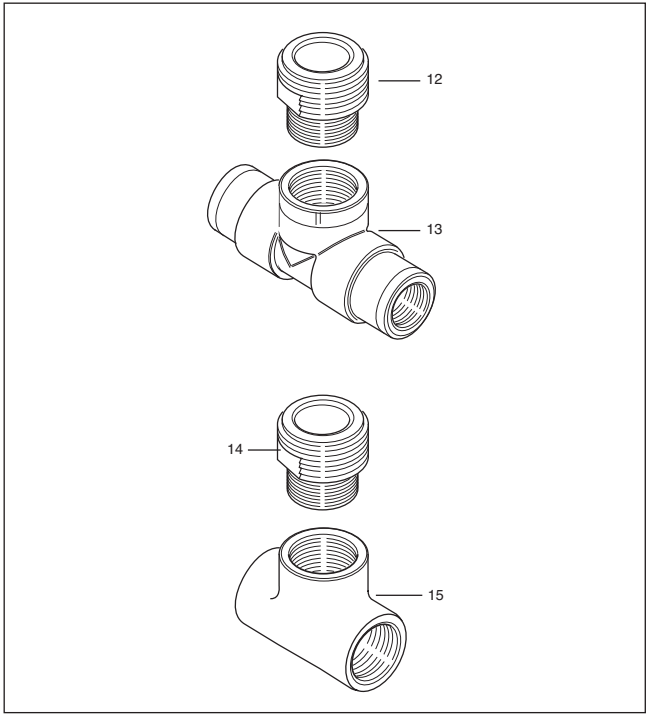

Figure 24. Adapters used for screwing adapters

3-4. Wiring Diagram

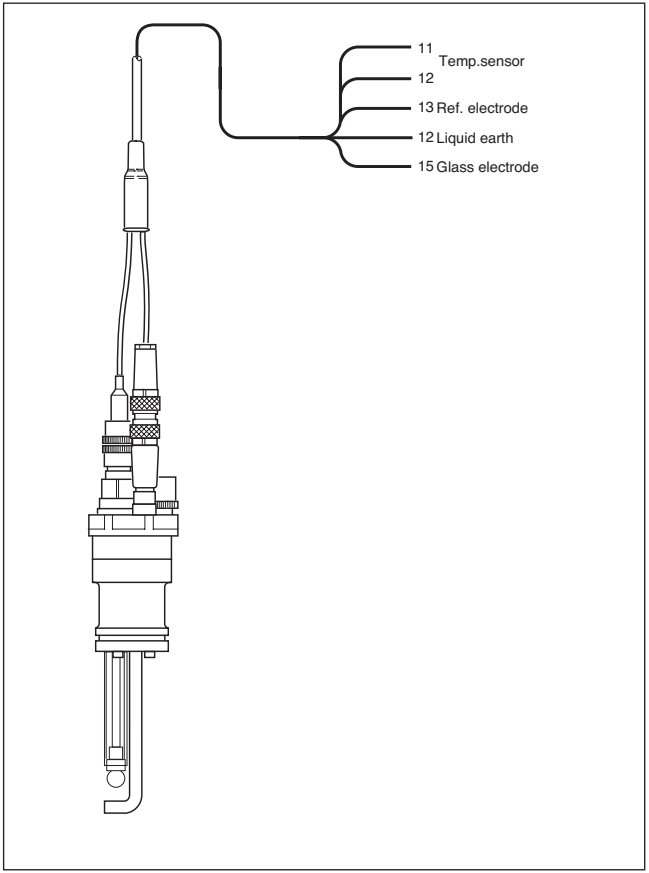

Figure 25. Wiring diagram of subassembly

3-5. Consumables and accessories

EXA Compact pH electrode

Part No.	Description of electrode
SC21C-AGP64	Combined non-flow **pH** electrode with PTFE diaphragm.
SC21C-AGP26	Heavy duty Combined non-flow **pH** electrode with PTFE diaphragm.
SC21C-AGC55	Heavy duty Combined flowing **pH** electrode with PTFE diaphragm.
SC29C-PTC55	Combined flowing **REDOX** electrode with PTFE diaphragm.
SC29C-PTP29	Heavy duty Combined non-flow **REDOX** electrode with PTFE diaphragm.
Variopin sensors (SC24V a.o.)	12 mm sensors with PG13.5 connector

Direct Insertion model PS20

Part No.	Description of process connections
K1520CZ /NP	11/4” BSPT male (PP)
K1520DZ /NS	1” NPT male (SS 316)
K1520EJ /WS	Straight welding (SS 316)
K1520EK /WA	Angle welding (SS 316)
K1520YE /TP	T-piece (PP), 2 x ISO 228/1-G1 female (incl. K1520CZ)
K1520YF /TS	T-piece (SS 316), 2 x ISO 228/1-G1 female (incl. K1520DZ)
K1520ZD	Ryton mounting nut for PS20

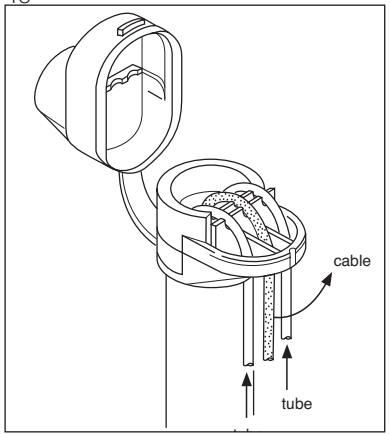

Figure 26. Tubing and cabling leads

number	colour	function
11.	red	temperature compensation
12.	blue	
13.	black	core reference electrode
14.	black	liquid earth
15.	white	core pH electrode

Spare parts PS20

Part No.	Description
K1500AE	O-ring set viton, PF/PS20 (5)
K1500BZ	O-rings Viton 11x3 (6Pcs)51250
K1500DW	Set of 12 cable nuts for WU20
K1500FK	O-ring set Viton FF20P&F22
K1500ZF	Ferrule set, flow/cleaning tube
K1520BV	Basic holder, PF20/PS20-RS-CS-T1
K1520BW	Basic holder, PF20/PS20-RS-CS-T2
K1520BX	Basic holder, PF20/PS20-RH-CH-T1
K1520BY	Basic holder, PF20/PS20-RH-CH-T2
K1520CZ	/NP for PS20 (1 1/4”BSPT),PP
K1520DT	Protection tube for PF/PS20
K1520DZ	Adapter 1”NPT-male, SS
K1520EA	Rubber cap for P*20
K1520EJ	Straight weld-in adapter, SS
K1520EK	Angled weld-in adapter, SS
K1520ET	Spraying valve for P*20
K1520FJ	Tubing set, chem. cleaning 5m
K1520FK	Tubing set, chem. cleaning 10m
K1520JN	Adapter M25x1.5 - PG13.5
K1520YA	/KR for PD/PF/PS20 holders
K1520YE	/TP (PP) for PS20
K1520YF	/TS (SS) for PS20
K1520YN	PD/PF/PS20 cable, 5 m
K1520YP	PD/PF/PS20 cable, 10 m
K1520ZD	Mounting nut for PS20
K1530UL	Tubing for FD30/JC, 10 m
K1542DM	O-rings silicone 20.3X2.62 (3)
K1542DK	O-rings viton 20.3X2.62 (3)
K1542DL	O-rings EPDM 20.3X2.62 (3)
K1547PH	10 m Nylon Tube and mounting

4. EXA COMPACT IMMERSION PROBE MODEL PD20

4-1. Introduction

The EXA Compact immersion fitting system is ideal for installation in open and closed tanks or channels. The light weight and small diameter make it easy to handle. For maintenance the basic holder with electrodes comes without tools or turning, leaving the cable untwisted.
Standard lengths of 1 or 2 meter are available. When the rubber cap is removed, from the top, the pipe can be shortened at wish.
Mounting with the optional gas-tight sliding flange is ideal for installation in a closed tank. The immersion fitting depth can be varied by sliding the pipe through the flange.
The flange has both DIN DN50 and ANSI 2”fixing holes.
Mounting in open vessels or channels is easy with the optional clamps for wall mounting. The immersion depth into the process can be adjusted by sliding the tube through th clamps.

Figure 27. Immersion probe

4-2. Specifications

General specification

Wetted parts

Holder	: Glass-filled PPS RYTON)
Earth pin	: Stainless steel 316L or Hastelloy 276C
0-ring	: Viton
Immersion tube	: High temperature polyvinyl-chloride (PVC-C)
Protection cable	: Reinforced polypropylene
Flange	: Reinforced polypropylene

General

Cap	: EPDM rubber
Protection hood	: Polypropylene
Wall Mounting	: Polypropylene
Length	: ±1180 mm (1mtr. probe) ±2180 mm (2mtr. probe)
Weight	: ±1.0 kg (1 mtr. probe) ±1.6 kg (2 mtr. probe) ±0.35 kg (flange)

Process

Temperature	: limits 0-70ºC
Pressure	: limits 0-0.5 bar (50kPa)
Flow speed	: limits 0-5 m/s

Electrodes	: SC21C-AGP64
	: SC21C-AGP26
	: SC21C-AGC55
	: SC29C-PTC55
	: SC29C-PTP29
	: 12 mm sensors with PG13.5 connector

Model and Suffix Code

Model Code	Suffix Code	Option Code	Description
PD20			Immersion pH probe
Liquid earth	-00		No liquid earth (for sensors with integrated liquid earth)
	-RH		Liquid earth in Hastelloy 276C
	-RS		Liquid earth in Stainless steel 316L
Chemical cleaning	-CH		Chemical cleaning in Hastelloy 276C (only available with -00 and -RH)
	-CS		Chemical cleaning in Stainless steel AISI 316L (only available with -00 and -RS)
Cable length (and tubing length)	-00		No cable for use with VP-sensors
	-05		Cable length 5m (tubing length 10m) (only available with -RH and -RS)
	-10		Cable length 10m (tubing length 10m) (only available with -RH and -RS)
Length of insertion tube	1		1m (adjustable on site)
	2		2m (adjustable on site)
Temperature compensation	-00		No temperature sensor (only available with -00)
	-T1		Temperature sensor Pt1000 (only available with -RH and -RS)
	-T2		Temperature sensor Pt100 (only available with -RH and -RS)
Style code	*A		Style A
Options		/FA	Flange (PP), DN 50 (holes acc. to PN10) and 2” (holes acc. to ANSI)
		/KR	KCL-reservoir
		/CW	2 Clamps (PP) for wall mounting (not available with option /FA.)
		/M	Material certificate 3.1 according to EN-10-024 (DIN50-049) (on wetted parts)

Dimensions

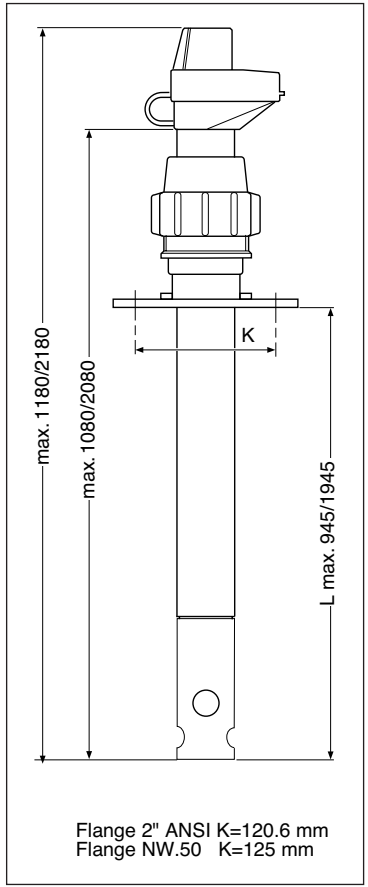

Figure 28. Immersion probe dimensions

4-3. Installation and mounting

Packing Check

The compact probe is delivered in parts and has to be put together before it can be used. Check if all the standard parts of the EXA compact immersion probe: no 1, 2, 3 and 4 (already mounted together) and 5 (see fig. 29 and table 3) and (when ordered) the optional parts: no. 12 and 13 (see fig. 30 and table 3) are delivered and in accordance with the modelcode.

Selection of installation site

- The immersion probe is ideal for installation in open or closed tanks or channels
- Install the probe in a place where it can be maintained easily and safely.

No.	Description	No.	Description
1.	Rubber cap	4.	protection cage
2.	Immersion tube	5.	combination cable
3.	Basic holder, incl.:	6.	Non-flow electrode (option /EN)
8.	2 "O"-ring (37.77x2.62)	7.	"O"-ring (11x3)
9.	2 PVDF rings	12.	Adjustable flange (option /FA)
10.	"O"-ring (31.42x2.62)	13.	2 Wall mounting clamps (option /CW)
11.	Liquid earth pin and temp. sensor		
	Spray unit (optional: see fig. 14)		

Table 3. PD20: Parts and Options (see fig. 29)

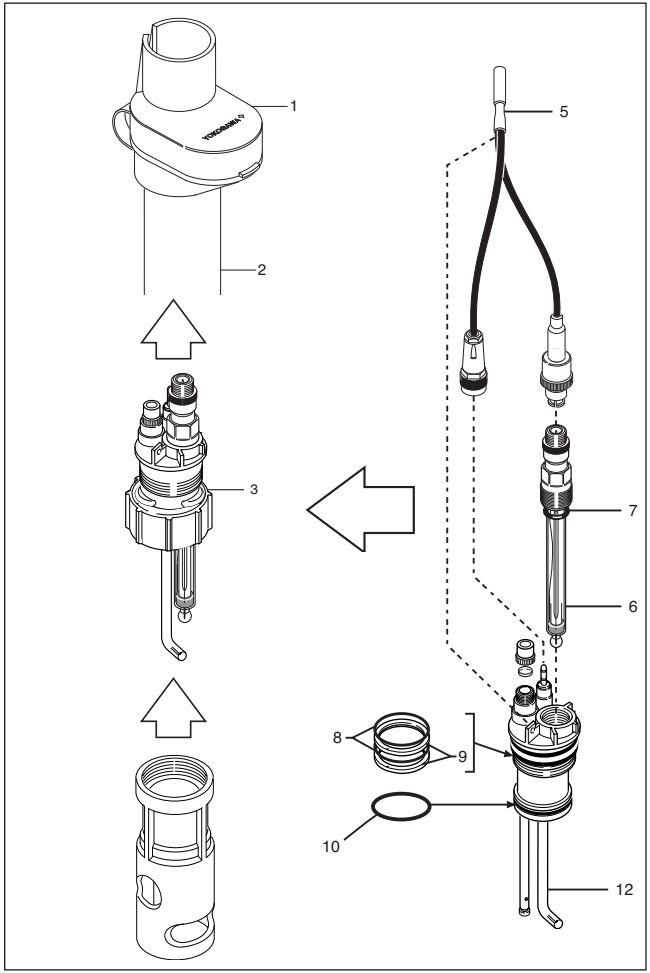

Figure 29. exploded view immersion fitting

Mounting (see fig. 29 & 30 and table 3)

(1) Push the rubber cap (1) onto the top of the immersion tube (2). The bottom end of the immersion tube -the process side- has a cam inside!
(2) An optional adjustable flange (12) must now be pushed onto the immersion tube from the bottom end. By unscrewing the nut and the flange, it can be slid onto the tube and fixed at any desired position.
(3) Open the rubber cap and guide the connection cable (5) through the protection hood.
(4) Screw the electrode (6) with O-ring (7) into the basic holder (3).
(5) a. Connect the combination cable (5) onto the electrode and liquid earth connector of the basic holder (see fig. 29)
    b. Connect the clip of the chain at the hole of the basic holder. This has a cable tension release function.
(6) When using an EXA compact probe with chemical cleaning or flow electrode: see chapter 5 and 6 respectively.
(7) a. Slightly unscrew the protection cage (4) from the basic holder (3) in such a way that the 2 O-rings (8) are not in the clamping/sealing position anymore.
    b. Push the basic holder with protection cage into the bottom end of the immersion tube, which has a fold inside.
    c. Push the basic holder into the bottom into the bottom end of the immersion tube aligning the white spot opposite to the inside cam. Twist it clock-wise until it fits tight.
    d. Screw the protection cage tight onto the basic holder (the fold inside will keep the basic holder in place), the 2 O-rings (8) will expand and together with O-ring (10) they form a watertight seal.
(8) Pull the cable and clamp it into the middle “hole” (cut out) of the rubber cab (fig. 32). Close the rubber cap.
(9) Optional wall mounting clamps (13) can be used to secure the immersion tube in any desired vertical position. It is also possible to use the optional flange for mounting.
(10) Connect the 7 leads of the cable at the pH analyser (see wiring diagram section 4-5).

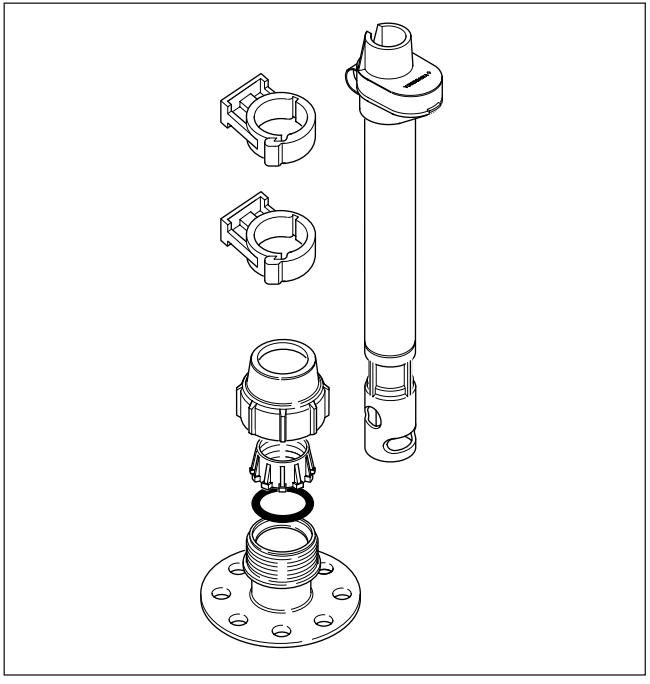

Figure 30. Mounting of the immersion fitting

Maintenance (see fig. 29)

(1) List the immersion tube out of the process
(2) The protection cage 4) can be easily unscrewed from the basic holder (3), so that the electrode is accessible for calibration or inspection
(3) To get access to the connection at the top of the basic holder, first open the rubber cap and pull the cable upwards out of the middle “hole” of the cap (see fig. 32). When the tubes for KCl or chemical cleaning agent are used, they must be pushed

upwards through the holes to created space. The basic holder can be easily pulled of the immersion tube.

(4) Now the electrode can be removed very easy without twisting the cable by unscrewing the PG13.5 nut at the electrode. (attention: the O-ring at the electrode should be replaced regularly to prevent leakage).

(5) All O-rings at the basic holder should be checked frequently to ensure a proper watertight sealing.

4-4 Consumables and accessories

EXA Compact pH Electrodes

Part No.	Description of electrode
SC21C-AGP64	Combined non-flow **pH** electrode with PTFE diaphragm.
SC21C-AGP26	Heavy duty Combined non-flow **pH** electrode with PTFE diaphragm.
SC21C-AGC55	Heavy duty Combined flowing **pH** electrode with PTFE diaphragm.
SC29C-PTC55	Combined flowing **REDOX** electrode with PTFE diaphragm.
SC29C-PTP29	Heavy duty Combined non-flow **REDOX** electrode with PTFE diaphragm.
Variopin sensors (SC24V a.o.)	12 mm sensors with PG13.5 connector

Immersion model PD20

Part No.	Description of electrode
K1500YA /CW	clamps (PP)
K1520EV /FA	Flange (PP), DN50 (holes acc. to PN10) or 2” (holes acc. to ANSI)

4-5. Wiring Diagram

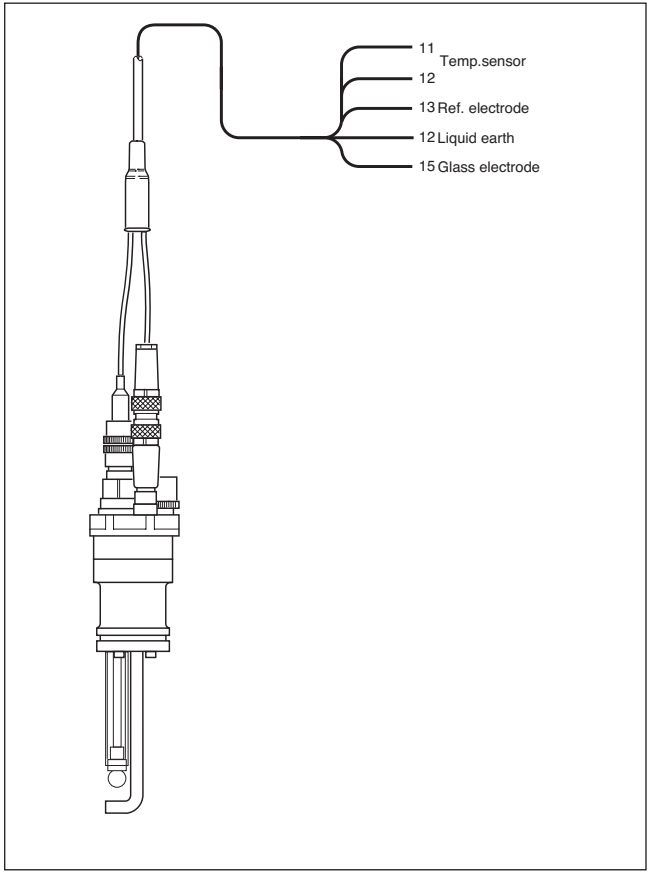

Figure 31. Wiring of the immersion fitting

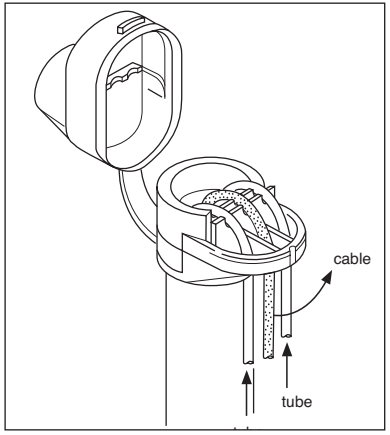

Figure 32. Tubing and cabling leads

number	colour	function
11.	red	temperature compensation
12.	blue	
13.	black	core reference electrode
14.	black	liquid earth
15.	white	core pH electrode

Spare parts PD20

Part No.	Description
K1500AJ	O-rings EPDM for /FA (2pcs)
K1500BZ	O-rings Viton 11x3 (6Pcs)51250
K1500DW	Set of 12 cable nuts for WU20
K1500YA	/CW, clamps (PP), PD20
K1500ZF	Ferrule set, flow/cleaning tube
K1520BM	Basic holder,PD20-00-CS-00
K1520BN	Basic holder, PD20-00-CH-00
K1520BR	Basic holder, PD20-RS-CS-T1
K1520BS	Basic holder, PD20-RS-CS-T2
K1520BT	Basic holder, PD20-RH-CH-T1
K1520BU	Basic holder, PD20-RH-CH-T2
K1520DG	Protection cage for PD20
K1520DS	Pipe, 2 m for PD20
K1520DU	Pipe, 1 m for PD20
K1520EA	Rubber cap for P*20
K1520ET	Spraying valve for P*20
K1520EV	/FA for ISC40FD and PD20
K1520FJ	Tubing set, chem. cleaning 5m
K1520FK	Tubing set, chem. cleaning 10m
K1520JN	Adapter M25x1.5 - PG13.5
K1520YA	/KR for PD/PF/PS20 holders
K1520YN	PD/PF/PS20 cable, 5 m
K1520YP	PD/PF/PS20 cable, 10 m
K1520ZA	O-rings viton 37.77x2.62 (2pcs)
K1520ZB	O-ring set viton, for PD20
K1530UL	Tubing for FD30/JC, 10 m
K1542DM	O-rings silicone 20.3X2.62 (3)
K1542DK	O-rings viton 20.3X2.62 (3)
K1542DL	O-rings EPDM 20.3X2.62 (3)
K1547PH	10 m Nylon Tube and mounting

5. AUTOMATIC CHEMICAL CLEANING

5-1. Introduction

The EXA compact pH probe can be easily upgraded with an integrated spray unit for a chemical cleaning of the electrode, where there is a risk of fouling. This reduces the maintenance costs.
As can be seen from fig. 35, the EXA compact pH probe should be connected to a pump (or solenoid valve), spraying the cleaning agent from a reservoir onto the electrode. A pump pressure from 3 to 10 bar is needed to achieve an effective cleaning. The EXA PH402, EXA PH450 and Flexa analyser with build-in wash timer is used for controlling the automatic chemical cleaning cycle.
Depending on the cleaning agent used and the process conditions, a choice can be made for a spray unit in stainless steel or hastelloy (see model code). In many processes ±3-5% HCl or hot water only is sufficient to achieve a cleaning effect. By using a pump pressure of ±10 bar a mechanical cleaning effect will also be achieved.
Yokogawa is able to deliver the complete configuration. Contact our local Yokogawa dealer for this package.

5-2. Mounting and maintenance (see fig. 33, 34, 35)

After the combination cable is connected at the basic holder the tube used for chemical cleaning (OD = 1/4", l=5 or 10 mtr.) can be mounted.

(1) Guide the tube through one of the outer holes of the rubber cap (see fig. 17, 26 or 32) and through the protection hood or immersion tube towards the basic holder. Remove the plug.
(2) Mount the connector at the chemical cleaning tube as shown in fig. 33.
(3) Push the tube into the spray unit connection at the basic holder and seal it with the nut.
(4) Pull the tube through the rubber cap and close the cap.
(5) Connect the other end of the tube at a pump or solenoid valve.
(6) The connections used for chemical cleaning should be checked frequently to prevent leakage.

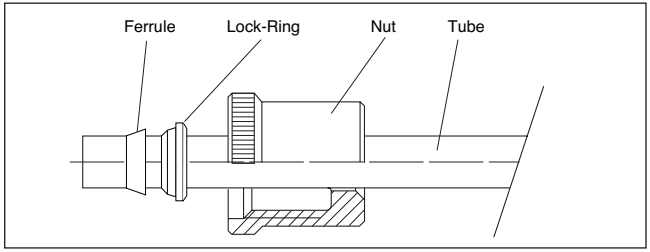

Figure 33. Connection of chemical cleaning/KCl tubing

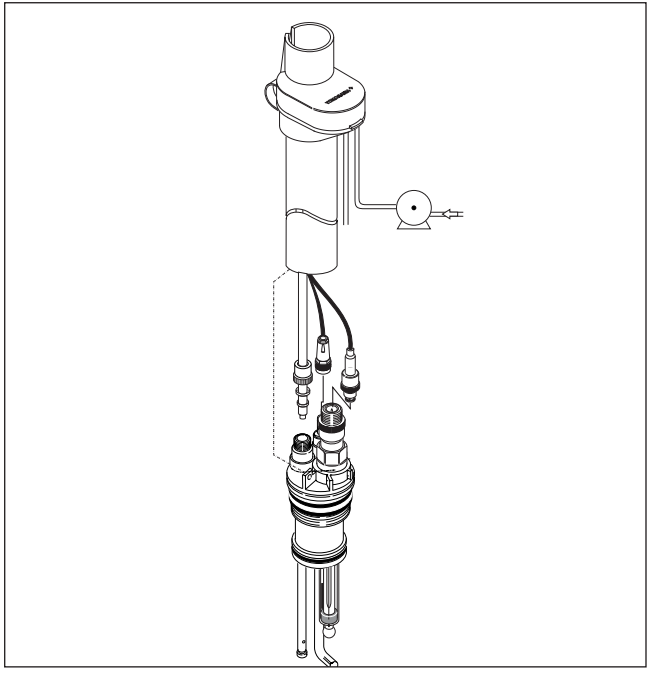

Figure 34. Connection of tubing to the basic holder

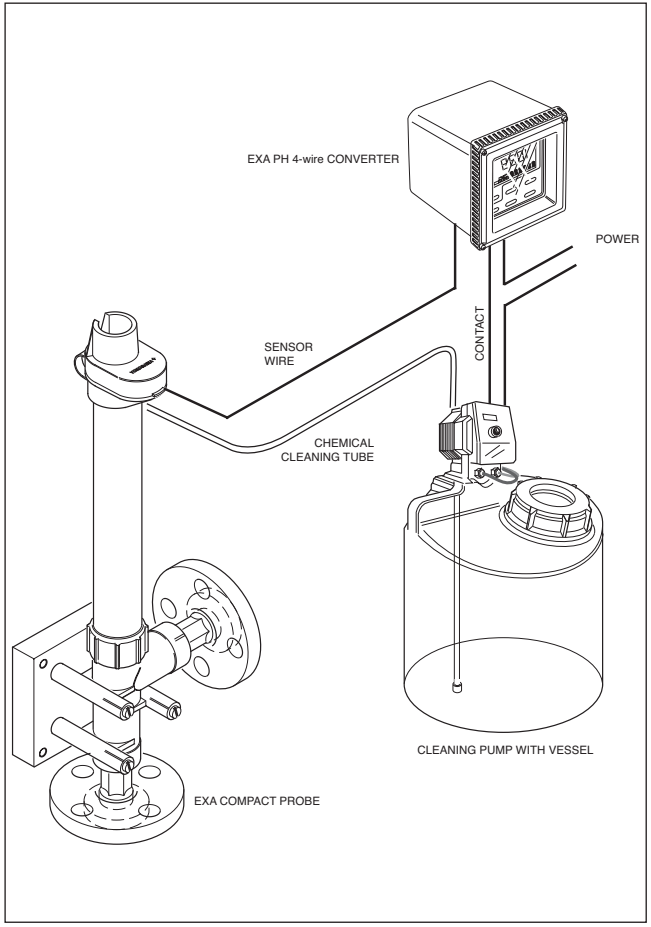

Figure 35. Cleaning setup

6. FLOW ELECTRODE WITH KCL RESERVOIR

6-1. Introduction

The flow combination electrode is connected to a KCl reservoir which supplies a positive flow of electrolyte, preventing penetration of process liquid into the electrode. This provides additional protection of the measurement against poisoning or fouling.

6-2. Mounting and maintenance (see fig. 33 and 36)

After the combination cable is connected onto the basic holder, the tube used for KCl (OD =$^1/_4$", l=0.55 or 1.55/2.55) can be mounted.

(1) Guide the tube through one of the outer holes of the rubber cap (see fig. 17, 26 or 32) and the protection hood or immersion tube towards the flow electrode.
(2) Mount the connector at the KCl tube as shown in fig. 33.
(3) Push the tube into the KCl connection at the flow electrode and seal it with the nut.
(4) Pull and stretch the tube at the rubber cap and close the cap.
(5) Connect the other end of the tube at the KCl reservoir which should be placed on the top of the rubber cap (see fig. 36). This causes a hydrostatic pressure on the KCl solution and therefore a positive outflow of KCl through the diaphragm of the electrode.
(6) Fill the KCl reservoir with 1mol. KCl solution by unscrewing the cover at the top. Check the KCl level regularly.

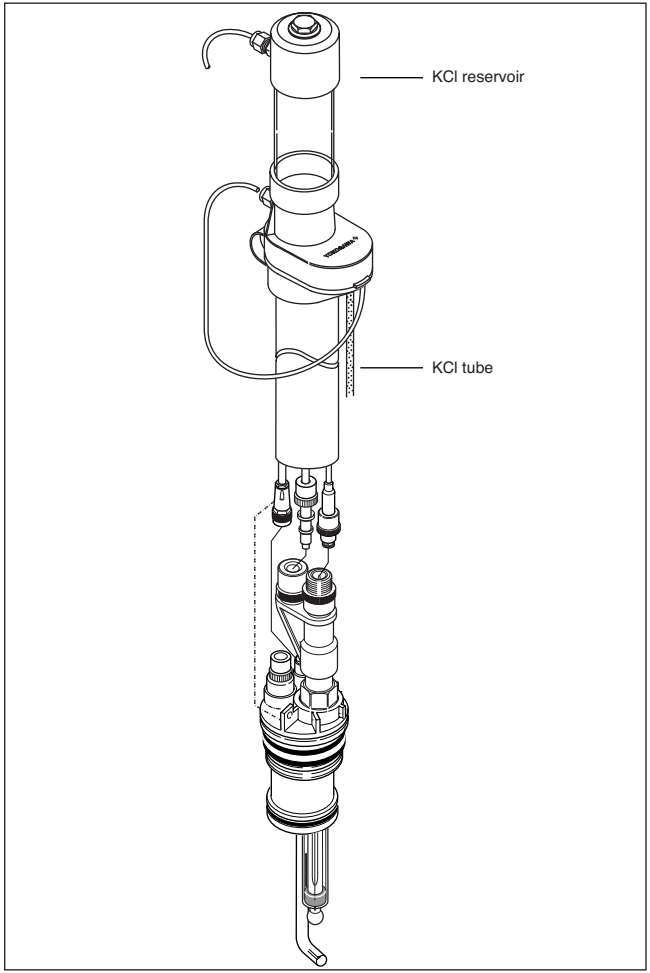

Figure 36. Connection of KCl tubing

YOKOGAWA ELECTRIC CORPORATION
World Headquarters
9-32, Nakacho 2-chome, Musashino-shi
Tokyo 180-8750
Japan
www.yokogawa.com

YOKOGAWA CORPORATION OF AMERICA
2 Dart Road
Newnan GA 30265
USA
www.yokogawa.com/us

YOKOGAWA EUROPE BV
Euroweg 2
3825 HD AMERSFOORT
The Netherlands
www.yokogawa.com/eu

YOKOGAWA ELECTRIC ASIA Pte. LTD.
5 Bedok South Road
Singapore 469270
Singapore
www.yokogawa.com/sg

YOKOGAWA CHINA CO. LTD.
3F Tower D Cartelo Crocodile Building
No.568 West Tianshan Road Changing District
Shanghai, China
www.yokogawa.com/cn

YOKOGAWA MIDDLE EAST B.S.C.(c)
P.O. Box 10070, Manama
Building 577, Road 2516, Busaiteen 225
Muharraq, Bahrain
www.yokogawa.com/bh

Yokogawa has an extensive sales and distribution network.
Please refer to the European website (www.yokogawa.com/eu) to contact your nearest representative.

YOKOGAWA

IM 12B6K4-01E-E
Subject to change without notice
Copyright ©

08-1402 (I) I
Printed in The Netherlands