Instruction Manual

Models UP30 and UP40 (Style B) Program Controllers Reference Manual

INTRODUCTION

This manual describes instructions for Model UP30 or UP40 Program Controller functions as a supplement of Operation Manuals to fully utilize the controller capability.

CONTENTS

YOKOGAWA
Yokogawa Electric Corporation

FD No. 1005Q (CID: 5789A)

IM 4P2F3-20E
1st Edition

1. SETTING ITEMS

1.1 Common Parameters (PC = 0)

These parameters are used commonly to controller operations in programmed control mode.

- **[WZ] Wait Zone**

When a PV enters into this wait zone (WZ) set as this parameter, at the end of one segment of an operating program, advancing to the next segment is allowed. (Setting range: EU (0.0%)S to EU (10.0%)S)

- **[WT] Wait Time**

In operations for which a wait zone is set, if the PV does not reach the wait zone readily, it may sometimes not be preferable not to have the program advance to the next segment.

Therefore, even if the PV does not reach the wait zone, the next segment program is forced to be executed after the wait time (WT) set as this item elapses. (Setting range: 0 to 100 min.)

- **[MR] Manual Reset Value**

In P or PD action control, a deviation cannot be always made zero. This deviation is called "offset". The offset can be eliminated by varying the manual reset value. (Setting range: −5.0 to 105.0%)

- **[CT] Cycle Time**

(Set only for relay output or voltage pulse output types.)

A period of ON and OFF transfers for relay outputs or voltage pulse outputs is called "cycle time".

Ratio (%) of ON time to a cycle time (CT) is proportional to the control output value (see the figure on the right side). Setting the cycle time shorter results in closer control. However, too short a cycle time leads to earlier end of relay contact lives. Thus, the cycle time is generally determined at about 10 to 30 seconds.
(Setting range: 1 to 100 seconds).

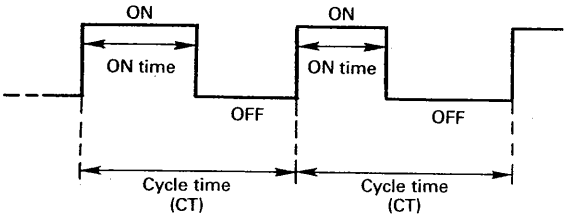

- **[TC] Tuning Code**

If auto tuning is to be intended for PID control parameters, what PID parameters are computed should be designated. The tuning codes include the following three representing each meaning as shown.

0: No auto tuning.
1: For processes likely to be hunting.
2: For general processes.

- **[STC] Start Code**

This code sets the program start point either to the zero point of the range or to the PV value at the start.
Refer to Note in Operation Manual Section 9.2 Program Pattern and subsection 10.2.1 Parameter Lists, Note 1.

- **[LC] Key Lock Code**

Refer to Operation Manual subsection 10.2.1 Parameter Lists, Note 2.

1.2 Control Parameters (PC = 1 to 8)

These parameters are the ones used for control in which PID parameters and output limiters are combined to sets.

Eight sets of PID No.1 to PID No.8 are provided.

Seven sets of them, PID No.1 to PID No.7, are used for each zone composed in zone table parameters (PC = 9) respectively. PID No.8 set consists of the subcontrol parameters superseding the main control parameters (No.1 to N0.7) when deviation exceeds the value set by reference DV (RDV), a zone table parameter.

- **[P] Proportional Band**

Proportional action (P action) refers to a control method to send out the control output proportional to deviation. In this case, the measured value (or deviation) changing width required to change the control output from 0 to 100% represented in (%) is called "proportional band".

When the measured value agrees with the setpoint, the output is 50% generally..

The proportional action can eliminate the ripples contained in the output, which is a shortcoming of the ON/OFF action.

(Setting range: 0.1 to 999.9%)

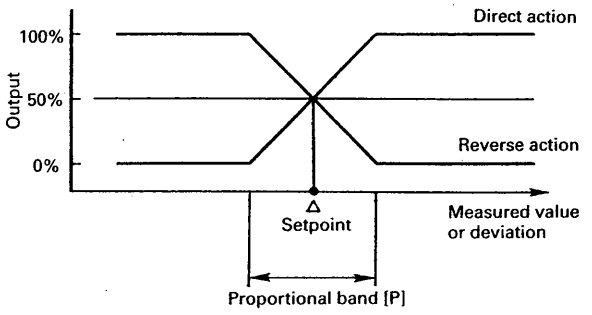

- **[I] Integral Time**

In P action, deviation may sometimes occur without agreement of measured value not always with the setpoint. A control method to give changes to the output as long as deviation exists to make the deviation automatically zero, is called "integral action" (I action).

In doing this, a value to determine the rate-of-change of the output corresponding to the deviation value is called "integral time". The shorter the integral time, the stronger the the integral action (larger rate-of-change of the output).

The I action is usually used as the PI action combined with P action, in which the time from the step input application to the instant when the output by P action only equals the output by I action only is the integral time [I].

(Setting range: 0 or 1 to 6000 seconds (0 means OFF))

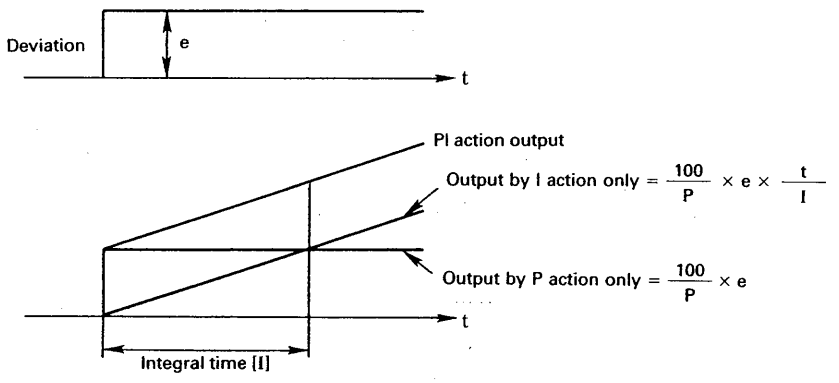

- **[D] Derivative Time**

If the time constant or dead time of a controlled system is relatively large, the response may be delayed or an overshoot may be generated to make the control system unstable if PI action only is used. In such a case, the derivative action (D action) should be employed, which gives the output proportional to the rate-of-change of the input (deviation) to make the response of the control system faster or to work the system stably.

The D action must be used as PD or PID action together with P or PI action.

In PD action, the time from the application of a ramp input (input with constant rate-of-change) to the instant when the output by P action only equals the output by D action only is called "derivative time" [D].

$$\text{Output by the P action only} = \frac{100}{P} \times K \times t$$

$$\text{Output by the D action only} = \frac{100}{P} \times K \times D$$

The longer the derivative time, the stronger the derivative action.
(Setting range: 0 or 1 to 6000 seconds (0 means OFF))

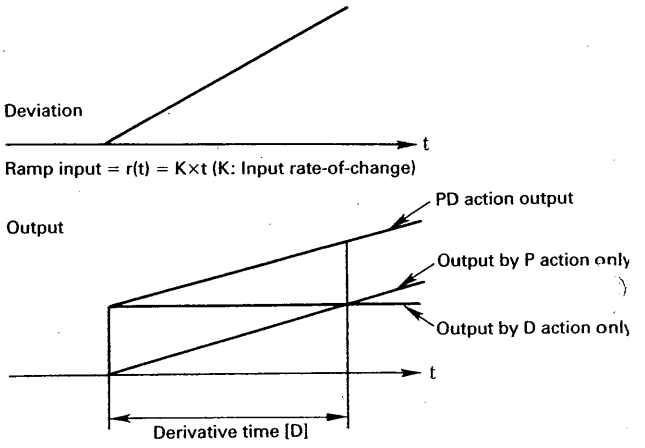

- **[OH] High Output Limit Value**

This parameter sets the high output limit value if the excess control output from the controller gives an adverse effect on the objective process. (Setting range: $-5.0\% \leqq OL < OH \leqq 105.0\%$)

- **[OL] Low Output Limit Value**

This parameter sets the low output limit value if too small an control output from the controller is not preferable. (Setting range: $-5.0\% \leqq OL < OH \leqq 105.0\%$)

1.3 Zone Table Parameters (PC = 9)

These are the parameters for designating reference points to change over PID sets in response to PV changes.

- **[RP] Reference Points**

This sets a PV at which a PID set is changed over.

PID No.1 set is used in the range PV < No.1 RP and is changed over to PID No.2 set when PV = No.1 RP. PID No.2 set is used in the range No.1 RP < PV < No.2 RP and is changed over to PID No.3 set at PV = No.2 RP, and so on. PID No.7 set is used in the range No.6 RP < PV.

There are hysteresis widths (EU(0.5%)S: Fixed) at PID set change-over points as shown on the right side.
(Setting range: EU(0%) to EU(100%))

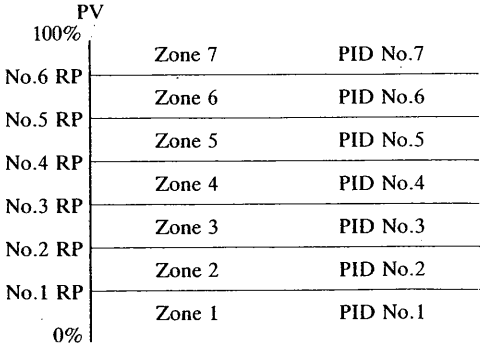

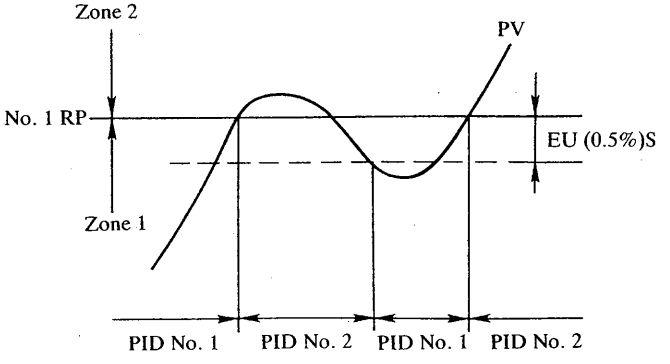

- **[RDV] Reference DV**

This is the deviation when main control parameters (PID No.1 to PID N0.7) are changed over to the subcontrol parameters.

When |Deviation| > RDV, the subcontrol parameters are used.

For RDV = 0 (OFF), change-over to the subcontrol parameters is not carried out.

Change-over from the main control parameters to the subcontrol parameters is performed as shown on the right side.

(Setting range: EU(0%)S to EU(100%)S (0 means OFF))

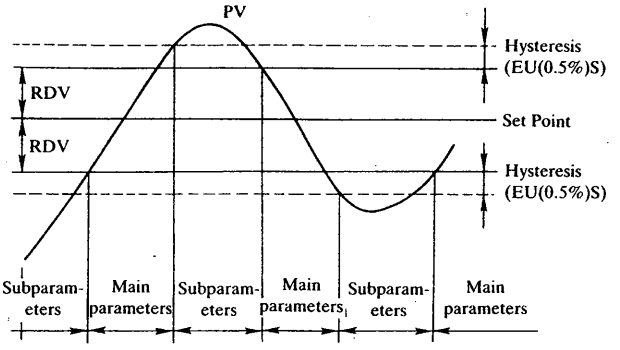

1.4 Ranging Parameters (PC = 10)

These parameters are used for setting when the linear scaling of measuring range and input is performed.

Cautions for Setting Ranging Parameters

If the controller is shipped with the specified measuring range set in advance, the set ranging parameters are locked (see File Lock Code).

When setting of the measuring range code, linear range high limit, linear range low limit or temperature display unit code is changed, all the items of wait zone (in common parameters (PC=0)), zone table parameters (PC = 9) and setup parameters (PC = 20) are initialized (to values set on factory shipment).

- **[U0] Measuring Range Code**

Relation of input types to model number codes, measuring range codes, and values on factory shipment is shown on the right side.

Input Type	Model Code	Measuring Range Code	Value Set on Shipment
Thermocouple	UP30-1□□ UP40-1□□	100 to 180	131*
DC Voltage		000 to 011 (020 to 040 for using DCV)	
DC Current		050	
RTDs	UP30-2□□ UP40-2□□	200 to 215	201*

* When the range is specified using /F□□□, those values are set on shipment. These takes the values specified.

- **[U1] Linear Range Decimal Point**

This parameter determines the decimal point position of numeric values when scaling of linear inputs is implemented. The decimal point positions that can be specified corresponds to parameter codes as shown right side.

0: −1999 to 9999
1: −199.9 to 999.9
2: −19.99 to 99.99
3: −1.999 to 9.999

- **[U2] Linear Range High Limit Value, [U3] Linear Range Low Limit Value**

These set the high and low limit of numeric values when linear input scaling is carried out.
(Setting range: $-1999 \leqq U3 < U2 \leqq 9999$)

- **[U5] Temperature Display Unit Code**

The following is selected for designation.

0: °C
1: °F
2: None (can be set only for linear scaling)

1.5 Setup Parameters (PC = 20)

- **[E0] PV Input Compensation**

This displays the "PV input value + Corrected value" as the PV input value and has the controller take a control action by setting the corrected value for difference between the internal temperature of a furnace and the temperature at the sensor position if this difference is observed in the furnace to be controlled.
(Setting range: EU (−5%)S to EU (5%)S)

[As an example, assume that
- Furnace temperature (T1): 1000°C
- Measured temperature at the sensor position (T2): 993°C
- Range (full scale): −200 to 1200°C.

then E0 = 7°C.]

- **[E2] Output Velocity (rate-of-change) Limit**

This is used for the case where rapid output change must be suppressed in consideration of preventing impact to a process or final control element.

It limits the rate-of-change of the output by setting the maximum permissible rate-of-change.

For example, if the time required for 0 to 100% change of the output is to be set to 20 seconds or more, set the limit to 100%/20 sec. = 5%/second. (Setting range: 0 or 1 to 100%/s (0 means OFF))

Since, if the output velocity limit is applied, it may affect derivative actions, use it after checking controllability of the system.

- **[E3] High Limit of Setting, [E4] Low Limit of Setting**

These specify the range of TSP setting to a program pattern by key-in operation. The low limit setting value is the start point of a program pattern.

(Setting range: EU (0%) ≦ E4 < E3 ≦ EU (100%))

If the following is assumed as an example,
- E3: −60°C
- E4: 1060°C
- Range (full scale): −200 to 1200°C,

The relation shown on the right side applies.

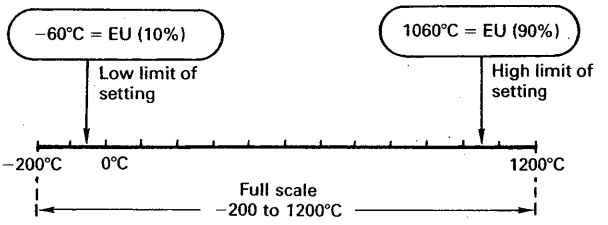

- **[E7] PV Input Filter**

This is used for the case where the indicated value varies due to large input noises contained in measured inputs.

This filter is of low pass filter type based on first order lag. Its time constant can freely be set in the following range. The larger the time constant, the greater the noise rejection capability. (Setting range: 0 or 1 to 120 (0 means OFF))

- **[F0] Preset Output**

This allows setting of the fixed output value at the time of PV input burn out action (in automatic operation) and operation stopping in advance. (Setting range: −5.0 to 105.0%)

- **[F1] Event Gap**

This designates the hysteresis width for event detecting action to prevent PV event signal chattering.
(Setting range: EU (0.0%)S to EU (5.0%)S)

(The figure on the right side shows an example of PV high limit. Therefore, the event gap is provided under the setpoint. This relation is reversed for low limit alarm.)

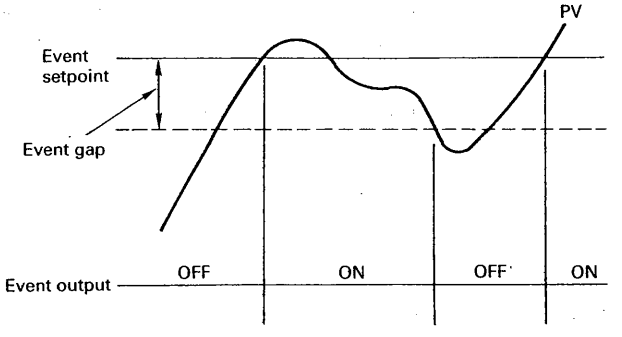

- **[Y1] Transmission Output Selection (only for designating optional code /RET)**

This designates the transmission output value with any one of PV, setpoint (SP), or output value (OUT).

0: Measured value (PV)
1: Setpoint (SP)
2: Output value (OUT)
} *1

3: Measured value (PV)
4: Setpoint (SP)
} *2

*1: The output is given in the form of 4 to 20 mA DC corresponding to span 0 to 100%.

*2: The output is given in the form of 4 to 20 mA DC corresponding to the span of the low limit of setting (E4) to the high limit of setting (E3) (mainly used as the transmission output to a recorder).

- **[Y2] Direct/Reverse Action**

A control action in which the control output decreases when the deviation (= PV−SP) is positive is called the reverse action, while the action in which the control output increases when the deviation is positive is called the direct action.

0: Reverse action
1: Direct action

- **[Y3] Restart Mode**

This designates the operation mode when the system recovers from the power failure. The default setting is "succession of the status before power interruption".

0: Succession of the status before power interruption
1: Manual Operation
2: Reset

In addition, for temporary power failure of about 5 seconds or less, the restart mode is always "succeeding the status before power failure".

- **[C0] Baud Rate, [C1] Parity**
- **[C2] Stop Bit + Transmision Bit Length, [C3] Communication Address**

} (Only for designation of optional /RS-422)

These are set when communication is to be implemented with a personal computer or the like.

For these parameters, refer to the separate Instruction Manual for RS-422 Interface for UT30, UT40, UP30 or UP40 Communications.

1.6 File Lock Code (PC = Password)

A function to enable each setpoint to be displayed but disable the setpoints to be updated by key operation is referred to "file lock". First begin with setting the pass word by a dip switch (the pass word is 100 if it is not set).

CAUTION

For setting the file lock, the work to draw out the internal assembly. After turning off power, draw out the internal assembly.

Display Example and Switch	Operation
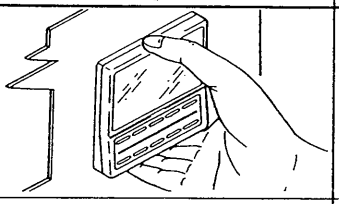	Draw out the internal assembly. The stopper is located at the bottom of the bezel. Hold the whole bezel with a hand pressing the stopper and pull forward.
DIP switch 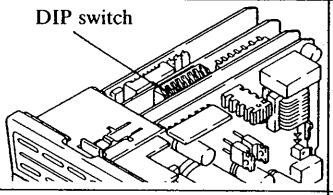	Turn the internal assembly upside down. Find a DIP switch mounted.
Use subswitches 1 to 6 of the DIP switch. 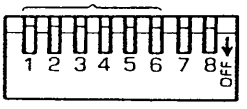	Set each subswitch to either ON or OFF position. Use the subswitches 1 to 6 of the DIP switch. Relationship between each subswitch no. and set values are as shown below. **Note:**Do not operate subswitches 7 and 8. **Switch No.** 1 2 3 4 5 6 ON 0 0 0 0 0 0 OFF 1 2 4 8 16 32
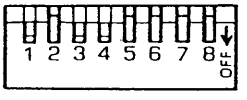	Set the pass word. The figure to the left is an example in which the pass word is set to 113. (Pass word =100+set value) Since numeric values settable with the DIP switch are 0 to 63, the pass word can be set in the range 100 to 163 (both inclusive).
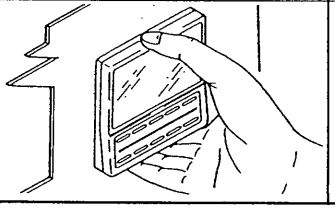	Restore the internal assembly and turn ON power.

The following parameters are locked by keying in the corresponding codes.

FL Code	Parameters to be Locked
0	None
1	Ranging parameters (PC = 10)
2	Ranging parameters (PC = 10) Setup parameters (PC = 20)

CAUTION

If FL = 0 is set when reset, IC = 0 is displayed.

In this case, be sure to return the screen to the initial display by DISP key.

Do not use IC codes because they are the instruction codes used for factory adjustment.

2. PROGRAM PATTERN SETTING

The numbers of program patters and program segments which Models UP30 and UP40 can store and hold at a time are as follows:

	Number of Program Patterns	Number of Program Segments
UP30	19	200
UP40	99	400

The fact which must be noticed is that the total number of set segments must be the number of program segments or less (in addition, the maximum number of segments that can be set to one program pattern is limited to 99).

For instance, in the UP30, if 99 segments are assigned to one program pattern, 101 segments must be allocated to remaining 18 patterns for setting.

- **Traverse Function**

The structure of the program file is as shown in Figure 2.1.

Moving each setting item between segments can be done using FILE and RVS keys. Moving setting items sequentially in segments can be done using ITEM and RVS keys.

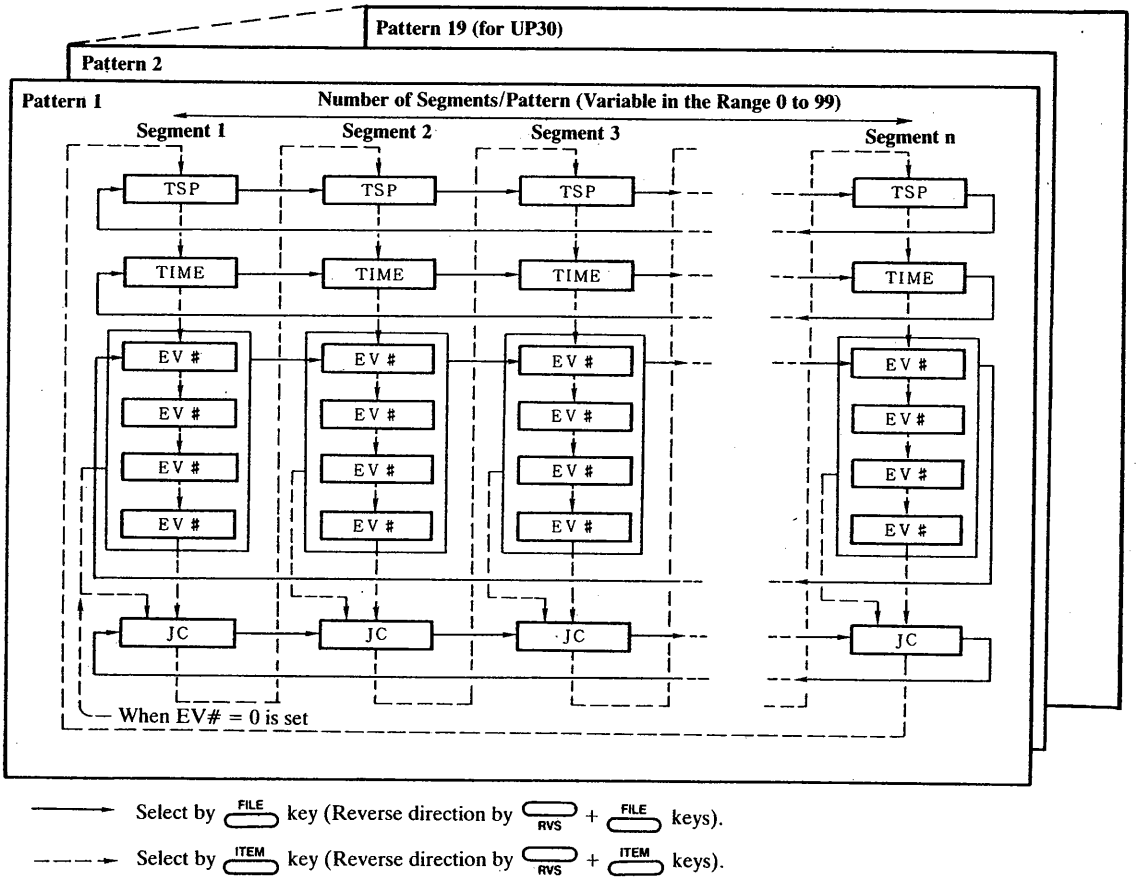

Figure 2.1 Program File Structure

2.1 Erasion of Program Pattern

- **Erasion**

A program pattern can be erased if it becomes unnecessary.

Erasing Procedure

(1) Place the system in the reset status.

(2) Call the setting display for program pattern No. and operation start segment No. by FILE key.

(3) Set as shown below.

```
PTN*SEG No.
No. =00*99?
```

Enter this by ENT key.

(4) Designate a program pattern No. to be erased using the data setting key and RVS key.

```
ERASE PTN
No. =      3?
```

Example: Pattern 3

Then press ENT key to execute erasion.

(After execution, the screen returns to Operation Display (Initial Display.)

2.2 Copying of Program Pattern

A program pattern can be copied over another program pattern.

Copying Procedure

(1) Place the system in the reset status.

(2) Call the setting display for program pattern No. and operation start segment No. by RVS key.

(3) Set as shown below.

```
PTN*SEG No.
No. =00*11?
```

Enter this by ENT key.

(4) Designate the source program pattern No. to be copied using the data setting keys and RVS key.

```
SOURCE PTN
No. =      2?
```

Example: Pattern 2

Then press ENT key.

(5) Designate the destination program pattern No. over which the above pattern is to be copied.

```
NEW PTN
No. =      4?
```

Then press ENT key to execute copying.

(After execution, the screen returns to Operation Display (Initial Display.)

2.3 Erasion of Program Segment

A specific segment within a program pattern can be erased.

Relations of segments before erasion to those after erasion will be described next.

The junction code 9 (JC = 9) is used for erasing a program segment.

① **Example of Program Pattern (Before Erasing a Program Segment)**

Segment No.	1	2	3	4	5
TSP °C	400	600	600	400	0
Segment time min.	20	30	20	10	20
Event					
Junction code	0	1	0	0	0

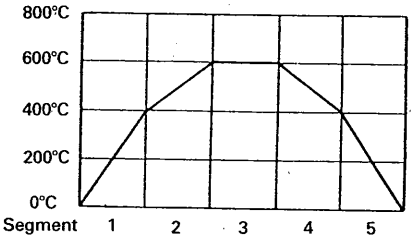

Erasing Procedure

(1) Place the system in the reset status.

(2) Call the junction code for a segment to be erased (in this example, No.3 segment).

(3) Set the JC = 9 by pressing ▲ key and then press ENT key.

(4) Confirm that the segment has been erased.

② **Example of Program Pattern (After Erasing Program Segment)**

[No.3 segment has been erased in the program pattern ①.]

Segment No.	1	2	3←4	4←5
TSP °C	400	600	400	0
Segment time min.	20	30	10	20
Event				
Junction code	0	1	0	0

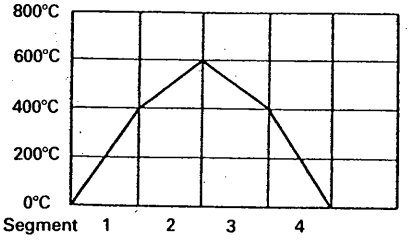

After a segment is erased, the subsequent segment nos. are carried up.

2.4 Insertion of Program Segment

A segment within a program pattern can be inserted for addition.

Relations of segments before insertion to those after insertion will be described next.

The junction code 8 (JC = 8) is used for inserting a program segment.

① **Example of Program Pattern (Before Inserting Program Segment)**

Segment No.	1	2	3	4
TSP °C	400	600	400	0
Segment time min.	20	30	10	20
Event				
Junction code	0	1	0	0

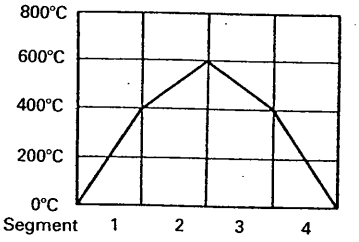

Insertion Procedure

(1) Place the system in the reset status.

(2) Call the junction code for a segment to be erased (in this example, No.3 segment).

(3) Set the JC = 8 by pressing ▲ key and then press ENT key.

(4) Confirm that the segment has been inserted.

② **Example of Program Pattern (After Inserting Program Segment)**

[No.3 segment data in the program pattern ① is pushed out to No.4 segment and the old No. data remains in the new No.3 segment.]

Segment No.	1	2	3	3→4	4→5
TSP °C	400	600	600	400	0
Segment time min.	20	30	20	10	20
Event					
Junction code	0	1	0	0	0

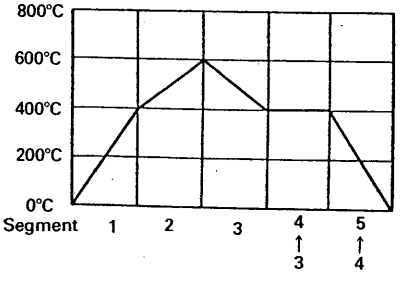

After a segment is inserted, the subsequent segments nos. are carried down.

3. PROGRAM OPERATION STARTUP

3.1 Starting Point When Program Operation is to be Implemented

The starting point for program operation should be designated by the start code (STC) in the common parameters (PC = 0).

The start code includes two kinds which are to be selected according to the set values (see the table below).

Table 3.1 Start Code

STC Code	Contents
0	Designates the zero point in PV input range (if the low setpoint limit (E4) is set, use this value) to the program starting point.
1	Designates the PV input value at the start to the program starting point.

3.1.1 Selection of Start Code: 0 (STC = 0, Zero start)

When the program operation starts, the target setpoint changes from TSP0 to TSP1 with a gradient of (TSP1–TSP0)/TIME1, (EU/min). Time event goes to ON status when the time for EVA elapses after starting operation and then goes to OFF status after the time for EVB elapses.

*1 TSP0

Target setpoint for the segment to reach precedent to the program operation start, when the program starts at the second or succeeding segment

For starting at No.1 segment, this value is EU (0%) or the low limit of setting (E4).

*2 TSP1

Target setpoint to be reached of the program operation start segment

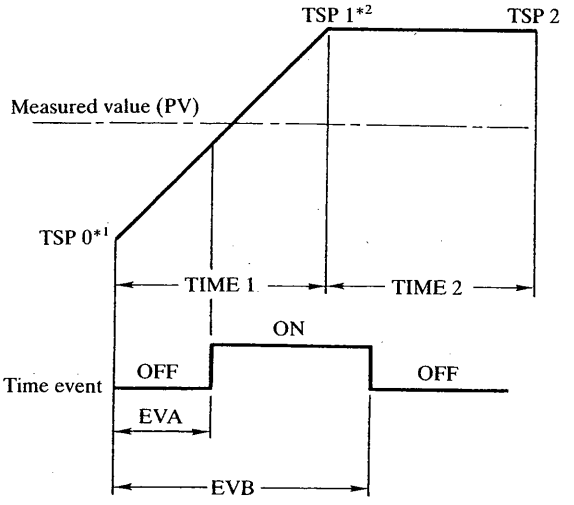

Figure 3.1

3.1.2 Selection of Start Code: 1 (STC = 1, PV start)

(1) When the segment has an ascending gradient from operation start:

① For TSP0 ≦ Measured value (PV) ≦ TSP1;

When the program operation starts, the target setpoint (SP) changes from the measured value (PV) to TSP1 with a gradient of (TSP1–TSP0)/TIME1, (EU/min).

In this case, the segment time is regarded to have been passed by T_0 (min) and thus the remaining time is (TIME1–T_0).

The time event is generated at the same point on the program pattern regardless of zero start or PV start. As in this example, the time event may become ON at the start point.

*3 T_0:

Time interval during which the target setpoint (SP) reaches the measured value (PV) starting at TSP0 when the SP changes with a gradient of (TSP1–TSP0)/TIME1 (EU/min).

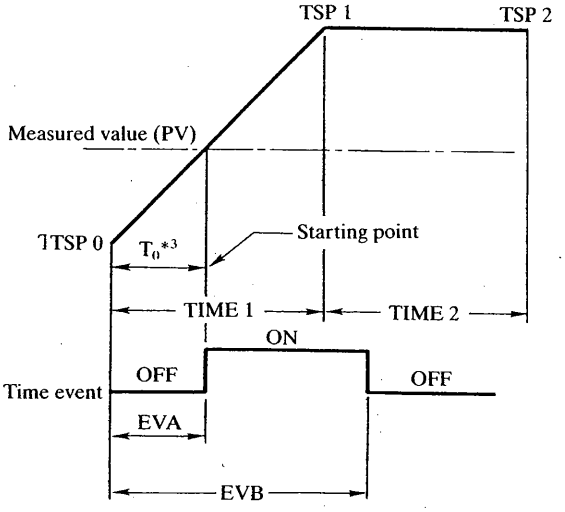

Figure 3.2

② For Measured value (PV) >TSP1 ;
When the program operation starts, the program starts at the segment subsequent to the operation start segment.
For time event, the same status as that in ① applies.

③ For Measured value (PV) <TSP0;
The program starts at TSP0 when the program operation starts. that is, it is the same as zero start (STC = 0).
For time event, the same status as that in ① applies.

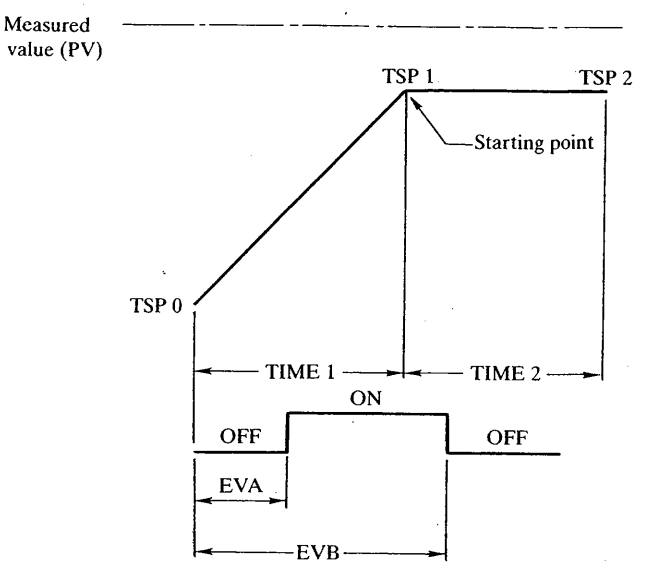

Figure 3.3

(2) When the operation start segment has a descending gradient:

① For TSP0 ≧ Measured value (PV) ≧TSP1 ;
The program starts at the time when the measured value (PV) = target setpoint (SP) in the operation start segment.

② For Measured value (PV) >TSP0 ;
The program starts at the beginning of the operation start segment.

③ For Measured value <TSP1 ;
The program starts at the the segment subsequent to the operation start segment.

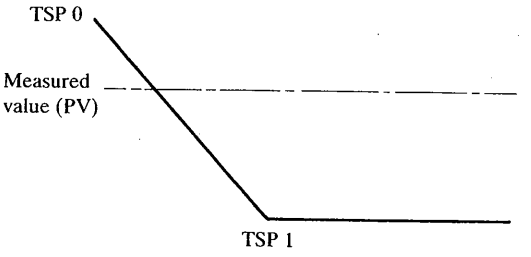

Figure 3.4

4. WAIT ACTION

Each segment in a program pattern is connected to the next with a junction (JC) code located at the end of each segment. When JC = 0 is specified, the program moves to the next segment immediately after the current segment is completed.

On the contrary, if JC = 1 is specified, the program moves to the next segment after the difference between the setpoint and the measured input value reaches within a certain value (wait zone: WZ) at the end of the current segment.

This is a function mainly employed when the program moves from the temperature rising segment (called "ramp segment") to the constant temperature segment (called "soak segment") for ensuring the period when temperature is constant in a soak segment.

However, too long a wait time may give an adverse effect. Thus, it is designed that the program moves to the next segment after a certain time elapses (constant, Wait Time WT) even if the difference between the setpoint and measured input value does not reach the wait zone.

Wait Zone (EZ) and Wait Time (WT) are each one of the common parameters (PC = 0).

Although the Wait Time exists, the time event setting time operates as if there were no waiting time.

In the segment where the segment time is set to 0 minute, the wait function does not operate.

(Example 1)

PV reaches the wait zone and proceeds to the next segment t minutes after beginning the wait action (within the wait time).

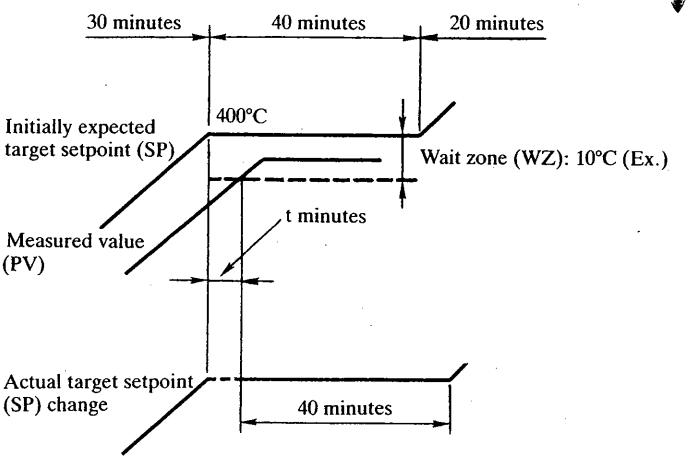

(Example 2)

The program proceeds to the next segment because the measured value (PV) does not reach the wait zone even if 30 minutes elapses since beginning the wait action.

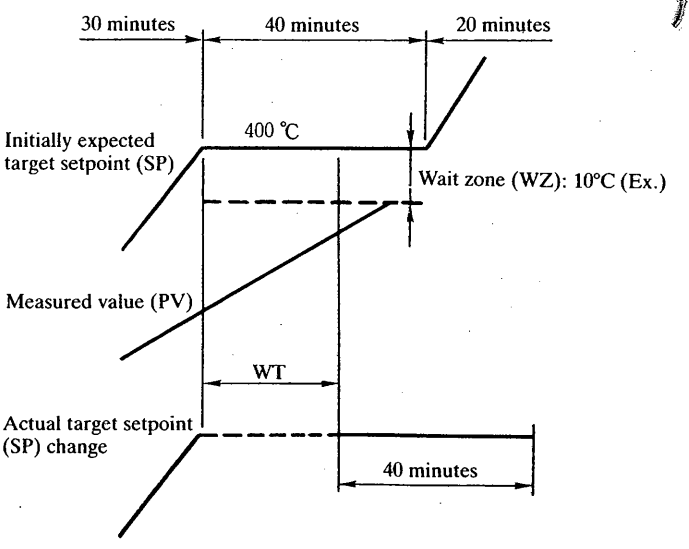

5. REMOTE CONTROL SIGNAL AND STATUS SIGNAL

5.1 Remote Control Signal (Volt-free Contact)

This signal is used for changing the status of the UP30 or UP40 and controlling the UP40 operation program externally. The remote control contact signal should be obtained by closing the contact for two seconds or more using the volt free contact.

- **RUN (Operation)**
  Used when RESET is transferred to RUN or HOLD is transferred to RUN. (Both in UP30 and UP40)
- **RESET**
  Used when RUN or HOLD is transferred to RESET. (Both in UP30 and UP40)
- **HOLD**
  Used when RUN is transferred to HOLD. (Both in UP30 and UP40)
- **ADV (Advance)**
  Used for advancing the program under execution by one segment. (In UP40 only)
- **PTN SET (Pattern set)**
  Used for reading the pattern No. set by designating the pattern No.
  Reads it only in reset status. (In UP40 only)
- **PTN A, PTN B, PTN C, PTN D (Pattern No. designation)**
  Sets pattern numbers 1 to 15 in binary codes of 1, 2, 4, and 8 (A, B, C, and D). (In UP40 only)

- **Remote Control Signal Connection Examples**

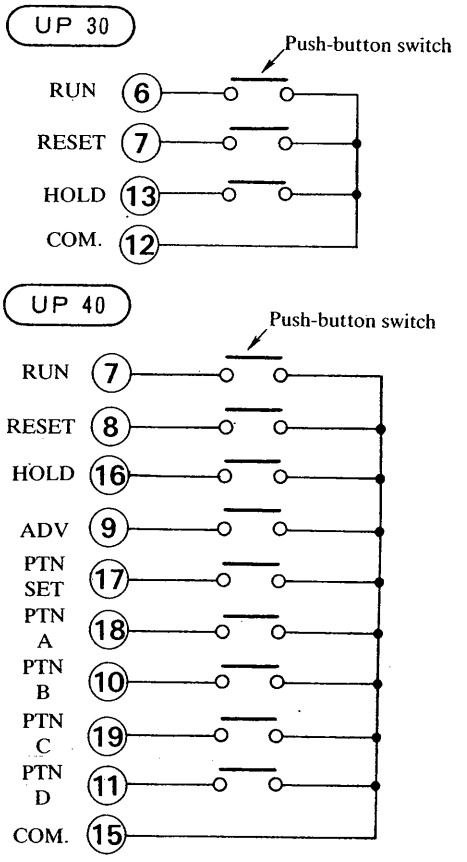

Note: the load for each contact is 24V DC, 50 mA or less.

5.2 Status Signal (Transistor Open Collector Output, 24 V DC, 50 mA or less)

Used for informing the UP30 or UP40 status to the outside.

- **RUN-HOLD (Operation-Hold)**
  The output is ON during operation or holding. The output is OFF during RESET. This can also be used as a pattern end signal. (In UP30 only)
- **RUN (Operation)**
  The output is ON during operation (including holding). The output is OFF during RESET. This can also be used as a pattern end signal. (In UP40 only)
- **HOLD**
  The output is ON during holding. (In UP40 only)
- **ANS (Answer)**
  The output is ON for one second when a remote control signal is received. (In UP40 only)

- **Status Signal Connection Examples**

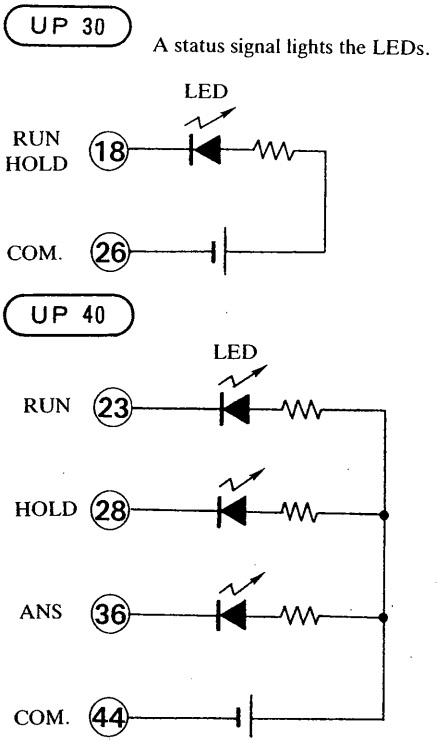

5.3 Example of Operation by Remote Control Signal

This section describes that UP30 or UP40 controller changes its status or that UP40 controller varies its operation program by remote control signals.

5.3.1 UP30 Controller

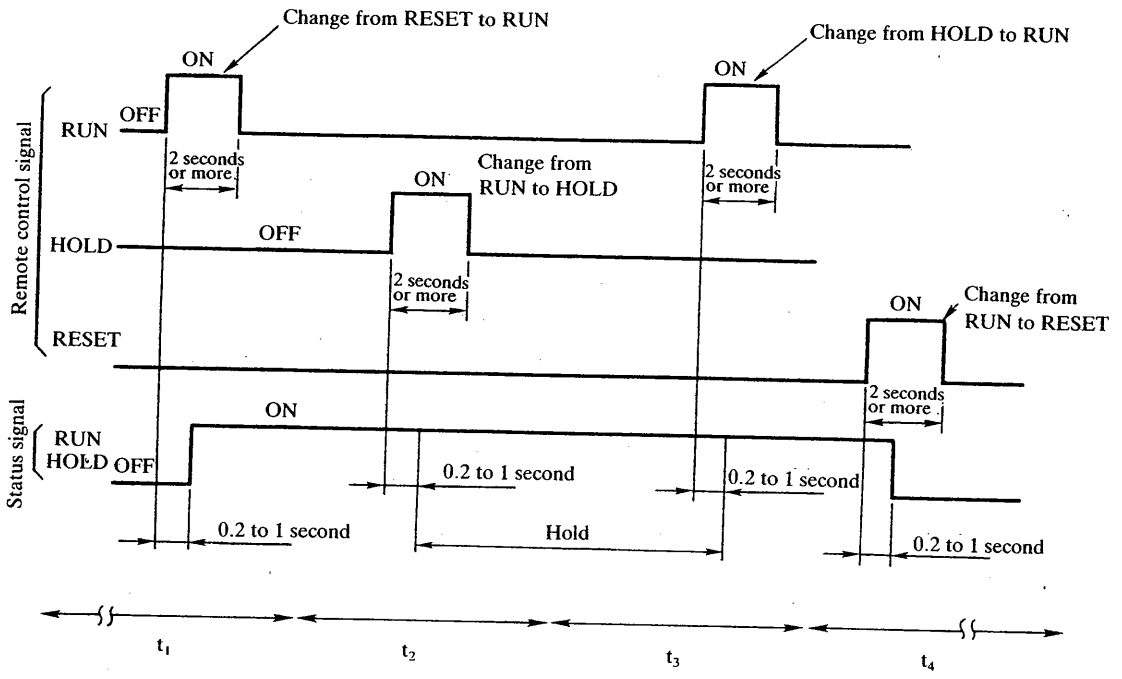

t_1: The contact is closed for two seconds or more to change the status from RESET to RUN by a RUN signal. The UP30 status is changed to operation state and the status signal (RUN-HOLD) is changed to ON.

t_2: The HOLD signal is changed to ON to obtain HOLD status from the operating status (closing the contact for two seconds or more). The UP30 status is changed to HOLD and the status signal (RUN-HOLD) continues to be ON.

t_3: The HOLD status is changed to the operating status by RUN signal (closing the contact for two seconds or more). The status signal (RUN-HOLD) continues to be ON.

t_4: The operating status is changed to the RESET status by the RESET signal (closing the contact for two seconds or more).

The UP30 has been changed to RESET status, so that the status signal (RUN-HOLD) is changed to OFF.

5.3.2 UP40 Controller

(1) Status Change

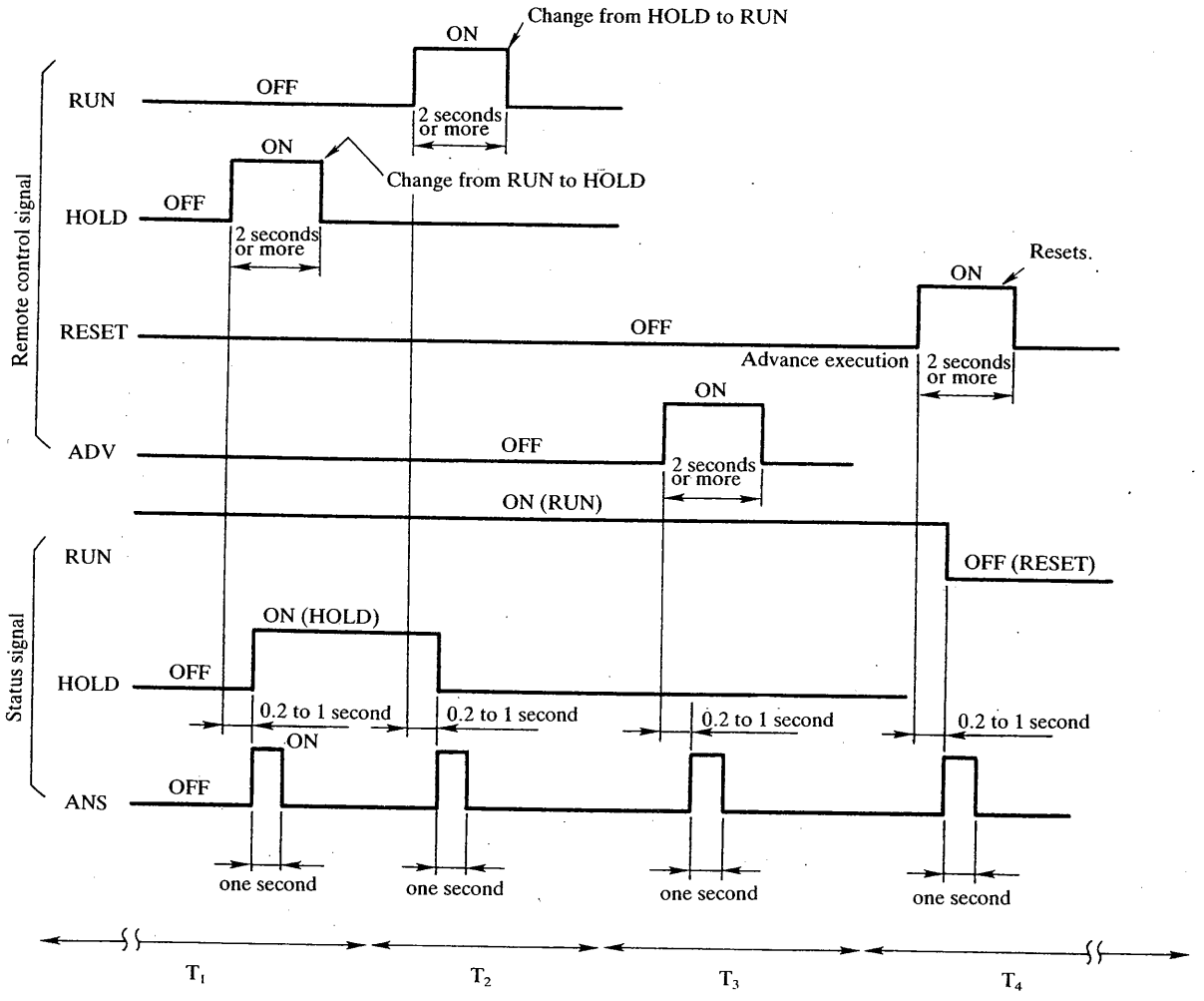

T_1: The contact is closed for two seconds or more to obtain HOLD status by HOLD signal during the UP40 operation. The UP40 is changed to HOLD status and the status signal (HOLD) and answer signal (ANS) are changed to ON. The ANS signal continues ON status for one second and then goes to OFF. (RUN signal continues ON status.)

T_2: The HOLD status is changed to operating status (RUN) by RUN signal.
The UP40, once changed to the operating status, turns the status signal ANS ON and again turn it OFF after one second.
HOLD signal is changed to OFF.
RUN signal continues to be ON.

T_3: ADV (advance) signal advances the program progress by one segment (closing the contact for two seconds or more). The status signal ANS is turned OFF following execution of ADVance and turned OFF after one second.

T_4: The operating status is changed to RESET status by RESET signal (closing the contact for two seconds or more). The status signal ANS is turned OFF following execution of the change to RESET status and turned OFF after one second.
The status signal (RUN) is turned OFF because of RESET status.

(2) Program Pattern Setting

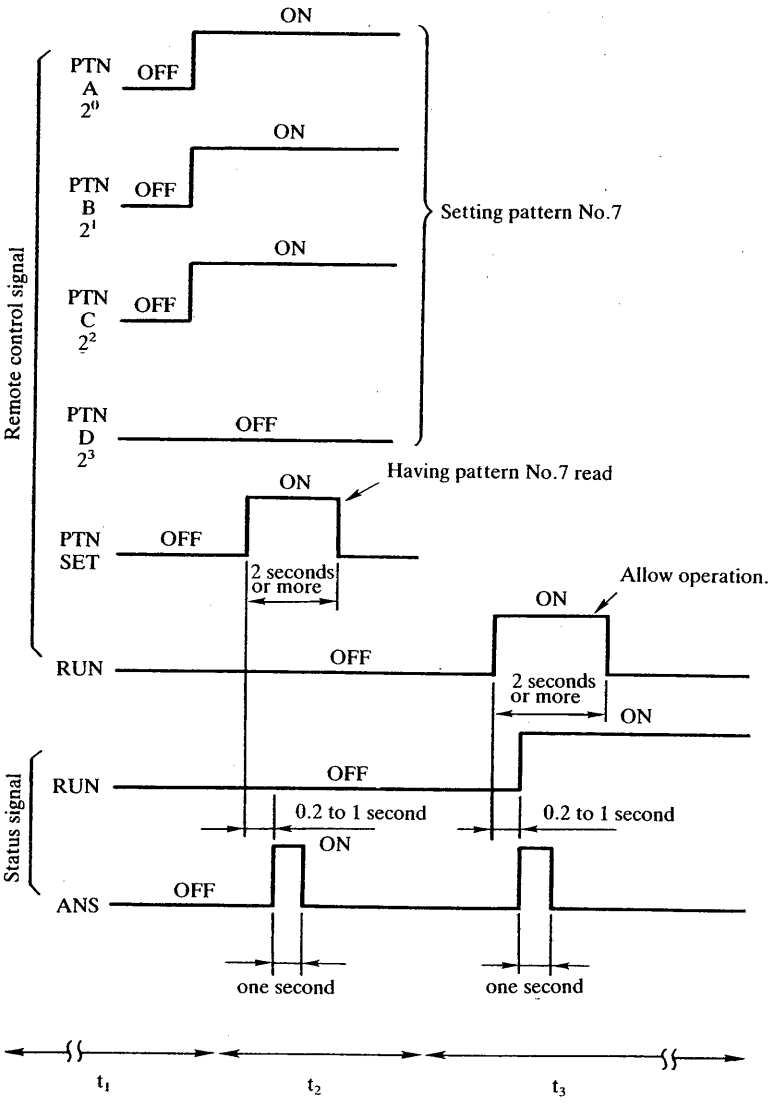

t_1: Pattern No. is set by pattern setting signals PTN A, PTN B, PTN C, and PTN D (the example shows to set pattern No.7).

t_2: The pattern set (PTN SET) signal is turned ON to read Pattern No.7.
As a result of reading pattern No.7, the UP40 outputs the status signal ANS (answer)(output is ON for one second).

t_3: RUN signal is turned ON to execute the program operation (closing the contact for two seconds or more).
The UP40 becomes the operating status and outputs the status signal ANS (output is ON for one second).

6. AUTO TUNING

Auto Tuning is a function by which this controller measures the process characteristics and computes and automatically sets the optimum PID parameters for the setpoint.

If auto tuning function is executed to measure the process characteristics, the controller becomes temporarily an ON/OFF controller and repeats to change alternately the output to 0% and 100% (or to the low output limit value (OL) and the high output limit value (OH)).*

In this case, the controller computes the optimum PID parameters by the period, amplitude, duty factor (ON time/period) of the limit cycle produced in the process.

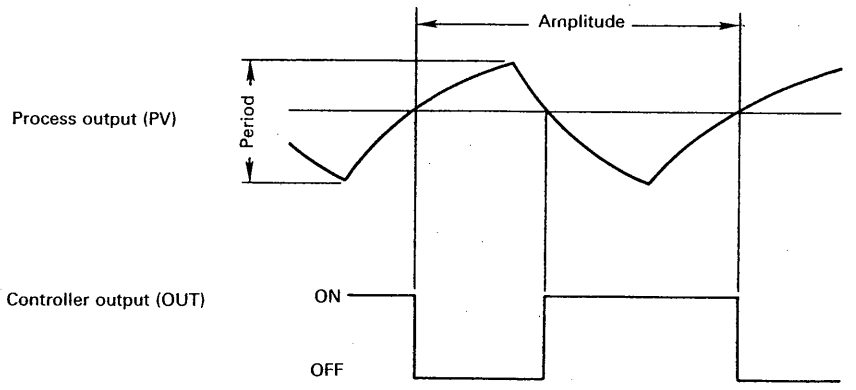

This is called the limit cycle method which has features of surely grasping the process characteristics and of short auto tuning time required.

However, because of its being temporary ON/OFF controller, the controller may possibly generate some troubles in the following processes. Therefore, carefully implement the auto tuning function.

(1) Processes in which a large stress is applied to final control elements due to the ON/OFF outputs from the controller.

(2) Processes such as for heat treatment or food processing, which give adverse effects on the product quality as a result due to process variable change depending on the ON/OFF outputs from the controller.

(3) Processes whose characteristics are not suitable for ON/OFF control due to faster response (shorter process time constant) such as in flow or pressure control.

In addition, this controller can implement two types of PID parameters considering process characteristics by designation of a tuning code (TC). (The value set on shipment from the factory is TC=2.)

TC	Tuning
0	No auto tuning.
1	For processes likely to be hunting.
2	For general processes.

*For time proportional output (relay or voltage pulse output), the controller repeats to output the 0% and 100% values of the range regardless of the output limits.

Note 1: The status in which auto tuning action can be done is that the controller is executing the program operation. Therefore, if auto tuning is executed, the PID setpoints for PID No. currently used are updated at that instant.

Note 2: If auto tuning action is to be aborted, press RVS key while pressing DISP key. Then the auto tuning function is aborted and the display returns to Operation Display.
If auto tuning is aborted, PID setpoints are not updated (the existing setpoint remains). Those values cannot also be changed by key-in operation or communication (RS-422A) during auto tuning.

Note 3: During auto tuning action, program progress is temporarily stopped.

When auto tuning is terminated, the program again starts advancing automatically. The time event set time is compensated for auto tuning period.

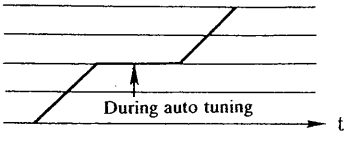

[If the hold status is not specifically given with MODE key, the HOLD lamp is not lit even if program progress is halted.]

7. SPECIFICATIONS FOR UP30 and UP40 CONTROLLERS

7.1 Standard Specifications

7.1.1 Input

Input Signal: Multi-range signal system (selectable within each measuring input group)
For input types (ranges) and measuring range codes, see Operation Manual Tables 10.1 and 10.2.
Input Sampling Period: 100 ms
Input Resistance:
Thermocouple input: 1 MΩ or more
Voltage input: 1 MΩ or more
Current input: 250 Ω
Permissible Signal Source Resistance:
Thermocouple input: 250 Ω or less
Voltage input: 2 kΩ or less
Permissible Leadwire Resistance: RTD input: 10 Ω or less/wire
Permissible Input Voltage:
Thermocouple, voltage or current input: ±10 V DC or less
Noise Rejection Ratio:
Normal mode: 60 dB (50/60 Hz)
Common mode: 140 dB (50/60 Hz)
Filter: 0 or 1 to 120 s (first order lag, 0 = OFF)
Measuring Input Compensation: ±5%
Thermocouple Standards: JIS C1602/IEC584/ANSI MC96.1/DIN43710 (Types U and L)
RTD Standards: JIS C1604/IEC751/DIN43760

7.1.2 Display Function

Display:
Fluorescent matrix analog display and six LED indicator lamps (UP30), or
4-digit 7-segment digital LED display, fluorescent matrix analog display, and six LED indicator lamps (UP40)
Data displayed: Measured value, deviation or setpoint, program segment remaining time, program pattern segment nos., program pattern (graphic display), output values (digits and bargraph), parameters, etc. (Operation displays and parameter setting displays)

7.1.3 Measuring Accuracy

Input Type		Accuracy
Thrrmo-couple (JIS, ANSI)	R, S, B*1	±0.15% of F.S. ±1 digit
	K, E, J L (DIN), T*2 U (DIN)*2, N	±0.1% of F.S. ±1 digit
	W	±0.15% of F.S. ±1 digit
RTD (JIS)	Pt 100Ω*3	±0.1% of F.S. ±1 digit
Voltage	mV*4 DC	±0.1% of F.S. ±1 digit
Current	4 to 20 mA DC	±0.1% of F.S. ±1 digit

Digit is the minimum unit of display.

*1: 1 to 400°C: ±5%
*2: (−199.9°C to 0): ±0.2% of F.S. ±1 digit
*3: 0 to 100°C: ±0.2% of F.S. ±1 digit
0 to 200°C, −50 to 150°C, −100 to 100°C: ±0.15% of F.S. ±1 digit
*4: 0 to 10 mV DC: ±0.2% of F.S. ±1 digit
−10 to 10 mV DC: ±0.15% F.S. ±1 digit

7.1.4 Setting

Setting Range: Within the range defined in the input range.
Setpoint Resolution:
Thermocouple input: 1°C or 0.1°C (1°F)
RTD input: 0.1°C (1°F or 0.1°F)
Number of Program Patterns: 19 (UP30)
99 (UP40)
Number of Program Segments:
200 (Max. 99 segments/pattern) (UP30)
400 (Max. 99 segments/pattern) (UP40)
Number of Program Repeats: 999 times
Segment Time: 0 to 9999 minutes
Event Output:
Time event (4), PV event (2) (UP30)
Time event (8), PV event (4) (UP40)
(Open collector output, 24 V DC, 50 mA or less)
Event Indication: LED lamp (2) on the upper part of the front panel
Wait Zone: 0 to 100%
Wait Time: 0 to 100 minutes
Parameter Change:
Available on the front keyboard
Disabling data change is available (pass word system)

7.1.5 Control

Control Action:
Time proportional PID (relay output)
Time proportional PID (Voltage pulse output, for driving external SSR)
Continuous output PID (4 to 20 mA DC output or 1 to 5 V DC output)
Proportional Band (P): 0.1 to 999.9%
Integral Time (I): 0 or 1 to 6000 seconds (0 = integral action OFF)
Derivative Time (D): 0 or 1 to 6000 seconds (0 = derivative action OFF)
Output:
Relay output: Contact rating 250 V AC 3A (resistive load)
Voltage pulse output: 12 V DC, 20 mA
4 to 20 mA output: Load resistance 600 Ω or less
Accuracy ±0.3% of F.S.
1 to 5 V DC output: Load resistance 1 kΩ or more
Accuracy ±0.3% of F.S.
Output updating period: 100 ms (for 4 to 20 mA DC output)

Cycle time: 1 to 100 seconds (relay or voltage pulse output)
Output high/low limit:
0 to 100% (time proportional) −5 to 105% (continuous output PID)
Output action selection: Direct/reverse action selectable
Auto/manual transfer: Balanceless bumpless
Output velocity (rate-of-change) limit: 0 or 1 to 100%/second (0 = OFF)

7.1.6 Other Functions
Auto tuning, multi-PID, key lock, and burnout

7.1.7 General Specifications
Insulation Resistance: 20 MΩ or more at 500 V DC between each terminal and ground
Withstand Voltage:
1500 V AC for 1 min. between power terminals and ground
1000 V AC for 1 min. between input terminals and ground
1500 V AC for 1 min. between output terminals and ground
Power Supply Voltage:
100 V system 90 to 132 V AC
200 V system 180 to 250 V AC
Supply Frequency: 50/60 Hz either acceptable
Power Consumption: Approx. 9 VA
Memory Backup: Provided with lithium battery (battery life ... About 10 years)
Fail Output: Open collector output one point (24 V DC, 50 mA or less)(OFF in fail or power off status)
Each of the measured input, control output and transmission output circuits is isolated from other two, respectively.

7.1.8 Normal Operating Conditions
(Operating conditions designed for the controller to work properly and continuously)
Ambient Temperature: 0 to 50°C
Ambient Humidity: 20 to 90% R.H.
Reference Junction Temperature Compensation Error (in the range 0 to 50°C):
Types R, S, B, and W ..... ±1°C
Types K, E, J, L, T, U, and N ..... ±0.5°C
Magnetic Field: 400 AT/m or less
Warmup Time: 30 minutes or more

7.1.9 Operating Condition Effect
Ambient Temperature Variation Effect :
Input stability: ±1 μV/°C or 0.01%/°C (whichever greater) or less
Output stability (continuous output) ±0.05% or less
Supply Voltage Variation Effect :
Input stability: ±1 μV/10% or ±0.01%/10% (whichever greater) or less
Output stability: ±0.05%/10% or less

7.1.10 Construction (UP30)
Mounting: Panel flush mounting
Case: Resin mold
Weight: Approx. 1 kg
External Dimensions: 96×96×180 mm
Panel Cutout Dimensions: $92^{+1}_{-0}\times92^{+0.8}_{-0}$ mm

7.1.11 Construction (UP40)
Mounting: Panel flush mounting
Case: Steel plate
Weight: Approx. 1.5 kg
External Dimensions: 144×96×180 mm
Panel Cutout Dimensions: $138^{+1}_{-0}\times92^{+0.8}_{-0}$ mm

7.1.12 Transportation and Storage Conditions
Temperature: −25 to 70°C
Humidity: 5 to 95% R.H. (non-condensing)

7.2 Optional Features (Symbols within ( ) show the optional specification codes.)

(1) DCV Input (/DCV) ..... Available for models UP40-1 A only.
- DC voltage input (1 to 5 V, 0 to 1 V, 0 to 10 V, 0 to 5 V or −1 to +1 V) is added to the models for thermocouple, mV, and 4 to 20 mA inputs.

Input Group	Measuring Range Code	Type of Input (Range)		
DC voltage	020 021 030 031 040	DCV	0 to 1 V −1 to 1 V 0 to 5 V 1 to 5 V 0 to 10 V	−1999 to 9999 Scaling available (Position of decimal point progrmmable)

(2) Input Type Designation (/F□□□)*
- The controller is shipped with the designated input type set. (Designate the measuring range code.)

* If designation is not done, the initial setting on shipment is type K thermocouple, −200 to 1200°C (measuring range code 131) for TC/mV input models and Pt100 JIS 0 to 200.0°C (measuring range code 201) for RTD input models.

(3) Transmission Output (/RET)
- A measured value, setpoint, or output value is output to the outside in 4 to 20 mA DC.
The transmission output of measured value or setpoint can be subjected to scaling.
(Selection of measured value, setpoint, or output value can be done by key operation.)

(4) RS-422 Interface (/RS422)

Note) /RET specification cannot be designated together with /RS422 specification.

7.3 Model and Suffix Codes

Model	Suffix Code	Description
UP30/UP40	.....	Program Controller
Measuring input group	**−1**.....	Thermocoupel, MV, and 4 to 20 mA DC inpput
	−2.....	RTD (resistance temperature detector) input
Control action	**1**.....	Time proportional PID (relay output)
	2.....	Time proportional PID (voltage pulse output)
	3.....	Continuous output PID (4 to 20 mA DC output)
	4.....	Continuous output PID (1 to 5 V DC output)
Power supply	**1**.....	100 V system (90 to 132 V) AC
	5.....	200 V system (180 to 250 V) AC
Style code	***B** ...	Style B
	/□	Optional features code

YOKOGAWA ◆

YOKOGAWA ELECTRIC CORPORATION

Headquarters
9-32, Nakacho 2-chome, Musashino-shi, Tokyo, 180 JAPAN
Phone: 0422-54-1111 Fax: (GIII) 0422-55-0461
Telex: 02822-327 YEW MT J

Tokyo No. 1 Sales Office
P. O. Box 4125, Shinjuku Center Bldg. (50F)
25-1, Nishi-shinjuku 1-chome, Shinjuku-ku, Tokyo, 160 JAPAN
Phone: 03-349-0611 Fax: (GIII) 03-348-3705
Telex: J27584 YEWTOK

Tokyo No. 2 Sales Office
P. O. Box 6044, Shinjuku NS Bldg. (10F)
4-1, Nishi-shinjuku 2-chome, Shinjuku-ku, Tokyo, 160 JAPAN
Phone: 03-349-1821 Fax: (GIII) 03-349-1859
Telex: J27473 YEWTOK

Branch Offices
Osaka, Nagoya, Hiroshima, Kitakyushu, Sapporo, Sendai, Niigata, Mito, Kanazawa, Kashima, Ichihara, Wakayama, Fukuyama, Okayama, Takamatsu, Niihama, Imabari, Iyo-mishima, Oita, Fukuoka, Nagasaki and Naha

Overseas Representative Offices/Service Centers
Safat (Kuwait), Beijing, Shanghai (The People's Republic of China)

Overseas Liaison Office / London (U. K.)

YOKOGAWA CORPORATION OF AMERICA

Headquarters
2 Dart Road, Shenandoah, Industrial Park Newnan Ga.30265, U.S.A.
Phone: 1-404-253-7000 Fax: 1-404-251-2088
Telex: 230-244880 YCA

Sales Headquarters
200 West Park Drive, Suite 251, Peachtree City, Ga. 30269, U.S.A.
Phone: 1-404-487-1471 Fax: 1-404-487-1822

Branch Offices / Houston, New Jersey, Chicago

YOKOGAWA ELECTROFACT B. V.

Headquarters
Radiumweg 30, 3812 RA Amersfoort, THE NETHERLANDS
Phone: 31-33-641611 Fax: 31-33-631202
Telex: 44-79118 YEF NL

International Division-Liaison Office / Lyon (France)

Branch Offices / Dormagen (West Germany), Milano (Italy), Paris, Grenoble (France), Wien (Austria), Brussels (Belgium), Isleworth (United Kingdom)

YOKOGAWA ELETRICA DO BRASIL IND. E COM. LTDA.

Praca Acapulco, No. 31 Parque Industrial Jurubatuba CEP 04675
Santo Amaro—Sao Paulo, SP BRAZIL
Phone: 55-11-548-2666 Telex: 38-1125128 DNFF BR
Fax: 55-11-522-5231

YOKOGAWA CORPORATION OF ASIA PTE. LTD.

Unit 35-00 PSA-Bldg. 460 Alexandra Road, Singapore 0511, SINGAPORE
Phone: 65-272-9537 (12 lines) Fax: 65-278-0558
Telex: RS87-26137 YASSIN

HANKUK YOKOGAWA ELECTRIC CO., LTD.

K.P.O. Box: 1481, Korean Reinsurance Bldg. 205,
80 Susong-Dong, Chongro-ku, Seoul, KOREA
Phone: 82-2-733-0771 to -0775 Fax: 001-82-2-739-3987
Telex: 801-24800 HYECO

Branch Offices / Yeosu, Ulsan

Dec. '87