Instruction Manual

UT350L
Limit Controller
Instruction Manual

GREEN SERIES

IM 5D1D21-01E

YOKOGAWA

Yokogawa M&C Corporation

IM 5D1D21-01E
1st Edition

◆ Introduction

This instruction manual explains how to operate the UT350L Limit Controller (hereinafter referred to as simply "UT350L") as well as functions provided with the unit.

■ Topics Covered in This Manual

This instruction manual consists of 5 parts, A through E.

1) Part A : Product Specifications and Installation
   This part explains how to install and wire the UT350L.
2) Part B : Name of Parts, Settings and Operation
   This part explains parts and their functions, how to set parameters (before start-up) and how to operate the UT350L.
3) Part C : Basic Functions
   This part explains basic functions of the UT350L and related parameters (set-up and operating).
4) Part D : Maintenance
   This part explains daily maintenance and troubleshooting, and also provides information on parts service-life.
5) Part E : Communication
   This part explains communication functions of the UT350L.
   This part is applicable only to the UT350L-01 (with the optional communication function).

● Intended Readers

This manual has been written for the below persons. It is assumed these persons are qualified to handle and operate this equipment.

- Persons in charge of installation and wiring
- Operators and/or persons in charge of daily maintenance or electrical maintenance

FD No.IM 5D1D21-01E(Windows)
1st Edition: July 1997(YG)
All Rights Reserved,Copyright ©1997, Yokogawa M&C Corporation

◆ Visually Checking the Product and Accessories

After receiving this product, visually check for damage. Also, check the following items.

Check that the model no. on the equipment and packaging matches your order.

1) Model No. and Suffix Code

Model	Suffix Code	Description
UT350L		Limit Controller
	-0	Standard model
Optional specification	0 1	None With communication

Note : A standard model without option called, for example, UT350L-00.

2) Package Contents: Check the following items are included in the package.

- 1 UT350L
- 1 large bracket (Top) and 1 small braket (Botom)
- 1 unit seal (T9115VE)
- Instruction manual (This manual: IM 5D1D21-01E)
- Instruction manual (GREEN SERIES Communication Functions: IM5D1D01-10E)
  Supplied only for UT350L model with communication functions

3) Checking Measured Input Range and Control Output Type

- Except on option specification products, measured input range and control output type are as follows. Settings are factory-set.

	Measured input range code
UT350L-0□	1 (Thermocouple type K -300 ~ 2500°F)

- Operation to change measured input range code is described in this manual.

◆ Document Map

The below table lists documents related to the UT350L. Refer to them as needed.

Document	Document. No.	Title	Application			
			Basic functions	Communication functions	Regular operation	Installation and maintenance
Instruction Manual	IM 5D1D21-01E (This manual)	UT350L Limit Controller	◎	◎	◎	◎
	IM 5D1D01-10E	GREEN Series Communication Functions	○	◎		

◎: Always read before use.

○: Read as needed for reference.

◆ NOTICE

■ Notes Regarding This Manual

(1) This manual should be passed on to the end-user.

(2) Read this manual carefully and fully understand how to operate this product before you start operation.

(3) This manual explains product functions. Yokogawa M&C Corporation (hereinafter referred to as simply "Yokogawa") does not guarantee functions will suit the user's needs.

(4) It is strictly forbidden to copy or transcribe all or any part of this manual without the express written permission of Yokogawa.

(5) The content of this manual is subject to change without prior notice.

(6) Every effort has been made to ensure accuracy in the preparation of this manual. Should you notice any errors or omissions, please contact your nearest Yokogawa representative or the place of purchase.

■ Regarding Protection, Safety, and Prohibition Against Unauthorized Modification

(1) To protect and ensure the safety of this product and the system it controls, as well as to ensure personnel safety, observe all instructions and precautions specified in this manual. Take note that if you fail to handle this product in accordance with these instructions, Yokogawa does not guarantee safety.

(2) The following safety indications are used on this product and in this manual.

⚠ CAUTION

This marking is used on the product and in this manual to call your attention to the possibility of personal injury or death, and/or equipment damage, should the equipment be handled improperly. It is an important safety symbol and should be observed at all times. Where discovering this symbol on the equipment itself, refer to the manual for more information.

Protective ground terminal:

This symbol mark indicates ground terminals which protect against electric shock. Always ground this equipment before use.

Function ground terminal:

This symbol mark indicates ground terminals which protect against electrical noise. Always ground this equipment before use.

CAUTION

This indication is used to call your attention to possible equipment damage or other items important to equipment handling and usage.

The following symbols are used in this manual only.

WARNING
Indicates important items related to hardware or software damage, or system trouble.

IMPORTANT
Indicates items that should be known about equipment operation and functions.

NOTE
Indicates items that should be known about equipment operation and functions.

TIP
Provides supplemental information.

See Also
Indicates another source of reference.

(3) If protection/safety circuits are to be used for the product or the system controlled by it, they should be installed outside of the product.
(4) When you replace parts or consumables, use those specified by Yokogawa.
(5) Do not modify this product.

■ Product liability

(1) Yokogawa does not guarantee this product except for what is specified in the WARRANTY.
(2) Yokogawa assumes no liability whatsoever for losses or damage, direct or indirect, incurred by users or third parties, due to the use or any unforeseen defect of this product.

■ Drawings

Some drawings in this manual have been emphasized or simplified for the convenience of the explanation.

● LED Indications

Alphabet	LED displayed character	Alphabet	LED displayed character	Numeral	LED displayed number
A	A	N	n	1	1
B	b	O	o	2	2
C	C	P	P	3	3
D	d	Q	q	4	4
E	E	R	r	5	5
F	F	S	S	6	6
G	G	T	t	7	7
H	H	U	U	8	8
I	I	V	V	9	9
J	J	W	u	0	0
K	K	X	None		
L	L	Y	y		
M	n	Z	z		

● Special Notations

(1) Notations included in “ ” indicate displayed alphanumeric characters.

(2) Notations included in { } indicate lamps on the instrument front panel.

CONTENTS

Introduction i
Visually Checking the Product and Accessories ii
Document Map iii
NOTICE iv

Part A: Product Specifications and Installation

1. Product Specifications A1-1
    1.1 Overview A1-1
    1.2 Product Specification Checklist A1-1
    1.3 Features A1-1
    1.4 Hardware Specifications A1-2

2. Installation A2-1
    2.1 Location A2-1
    2.2 External and Panel Cutout Dimensions A2-2
        2.2.1 External Dimensions A2-2
        2.2.2 Panel Cutout Dimensions A2-2
    2.3 Installation A2-3
    2.4 Attaching the Terminal Cover A2-4

3. Wiring A3-1
    3.1 Wiring A3-1
        3.1.1 Cables and Terminals A3-1
        3.1.2 Cable Direction A3-2
        3.1.3 Noise A3-2
    3.2 Terminal Wiring Diagram A3-3
        3.2.1 Grounding and Power Supply Wiring A3-4
        3.2.2 Measured Input Wiring A3-6
        3.2.3 Control Output Wiring A3-8
        3.2.4 Alarm Output Wiring A3-10
        3.2.5 External Contact Input Wiring A3-11
        3.2.6 Retransmission Output Wiring A3-12
        3.2.7 PC Link/Ladder Communications Wiring (Optional specification) A3-13

Part B: Names of Parts, Setting and Operation

1. Components and Their Functions B1-1

1.1 External View and Structure B1-1

1.2 LED Display Organization B1-3

1.3 Operating Displays B1-4

1.4 Parameter Setting Displays B1-6

1.4.1 Operating Parameter Setting Displays B1-6

1.4.2 Setup Parameter Setting Displays B1-7

1.5 Security Functions B1-8

2. Preparations Prior to Operation B2-1

2.1 Setting the Setup Parameters B2-2

2.1.1 Setting and Changing the Password B2-2

2.1.2 Setting the I/O Functions B2-5

2.1.3 Setting the Control, Alarm and Communication Functions B2-8

2.2 Setting the Operating Parameters B2-11

2.2.1 Setting Alarm Setpoint Parameters B2-12

2.2.2 Setting Other Operating Parameters B2-13

3. Operation B3-1

3.1 Notes Before Operation B3-1

3.2 Understanding the Operating Displays B3-2

3.3 Confirmation of the limit output B3-3

3.4 Operation in Confirmation mode B3-4

Part C: Basic Functions

1. Function C1-1

1.1 Function of the Limit control C1-1

2. Input Computation Functions C2-1

2.1 Input Computation C2-1

2.1.1 Input Type Selection C2-1

2.1.2 Input Range Conversion C2-3

2.1.3 Measured Input Bias C2-3

2.1.4 Measured Input Filter C2-4

3. Limit Control Functions C3-1
3.1 Limit control action..... C3-1
3.1.1 Limit control C3-1
3.1.2 Power on status C3-1
3.1.3 At Power-off C3-3
3.2 Parameters in the Confirmation Mode C3-3
3.2.1 Duration Time C3-3
3.2.2 Maximum / Minimum value C3-3

4. Retransmission Output C4-1

5. Alarm Function..... C5-1
5.1 Alarm Output C5-1
5.2 Fault Diagnostic Alarm C5-3
5.3 Fail Output C5-3

6. Behavior After Power Failure Recovery C6-1

Part D: Maintenance

1. Problems and Corrective Measures D1-1
1.1 What To Do When Errors Occur D1-1
1.1.1 Power-ON Errors D1-1
1.1.2 Operating Errors D1-2
1.2 Troubleshooting Flow Chart D1-3

2. Cleaning and Maintenance D2-1
2.1 Cleaning D2-1
2.2 Replacing the Mounting Bracket D2-1
2.3 Limited Life Components and Maintenance D2-1

Part E: Communication

1. Communication Functions E1-1

2. Functions and Applications of D Registers E2-1
2.1 Outline of D Registers..... E2-1
2.2 Method of Reading the D Register Table E2-2

2.3 Configuration of D Registers E2-3
2.4 D Register Map Tables E2-4
2.5 Information on Read Only D Registers E2-8
2.6 User Area E2-9

3. Functions and Applications of I Relays E3-1
3.1 Outline of I Relays E3-1
3.2 Method of Reading the I Relay Table E3-1
3.3 Configuration of I Relays E3-2
3.4 User Area E3-5
3.5 Access via Communications E3-5

Appendix

Appendix 1 Operating Parameter Table App.1-1
Appendix 2 Setup Parameter Table App.2-1
Appendix 3 Enginnering Units (EU, EUS) App.3-1

Revision Record

Part A: Product Specifications and Installation

CONTENTS

1. Product Specifications A1-1
1.1 Overview A1-1
1.2 Product Specification Checklist A1-1
1.3 Features A1-1
1.4 Hardware Specifications A1-2
2. Installation A2-1
2.1 Location A2-1
2.2 External and Panel Cutout Dimensions A2-2
2.2.1 External Dimensions A2-2
2.2.2 Panel Cutout Dimensions A2-2
2.3 Installation A2-3
2.4 Attaching the Terminal Cover A2-4
3. Wiring A3-1
3.1 Wiring A3-1
3.1.1 Cables and Terminals A3-1
3.1.2 Cable Direction A3-2
3.1.3 Noise A3-2
3.2 Terminal Wiring Diagram A3-3
3.2.1 Grounding and Power Supply Wiring A3-4
3.2.2 Measured Input Wiring A3-6
3.2.3 Control Output Wiring A3-8
3.2.4 Alarm Output Wiring A3-10
3.2.5 External Contact Input Wiring A3-11
3.2.6 Retransmission Output Wiring A3-12
3.2.7 PC Link/Ladder Communications Wiring (Optional specification) A3-13

1. Product Specifications

1.1 Overview

The UT350L is an FM approved limit controller with a large 4-digit (20 mm character height) LED display for displaying measured values and another 4-digit (9.3 mm character height) LED display for displaying parameters. It derives the know-how from the UT15L conventional limit controller, with an input sampling cycle of 250ms and an input accuracy of ±0.1% full scale for process variables

The Green 300 Series enables communications with host PCs, programmable controllers, etc.

1.2 Product Specification Checklist

Check that model and suffix codes of the instrument match your order. Model and suffix codes are given in the below table.

Model	Suffix code		Measured input	Alarm output	Communication port
UT350L	**-0** (standard)		1	2	———
Optional specification		**0**	———	———	———
		1	———	———	1

1.3 Features

The UT350L has the following features.

① Large, 4-digit digital display

② One universal input (thermocouple, temperature resistor [RTD], standardized signal or DC voltage).

③ Retransmission output is included in the standard equipment.

④ DIN standard size (1/4 DIN). Depth is 100 mm on all models. Weight is approximately 0.7 kg.

⑤ Equipped with a communication port to improve compatibility with PCs and programmable controllers.

1.4 Hardware Specifications

- **I/O signal specifications**

Measured input signals

Number of inputs : 1

Input type, instrument range and measurement accuracy :

See the below table. Input type, instrument range and measurement accuracy can be selected from the input list.

Burnout detection :

Uses the thermocouple, RTD or voltage input between 0.4 and 2 V or 1 and 5 V. Can be set to upscale , downscale, or off.

Input	Type	Measured input range		Measurement accuracy
Thermocouple	K	-200 to 1370°C	-300 to 2500°F	0°C or higher : ± 0.1% ± 1 digit of FS Less than 0°C :± 0.2% ± 1 digit of FS
		-199.9 to 999.9°C	0 to 2300°F	
		-199.9 to 500.0°C	-199.9 to 999.9°F	
	J	-199.9 to 999.9°C	-300 to 2300°F	
	T	-199.9 to 400.0°C	-300 to 750°F	
		0.0 to 400.0°C	-199.9 to 750.0°F	
	B	0 to 1800°C	32 to 3300°F	400°C or higher : ± 0.15% ± 1 digit of FS Less than 400°C : ± 5% ± 1 digit of FS
	S	0 to 1700°C	32 to 3100°F	± 0.15% ± 1 digit of FS
	R	0 to 1700°C	32 to 3100°F	
	N	-200 to 1300°C	-300 to 2400°F	± 0.2% ± 1 digit of FS
	E	-199.9 to 999.9°C	-300 to 1800°F	0°C or higher : ± 0.1% ± 1 digit of FS Less than 0°C : ± 0.2% ± 1 digit of FS
	L	-199.9 to 900.0°C	-300 to 1300°F	
	U	-199.9 to 400.0°C	-300 to 750°F	
		0.0 to 400.0°C	-199.9 to 750.0°F	
	W	0 to 2300°C	32 to 4200°F	± 0.2% ± 1 digit of FS
	Platinel 2	0 to 1390°C	32 to 2500°F	± 0.1% ± 1 digit of FS
	PR20-40	0 to 1900°C	32 to 3400°F	800°C or higher : ± 0.5% ± 1 digit of FS Less than 800°C : Not guaranteed
	W97Re3-W75Re25	0 to 2000°C	32 to 3600°F	± 0.1% ± 1 digit of FS
RTD	JPt100	-199.9 to 500.0°C	-199.9 to 999.9°F	± 0.2% ± 1 digit of FS
		-150.0 to 150.0°C	-199.9 to 300.0°F	± 0.1% ± 1 digit of FS
	Pt100	-199.9 to 640.0°C	-300 to 1180°F	± 0.2% ± 1 digit of FS
		-199.9 to 500.0°C	-199.9 to 999.9°F	
		-150.0 to 150.0°C	-199.9 to 300.0°F	± 0.1% ± 1 digit of FS
Standardized signal	0.4 to 2V	0.400 to 2.000	Scaling possible with ranges on left. -1999 to 9999 -199.9 to 999.9 -19.99 to 99.99 -1.999 to 9.999	± 0.1% ± 1 digit of FS
	1 to 5V	1.000 to 5.000		
DC voltage	0 to 2V	0.000 to 2.000		
	0 to 10V	0.00 to 10.00		
DC voltage	-10 to 20mV	-10.00 to 20.00		
	0 to 100mV	0.0 to 100.0		

Input bias current : 0.05 μA (For thermocouple or RTD)

Burn-out is detected when voltage input is 0.1 V or less.

Input resistance : Min. 1 MΩ for thermocouple/mV input

Approx. 1 MΩ for DC voltage input

Allowed signal source resistance : Max. 250 Ω for thermocouple/mV input

Influence of allowed signal source resistance : 0.1 μV/Ω or less

2 kΩ or less for DC voltage input

Influence of allowed signal source resistance : 0.01%/100 Ω or less

Allowed wire resistance : For RTD

Max. 150 Ω/1 wire (Same for leadwire resistance in a 3-wire system)

10 Ω/1 wire in the -150.0 to 150.0°C range

Influence of allowed wire resistance : 0.1°C/10 Ω or less

Allowed input voltage : ±10V DC for thermocouple, mV or RTD input

±20V DC for DC voltage input

Noise elimination range : 40 dB (50/60 Hz) and higher in normal mode

120 dB (50/60 Hz) and higher in common mode

Reference contact compensation error : ±1.0°C (15 to 35°C), ±1.5 (0 to 50°C)

Applicable standards : JIS, IEC and DIN for thermocouple and RTD

Retransmission output : Outputs measured value. Either the sensor power supply or this output is used.

No. of outputs : 1

Output signal : 4 to 20 mA DC

Load resistance : Max. 600 Ω

Output accuracy : ±0.3% of span

Limit control output

Relay output

No. of outputs : 1

Relay contact rating : 240V AC, 3 A or 30V DC, 3 A (Resistive load)

Min. resolution : 10 ms

Contact input

Usage : Confirmation of limit output.

Number of inputs : 1

Input type : No-voltage contact or transistor open collector

Input contact capacity : 12V DC, 10 mA or more

ON/OFF determination:

For contact input, ON is assumed if contact resistance is a 1 kΩ or less, whereas OFF is assumed if contact resistance is 20 kΩ or more.

For transistor open collector input, ON is assumed if contact resistance is 2 V or less and OFF is assumed if leakage current is 0.1 mA or less.

Min. period for retaining the status detection : 0.4 s

Devices connected to the UT350L must comply with IEC1010 and 950.

Contact output

Usage : Alarm output, fail output

No. of outputs : 2

Relay contact rating : 240V AC, 1 A or 30V DC, 1 A (Resistive load)

Devices connected to the UT350L must comply with IEC1010 and 950.

- **Display specifications**

Measured value display : 4-digit 7-segment red LED, character height: 20 mm

Parameter display : 4-digit 7-segment red LED, character height: 9.3 mm

Status lamps : LED

- **Safety standards and EMC conformity (now in application)**

Safety standards : Conforms with IEC1010-1:1990 and EN61010-1:1992. Certified for FM-3810 and FM-3545. UL508 approval. The voltage cotegory of each input is CAT II (IEC1010-1).

EMC conformity : Conforms with the below EMC standards. (When testing, the instrument has a measurement accuracy within ±20% of the range.)

Group 1, Class A, EN55011 for EMI (Emission)

EN50082-2:1995 for EMS (Immunity)

- **Power supply specification and isolation**

Power supply : Rated voltage: 100 to 240V AC (±10%), 50/60 Hz

Power consumption : Max. 20 VA (Max. 8.0 W)

ROM : EEPROM with approx. 100,000 rewrite cycles

Withstand voltage

Primary terminal ↔ Secondary terminal : 2300V AC for 1 min

Primary terminal ↔ Ground terminal : 2300V AC for 1 min

Ground terminal ↔ Secondary terminal : 1500V AC for 1 min

Primary terminal : Power supply terminal and relay output terminal

Secondary terminal : Analog input signal terminal and contact input terminal

Insulation resistance : 500V DC, 20 MΩ between power supply terminal and ground terminal

Grounding : Class 3 grounding (grounding resistance of 100 Ω or less)

External circuit breaker rating : 5 A (AC common to both 100 and 220V systems)

Use equipment which conform with IEC947-1 and IEC947-3. Locate the breaker in the same room as the UT350L.

Isolation Specifications:

Isolation between terminal (I/O) blocks is as shown in the figure below.

Terminals separated by thick lines are isolated by function.

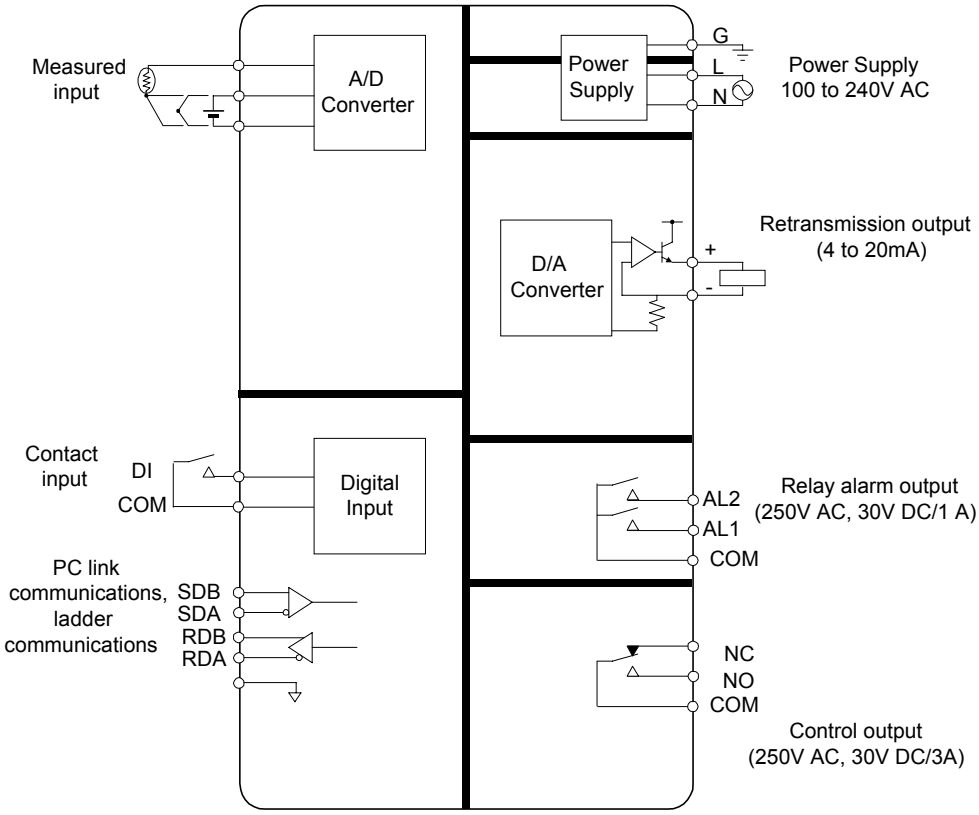

Fig. A1-1 Isolation

IMPORTANT

The power supply and relay contact circuit are forcibly insulated from other circuits.

Table A1-1 Isolation Specifications

Measured input terminal	Isolated from other I/O terminals. Not isolated from internal circuits.
4to 20 mA analog output terminal (Retransmission)	Not isolated from other analog outputs, sensor power supply or voltage pulse control output. Isolated from other I/O terminals and internal circuits.
Relay contact control output terminal	Isolated from other contact output terminals, other I/O terminals and internal circuits.
Contact input terminal	Not isolated from other contact input terminals or communication terminal. Isolated from other I/O terminals and internal circuits.
Relay contact alarm output terminal	Not isolated from other relay contact alarm terminals. Isolated from other I/O terminals and internal circuits.
RS-485 communication terminal	Not isolated from contact input terminals. Isolated from other I/O terminals and internal circuits.
Power supply terminal	Isolated from other I/O terminals and internal circuits.
Ground terminal	Isolated from other I/O terminals and internal circuits.

- **Environmental Conditions**

Installation conditions (Normal operating conditions)

Ambient temperature : 0 to 50°C (Max. 40°C for side-by-side installation with other instruments. Temperature fluctuation: Max. 10°C/h.)

Relative humidity : 20 to 90 %RH (No condensation)

Installation site : Indoors

Magnetic field : Max. 400 AT/m

Continuous vibrations (5 to 14 Hz) : Max. total amplitude: 1.2 mm

Continuous vibrations (14 to 150 Hz) : Max. 4.90 mm/s^2 (0.5 G)

Peak vibrations : 14 m/s^2 (1.5 G) for max. 15 s

Impact : 147 m/s^2 (15 G) for max. 11 ms

Altitude at installation site : Max. 2000 m above sea level

Attitude for installation : Max. 30 degrees off vertical. Do not install upside-down.

Installation category based on IEC1010 : II (See Note.)

Pollution level based on IEC1010 : 2 (See Note.)

Note:

- The “Installation category” implies the regulation for impulse withstand voltage. It is also called the “Overvoltage category”. “II” applies to electrical equipment.
- “Pollution level” describes the degree to which a solid, liquid or gas which deteriorates dielectric strength is adhering. “2” applies to a normal indoor atmosphere.

Shipping and storage conditions

Temperature : -25 to 70°C

Humidity : 5 to 95 %RH (No condensation)

Influence of operating conditions

Influence of ambient temperature

For voltage and thermocouple input : ±1 μV/°C or ±0.01% of FS/°C whichever is higher

For RTD input : ±0.05°C/°C or less

For analog output : ±0.05% of FS/°C or less

Influence of power supply fluctuations (Within rated voltage range)

For analog input : ±1 μV/10 V or ±0.01% of FS/10 V whichever is higher

For analog output : ±0.05% of FS/10 V or less

2. Installation

2.1 Location

CAUTION

Before turning ON the UT350L, make sure that instrument is installed on a panel so as to avoid electric shock.

NOTE (Notes on location)

Select a location for the UT350L where:

(1) No one can accidentally touch the terminal
(2) There is minimal mechanical vibration
(3) There are no corrosive gases
(4) Ambient temperature is around 23°C with only minimal temperature fluctuation
(5) There is no exposure to heat radiation
(6) It is not influenced by electromagnetic waves
(7) It will not get wet in any way
(8) Inflammable materials are kept at a distance
(9) The terminal board (reference contact compensation element, etc.) is not exposed to drafts
(10) It is not exposed to strong UV light (UV light can deteriorate the LCD and make displays less visible.)

The UT350L case is made of fire-retarding polycarbonate resin and the bezel of fire-retarding ABS resin. Nevertheless, keep the UT350L away from inflammable materials and never locate it on top of such materials.
If unavoidably located near to inflammable materials, ensure a minimum 150 mm of clearance on all sides of the instruments, and shield with a 1.43 mm thick plated steel plate or 1.6 mm thick uncoated steel plate.

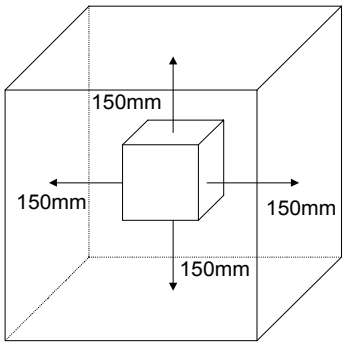

2.2 External and Panel Cutout Dimensions

External and panel cutout dimensions for the UT350L are given below.

2.2.1 External Dimensions

Unit : mm

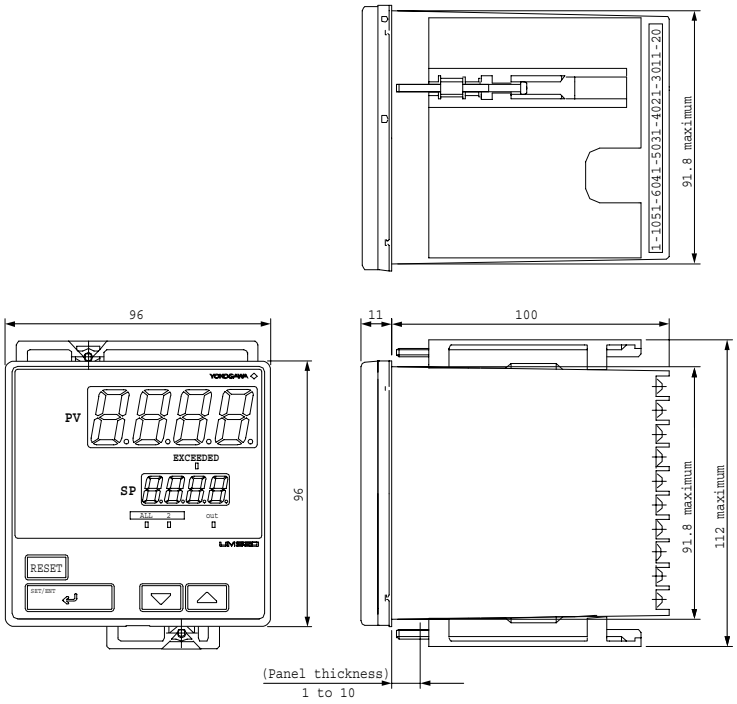

UT350L

Fig. A2-1 External Dimensions

2.2.2 Panel Cutout Dimensions

Use steel plates 1 to 10 mm thick for the panel.

Unit : mm

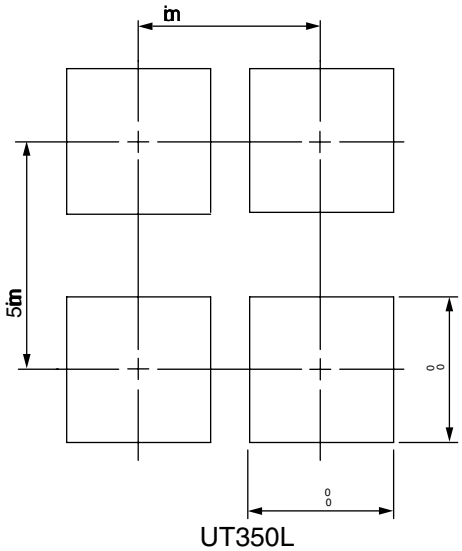

UT350L

Fig. A2-2 Panel Cutout Dimensions

2.3 Installation

Install the UT350L as shown in Fig. A2-3, following the steps below.
Fig. A2-3 shows the installation of UT350L.

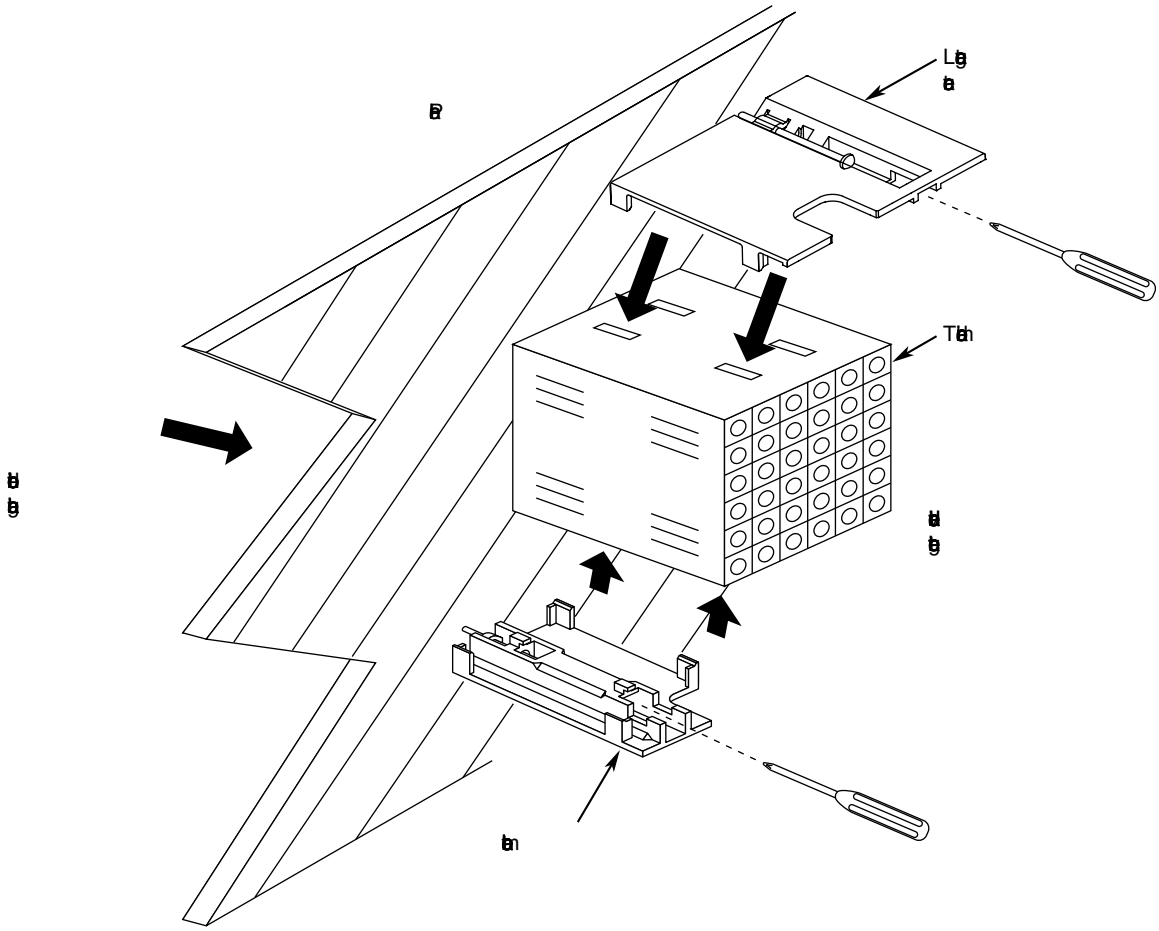

Fig. A2-3 Installation

Step 1
Cut the mounting panel to the dimensions given on the previous page.
Step 2
Insert the unit from its back terminal board side.
Step 3
Attach the upper and lower brackets to the UT350L and fix it to the mounting panel.

WARNING

Do not overly tighten installation screws. Excessive tightening can damage the case and brackets.

WARNING

Install the UT350L 30 degrees from horizontal to the rear. Do not install it with the front panel facing downward.

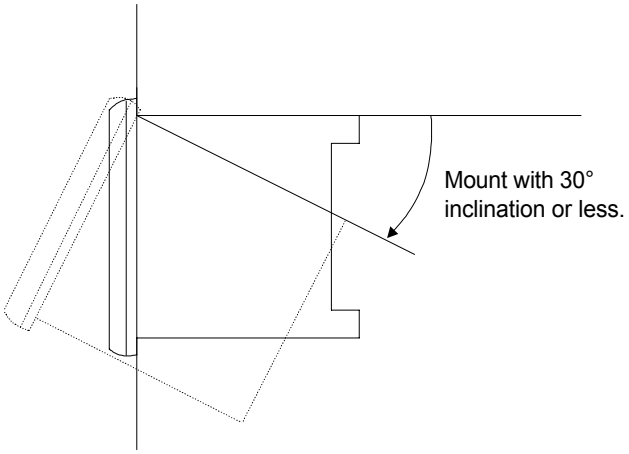

2.4 Attaching the Terminal Cover

Terminals covers are offered as options to prevent direct contact with terminals and possible electric shock while the UT350L is ON. Part No. and required quantity are given below.

Part No.	Controller	Required quantity
T9115YD	UT350L	1

- **Attaching the Terminal Cover**

CAUTION

Shut primary power supply OFF and check connected cables are dead (with a tester, etc.) before attaching the terminal cover. Never touch terminals while power is ON, otherwise you run the risk electric shock.

1. Before attaching the terminal cover, bend the side with the groove inward as shown in Fig. A. Be careful not to bend it backwards. This not only makes it harder to attach the cover but will also weaken its hold.
2. Fit the holes on the top and bottom (UT350L) of the terminal cover over the projections on the brackets (Fig. B) and lock in place.
   The figure below shows the attachment of a terminal cover to UT350L.

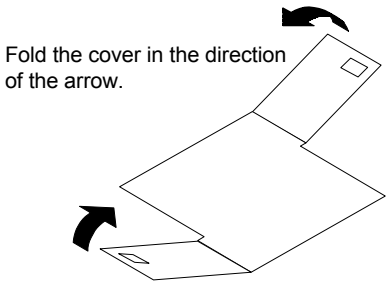

Figure A

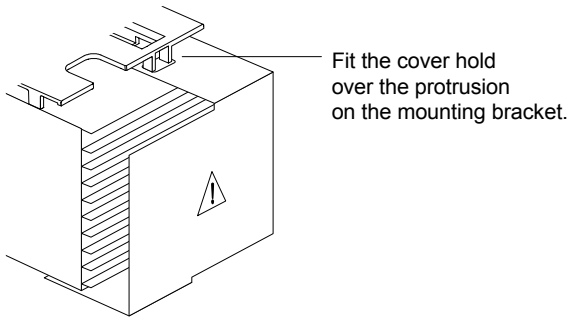

Figure B

3. Wiring

This chapter explains how to wire the UT350L and provides important information on wiring.

CAUTION

Shut the primary power supply OFF and check cables are dead (with a tester, etc.) before connecting to the UT350L. Never touch terminals while power is ON, otherwise you run the risk of electric shock.

3.1 Wiring

Follow the precautions described in the sub-sections below when wiring.

3.1.1 Cables and Terminals

For thermocouple input, use shielded leadwire cable to connect to the terminal. For RTD input, use 3-wire shielded cable of low leadwire resistance and no difference in resistance amongst the 3 leadwires. Specifications for cable sand terminals as well as recommended products are given here below.

- **Cable specifications and recommended cable products**

Table A3-1 Cable specifications

Power supply	600 V vinyl insulated wire/cable, JIS C3307, 0.9 to 2.0 mm^2
Thermocouple	Shielded leadwire cable, JIS C1610, □X-□-□□□□-□ (Yokogawa)
RTD	Shielded cable (3-core), UL 2482 (Hitachi Cable Ltd.)

- **Terminals**

Use crimp-style terminals with insulating sleeve, applicable with M3.5 screws. See the below figure.

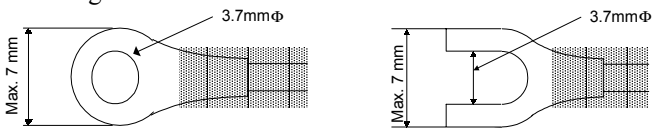

- Recommended Products

Table A3-2 Recommended products

Manufacturer	Type	Applicable cable size	Tightening torque
Japan Atchaku Tanshi	1.25-YS3A	0.3 ~ 1.65mm^2	0.8 N/m (8 kgf/cm) or less
Nippon Tanshi	YD1.25-3.5		

3.1.2 Cable Direction

After connecting cables to rear side terminals, run them in the direction shown in Fig. A3-1.

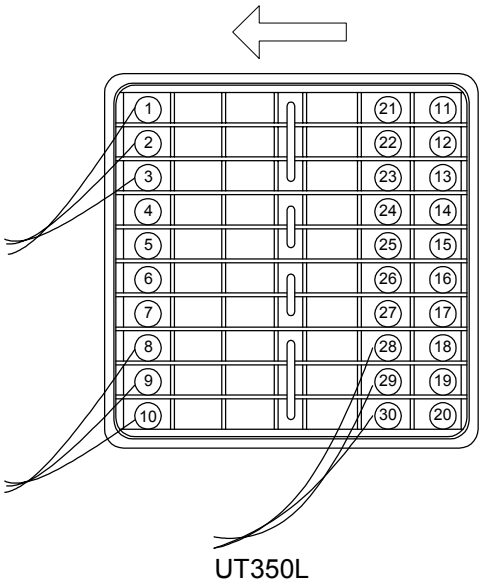

Fig. A3-1 Cable direction

3.1.3 Noise

NOTE

Tie up the cables into a bundle in order to avoid the emission of electromagnetic wave.

- **Possible sources of noise**

The following are typical sources of noise.

- Relays and contacts
- Solenoid coils and valves
- Power lines
- Inductance load
- Inverters
- Motor rectifiers
- Phase angle control SCR
- Radio communicators
- Welding machines
- High-tension igniters

- **Solutions**

When making connections, comply with the following in order to protect against noise from the above mentioned sources.

- Keep input circuit cables as far way as possible from the power supply circuit and grounding circuit.
- Use shielded cable to protect against noise caused by electrostatic induction. Ground the shield where necessary. However, do not use 2-point grounding.
- Twist input cables at regular short intervals to avoid against noise caused by electromagnetic induction.

3.2 Terminal Wiring Diagram

The rear side terminals are arranged as shown in the table below.

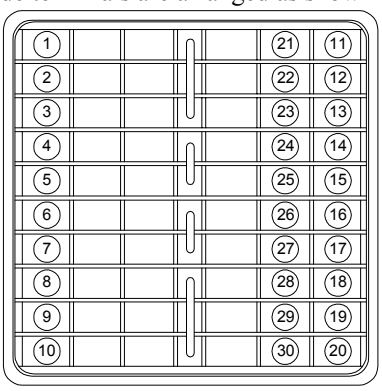

UT350L

Table A3-3 Terminal Array

Terminal No.	Signal
1	Control output (relay contact) NC
2	Control output (relay contact) NO
3	Control output (relay contact) common
4	Not in use*
5	Alarm contact output 2 (relay output)
6	Alarm contact output 1 (relay output)
7	Alarm contact output common (for terminal 6, 5, 4)
8	Power supply L
9	Power supply N
10	GND
11	Measured input terminal A (RTD)
12	Measured input terminal b (RTD) +(TC, mV, V)
13	Measured input terminal B (RTD) -(TC, mV, V)
14	Not in use*
15	Not in use*
16	Retransmission output (+)
17	Retransmission output (-)
18	Not in use*
19	External contact input
20	External contact input common (For terminal 19)
21	Not in use
22	Not in use
23	RS-485 communications SDB(+)
24	RS-485 communications SDA(-)
25	RS-485 communications RDB(+)
26	RS-485 communications RDA(-)
27	RS-485 communications SG
28	Not in use*
29	Not in use*
30	Not in use*

* Note : Don’t connect any wire to those terminals which are described as “not in use”.

3.2.1 Grounding and Power Supply Wiring

CAUTION

Shut primary power supply OFF and check cables are dead (with a tester, etc.) before wiring power supply and to ground.

- Never touch terminals while power is ON, otherwise you run the risk of electric shock.
- Always shut OFF primary power before wiring.

- **Grounding**

- Use a minimum 2 mm^2 gauge wire for the grounding line. Ground the UT350L according to Class 3 Grounding (Max. 100(resistance against ground). Keep the grounding line to a max. 20 m in length.
- Use 1-point grounding only. Do not crossground. GND terminal is terminal No. 10.
- If shielded cable cannot be easily grounded, use a grounding terminal board as shown below.

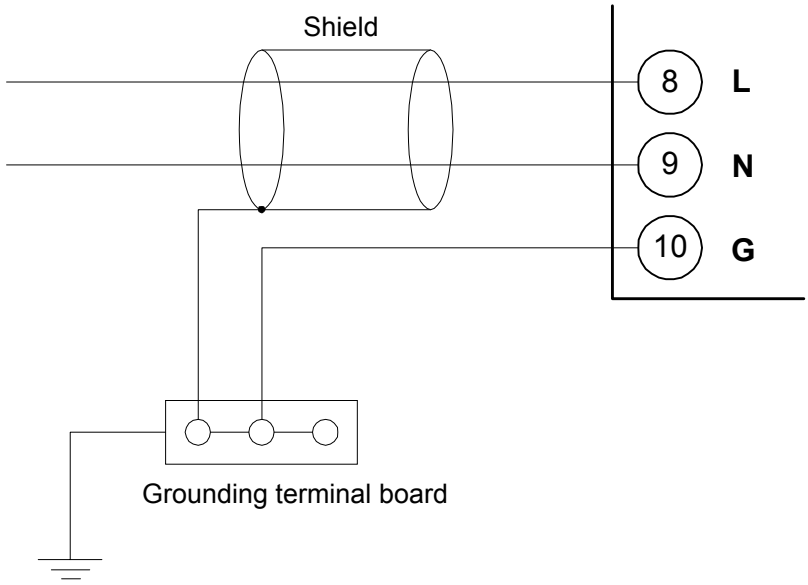

Class 3 Grounding

Fig. A3-2 Grounding Via Grounding Terminal Board

- **Power supply**

- Use a single phase power supply for the UT350L.
- Use a 600 V vinyl insulated cable/wire (JIS C3307) or equivalent cable/wire for the power supply line.
- If power supply noise is high, use an insulating transformer and line filter as shown below.
  Recommended line filter : ZAC2205-00U (TDK)
- To protect against noise, keep primary and secondary power cables apart.

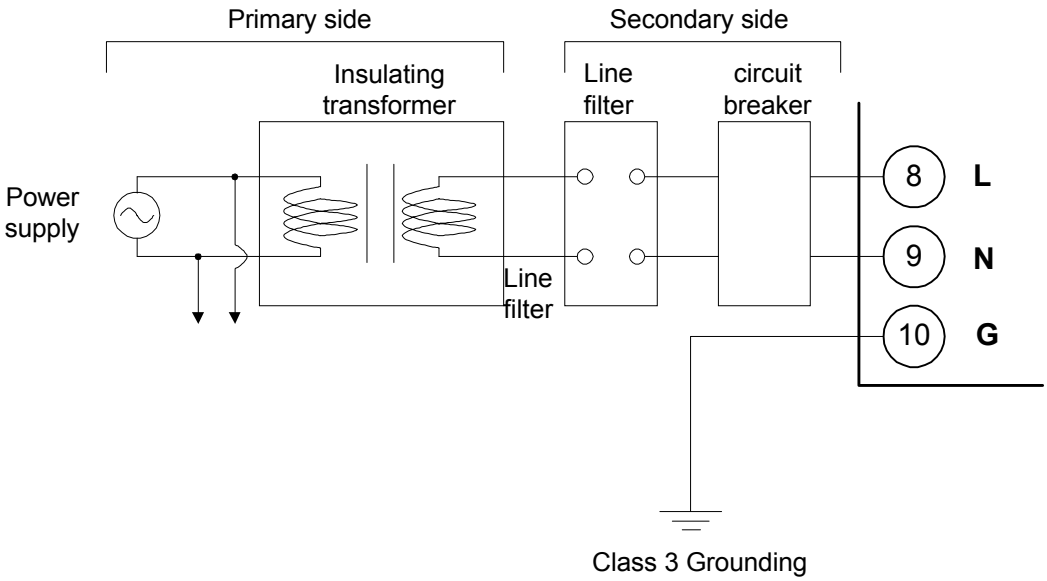

Fig. A3-3 Power Supply Connections

3.2.2 Measured Input Wiring

Wire input signal lines as shown in the below figure. Wire according to the type of input.

CAUTION

Shut OFF the UT350L wiring measured input. Otherwise, you run the risk of electric shock.

NOTE

- Be careful of polarity when wiring inputs. Reversed polarity can damage the UT350L.
- Use shielded cable for inputs, and ground the shield (1-point grounding).
- Keep measured input signal lines as far away as possible from the power supply circuit and grounding circuit.

- **Thermocouple input**

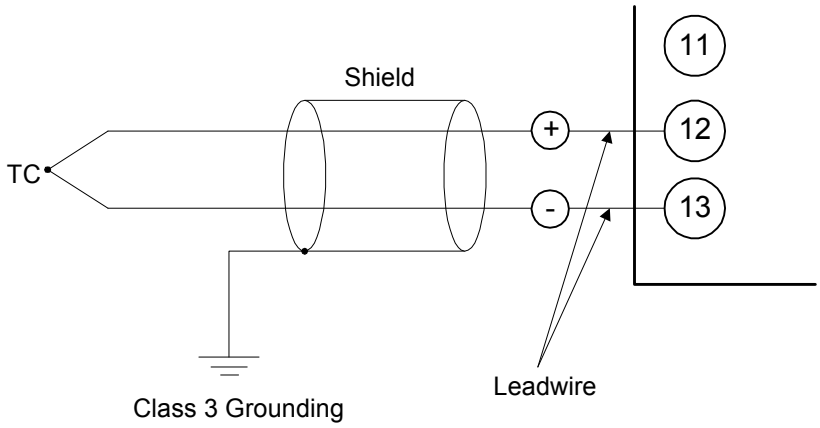

Fig. A3-4 Wiring for Thermocouple Input

- **RTD Input**

- Use 3-wire shielded cable of low leadwire resistance and no difference in resistance amongst the 3 leadwires.

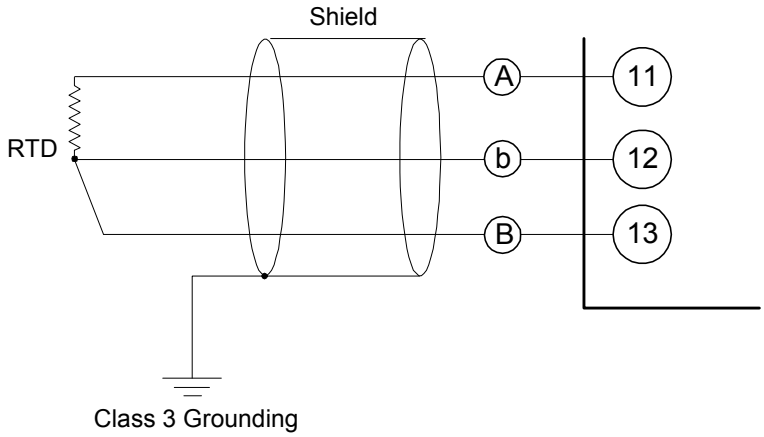

Fig. A3-5 Wiring for RTD Input

CAUTION

The overvoltage category of each input is CAT II (IEC1010-1).

- **DC Voltage Input**

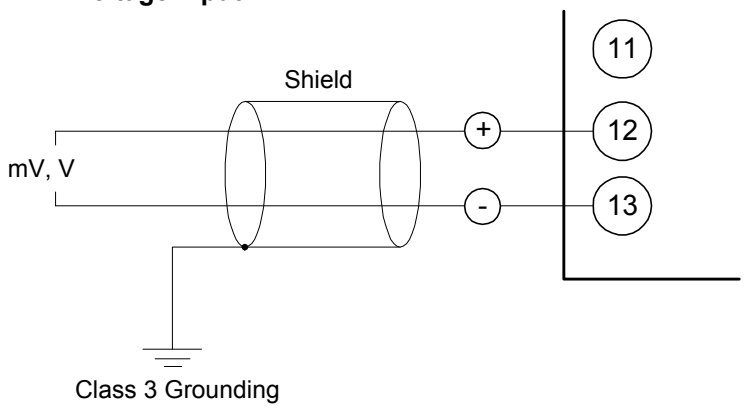

Fig. A3-6 Wiring for DC Voltage Input

- **DC Current Input**

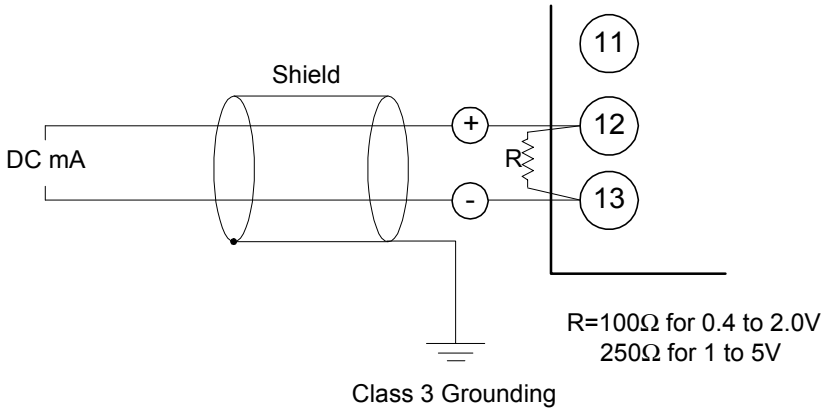

Figure A3-7 Wiring for DC Current Input

3.2.3 Control Output Wiring

CAUTION

Shut OFF the UT350L before wiring external contacts. Otherwise, you run the risk of electric shock.

- **Relay contact output**

- If load exceeds contact capacity (250V AC, 5 A/30V DC, 5 A), switch load ON and OFF using an auxiliary relay.
- Inductance load (L) from auxiliary relays and solenoids valves can cause malfunctions and damage relays. Always fit a CR filter (for AC) or diode (for DC) in parallel with the output relay as a surge suppresser to kill any sparks.

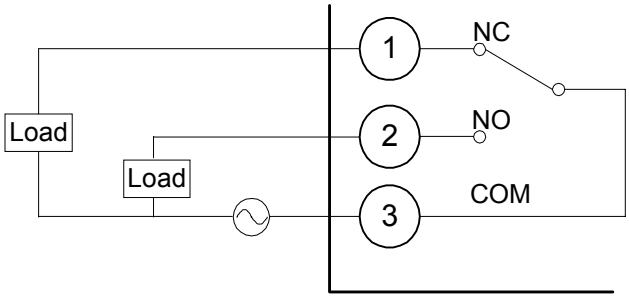

Fig. A3-8 Wiring for Relay Contact Output

- State of output terminals.

	NC (1) - (3)	NO (2) - (3)
Power off	Close	Open
Limit ON	Close	Open
Limit OFF	Open	Close

- For DC Relay

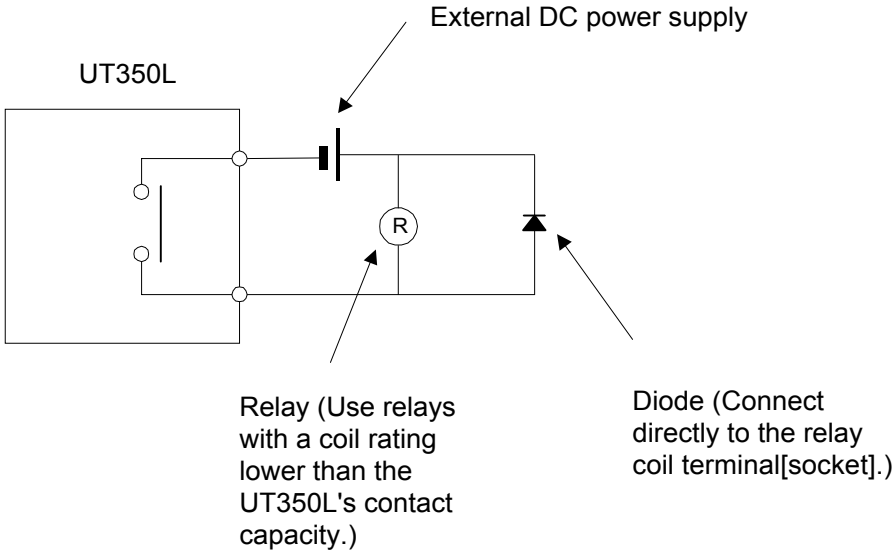

- For AC Relay

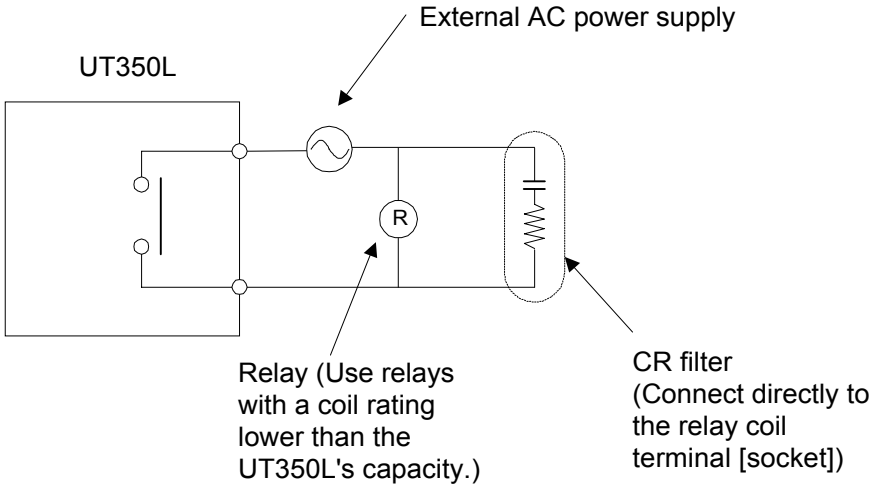

3.2.4 Alarm Output Wiring

CAUTION

Shut OFF the UT350L before wiring external contacts. Otherwise, you run the risk of electric shock.

- **Relay contact output** **Alarm 1** **Alarm 2**

- If load exceeds contact capacity (240V AC, 1 A/30V DC, 1 A), switch load ON and OFF using an auxiliary relay.
- For switching by microcurrent, connect a bleeder resistor so that current flows in excess of the relay's switching capacity.
- The relay's service-life is 100,000 switching cycles (load resistance). With DC loads (L), always fit a CR filter (for AC) or diode (for DC).

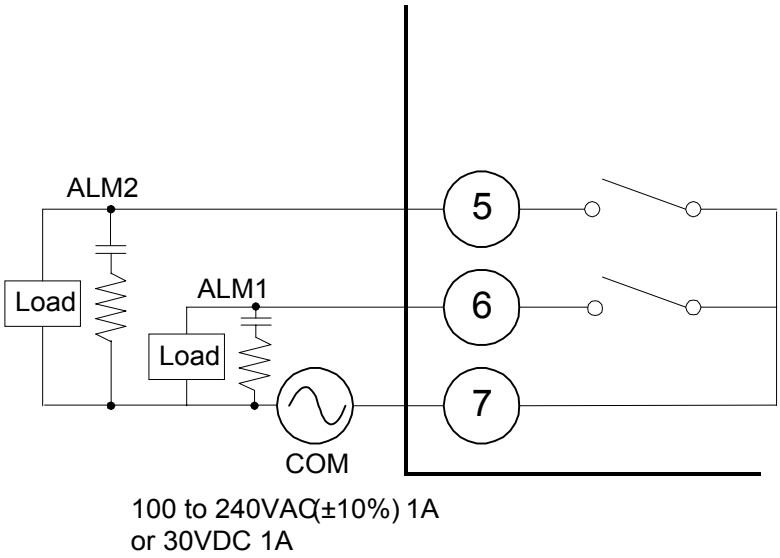

Fig. A3-9 Wiring for Relay Contact Output

3.2.5 External Contact Input Wiring

CAUTION

Shut OFF the UT350L before wiring external contacts. Otherwise, you run the risk of electric shock.

- Use a no-voltage contact (relay contact, etc.) for external contacts.
- Ensure the no-voltage contact can operate properly under the OFF terminal voltage (approx. 5 V) and ON current (approx. 1 mA).
- With an open collector, use a collector which closes the contact when voltage at both terminals is 2 V or less, and opens the contact when leakage current is 100 A or less.

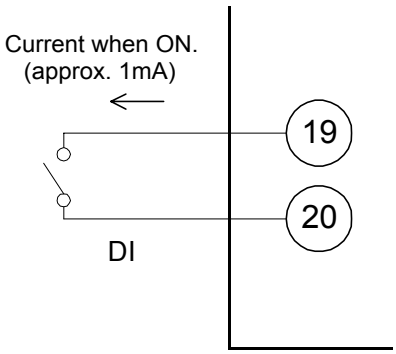

Fig. A3-10 Wiring for External Contact Input(Relay contact)

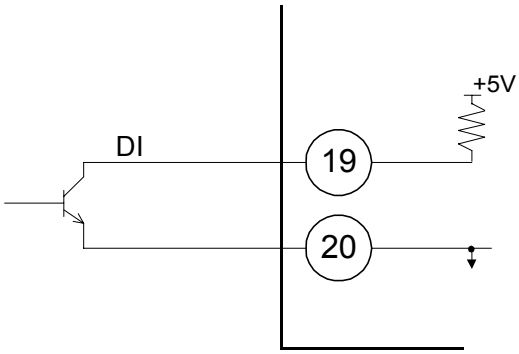

Fig. A3-11 Wiring for External Contact Input(Open collector contact)

3.2.6 Retransmission Output Wiring

CAUTION

Shut OFF the UT350L before connecting/disconnecting the receiver. Otherwise, you run the risk of electric shock.

- The retransmission output and LPS output described on the next page use the same terminal. Select output via parameter settings.
- Retransmission output is 4 to 20 mA DC.

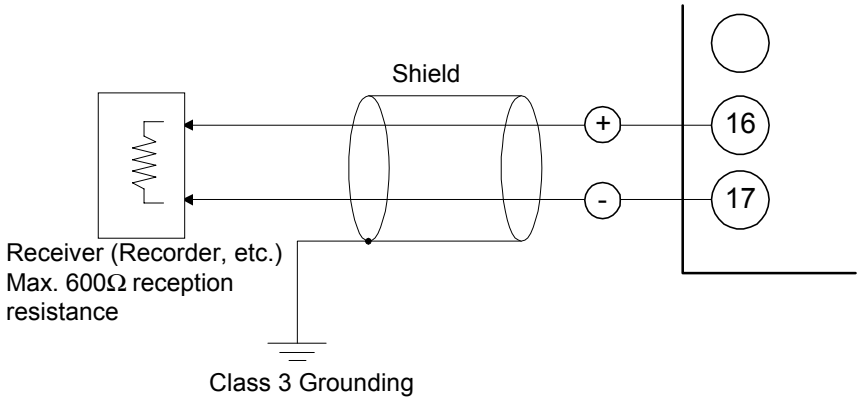

Fig. A3-12 Wiring for Transmission Output

3.2.7 PC Link/Ladder Communications Wiring (Optional specification)

To use the UT350L as a slave station in PC link communication or ladder communication, the optional specification UT350L-01 is required.

CAUTION

Shut OFF the UT350L before connecting to the communication terminal. Otherwise, you run the risk of electric shock.

- Up to 31 slave stations (all Green Series instruments with optional specification) can be connected to a multidrop connection.
- Always connect a terminating resistor (220 Ω, 1/4 W) to both the slave station at the end of the communication line and the master station.
- With 2-wire master stations (PLC, etc.), short-circuit across the SDA and RDA, and SDB and RDB.

RS-485 wiring is shown in the figure below.

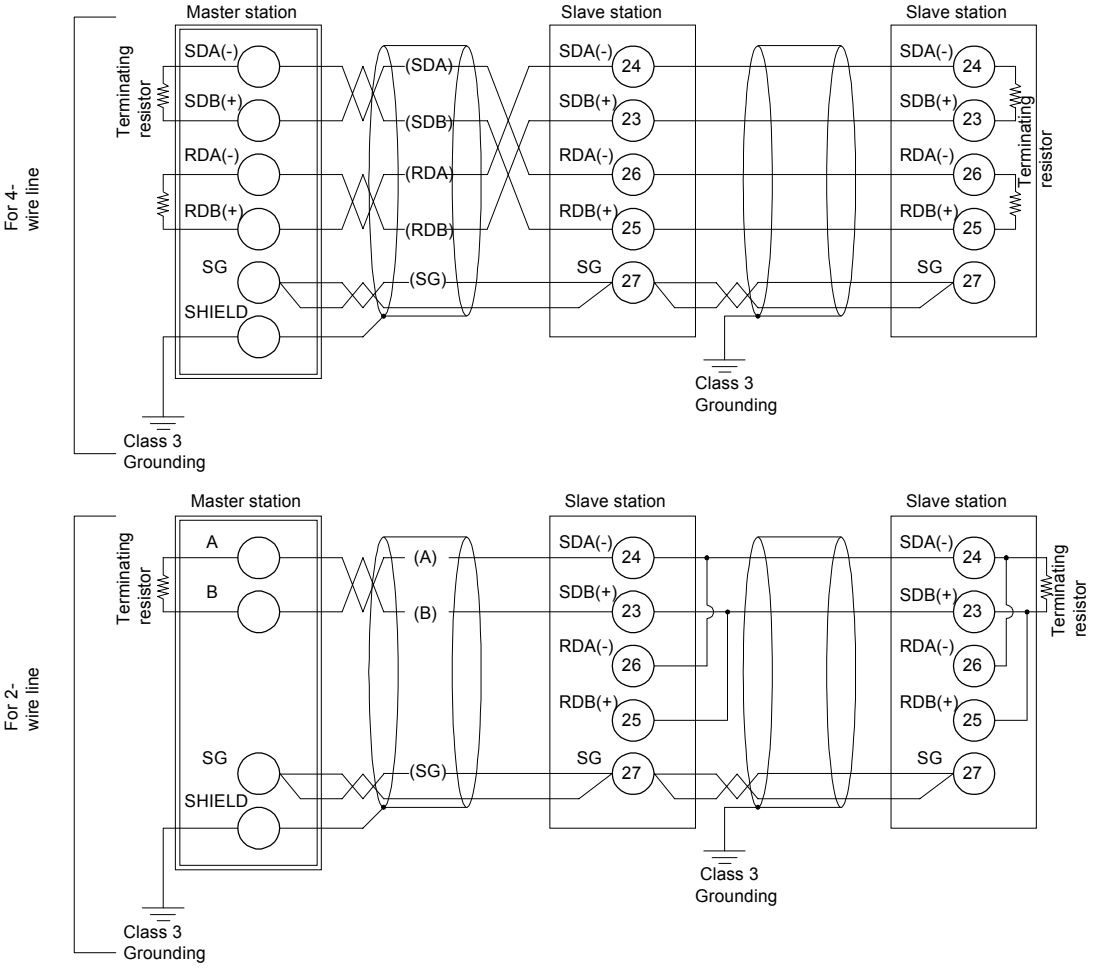

Fig. A3-13 Wiring for PC link/ladder communications

Part B: Names of Parts, Setting and Operation

CONTENTS

1. Components and Their Functions B1-1
1.1 External View and Structure B1-1
1.2 LED Display Organization B1-3
1.3 Operating Displays B1-4
1.4 Parameter Setting Displays B1-6
1.4.1 Operating Parameter Setting Displays B1-6
1.4.2 Setup Parameter Setting Displays B1-7
1.5 Security Functions B1-8
2. Preparations Prior to Operation B2-1
2.1 Setting the Setup Parameters B2-2
2.1.1 Setting and Changing the Password B2-2
2.1.2 Setting the I/O Functions B2-5
2.1.3 Setting the Control, Alarm and Communication Functions B2-8
2.2 Setting the Operating Parameters B2-11
2.2.1 Setting Alarm Setpoint Parameters B2-12
2.2.2 Setting Other Operating Parameters B2-13
3. Operation B3-1
3.1 Notes Before Operation B3-1
3.2 Understanding the Operating Displays B3-2
3.3 Confirmation of the limit output B3-3
3.4 Operation in Confirmation mode B3-4

1. Components and Their Functions

This chapter gives an external view of the UT350L and their structure and describes the displays.

1.1 External View and Structure

The figure below shows the external view of the indicator with alarms and its structure. The indicator with alarms shown in the figure is the UT350L.

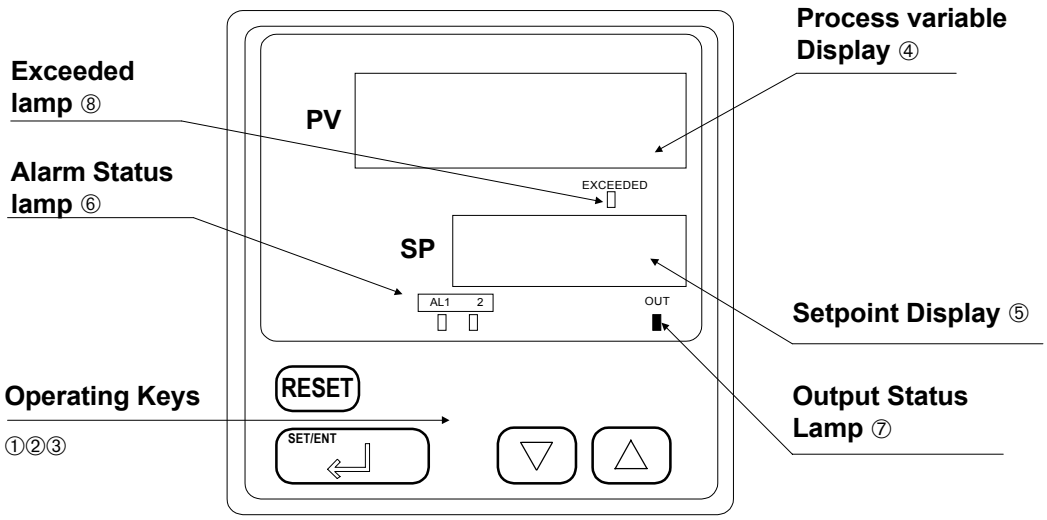

Fig. B1-1 UT350L External View and Structure

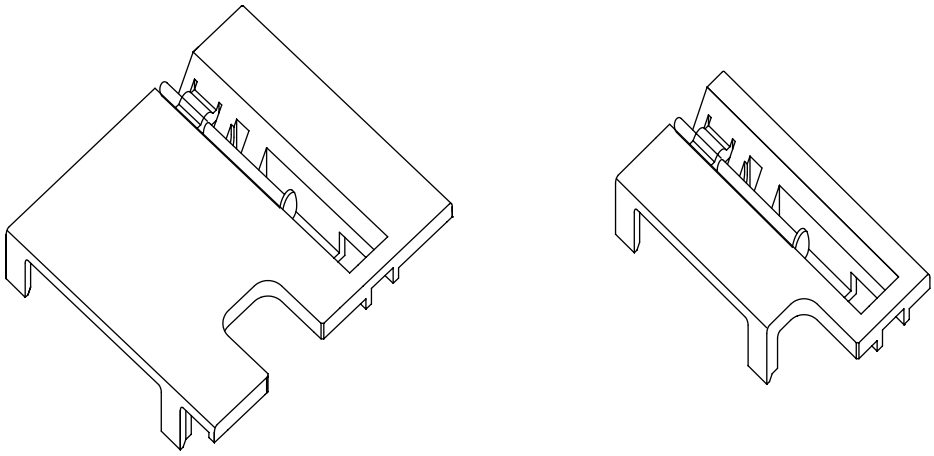

Large bracket　　Small bracket

Fig. B1-2 External View and Structure of the Mounting Brackets

- **Operating Functions**

No. in figure	Key	Function
①	SET/ENT	Used to switch the displays and to set the parameter value. Hold this key down for three seconds or more to switch between PV displays and operating parameter menu display.
②	▽ △	Used to change values while displaying the parameter setting displays. The [▼] key decreases the value and the [▲] key increases the value. Holding a key down increases incrementally the speed at which the value changes.
③	RESET	Used to confirm and reset the limit output and related parameters.

The keys click when pressed.

Press the keys firmly until you feel the key click.

NOTE

Do not use pointed objects (such as the point of a pen) to press the control keys as this could damage the keys. If keys are damaged in this way, return the unit to the manufacturer for replacement. (Repairs will be charged to the user.)

- **Display Functions**

No. in figure	Indicator/Display	Function
④	Process Variable (PV) display	Displays the measured input value (PV) or the error code if an error occurs.
⑤	Setpoint (SP) display	Displays the set value of a parameter.
⑥	Alarm status lamps	When alarms 1 to 2 occur, the respective alarm indicator lamps (AL1 to AL2) light (yellow).
⑦	Output status lamp	Light(green) to indicate the output status. Lights while the relay output is OFF.
⑧	Exceeded status lamp	Light(green) to indicate the exceeded status of PV. Lights while PV exceeds SP.

1.2 LED Display Organization

The UT350L displays consist of a four-digit numeric display that shows the measured input value (PV), a four-digit numeric display that shows the set value of parameters, and the alarm indicator lamps. The displays shown on the LED display are the PV and SP display, the confirmation mode displays, the operating parameter setting displays and the setup parameter setting displays.

- Operating displays is used during normal operation. Confirmation of limit output can be executed there.
- Confirmation mode displays allow the user to see and reset the limit status related parameters.
- The operating parameter setting displays show a set of parameters that can be modified during operation, including alarm setpoints.
- The setup parameter setting displays are used to specify the parameters that must be set before operation begins (setup parameters).

The figure below shows how to move between the different displays.

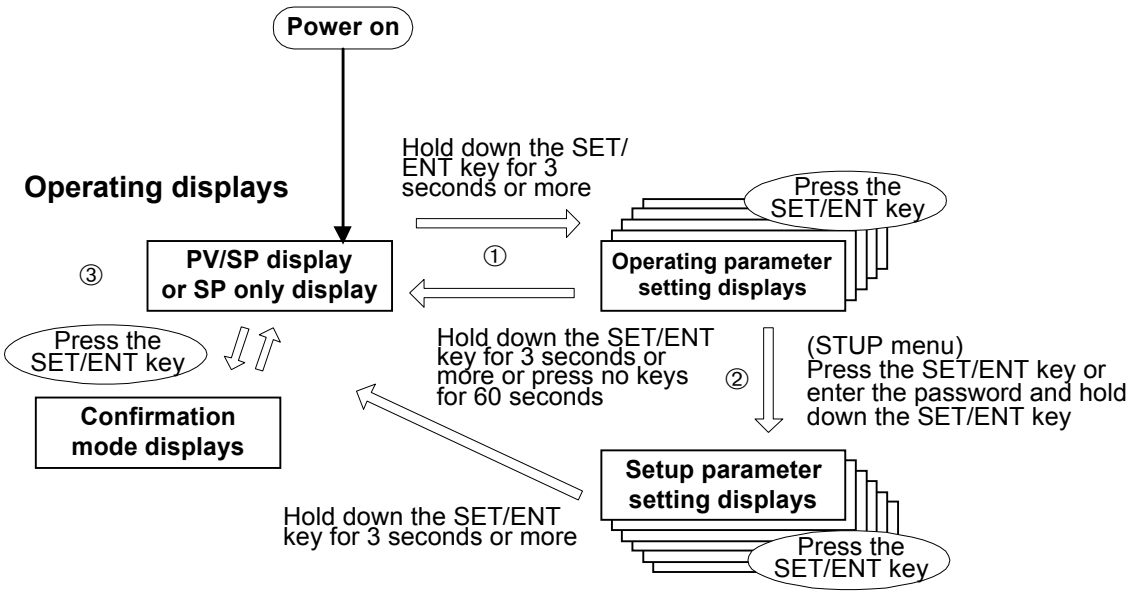

Fig. B1-3 LED Display Organization

① From an operating display, hold down the SET/ENT key for 3 seconds or more to move to the operating parameter setting displays. To then return to the PV display, hold down the SET/ENT key for 3 seconds or more. The display will automatically revert to the PV display if no keys are pressed for 60 seconds or more.

② Pressing the SET/ENT key from the “STUP” menu in the operating parameter setting display moves to the setup parameter setting displays. To return from a setup parameter setting display to an PV display, hold down the SET/ENT key for 3 seconds or more. The display will automatically revert to the PV display if no keys are pressed for 60 seconds or more.

③ Pressing the SET/ENT key from a PV display shows the confirmation mode displays.

1.3 Operating Displays

The displays mainly used during normal operation are “PV and SP display” and the “SP only display”. You can switch the displays with the SET/ENT key.

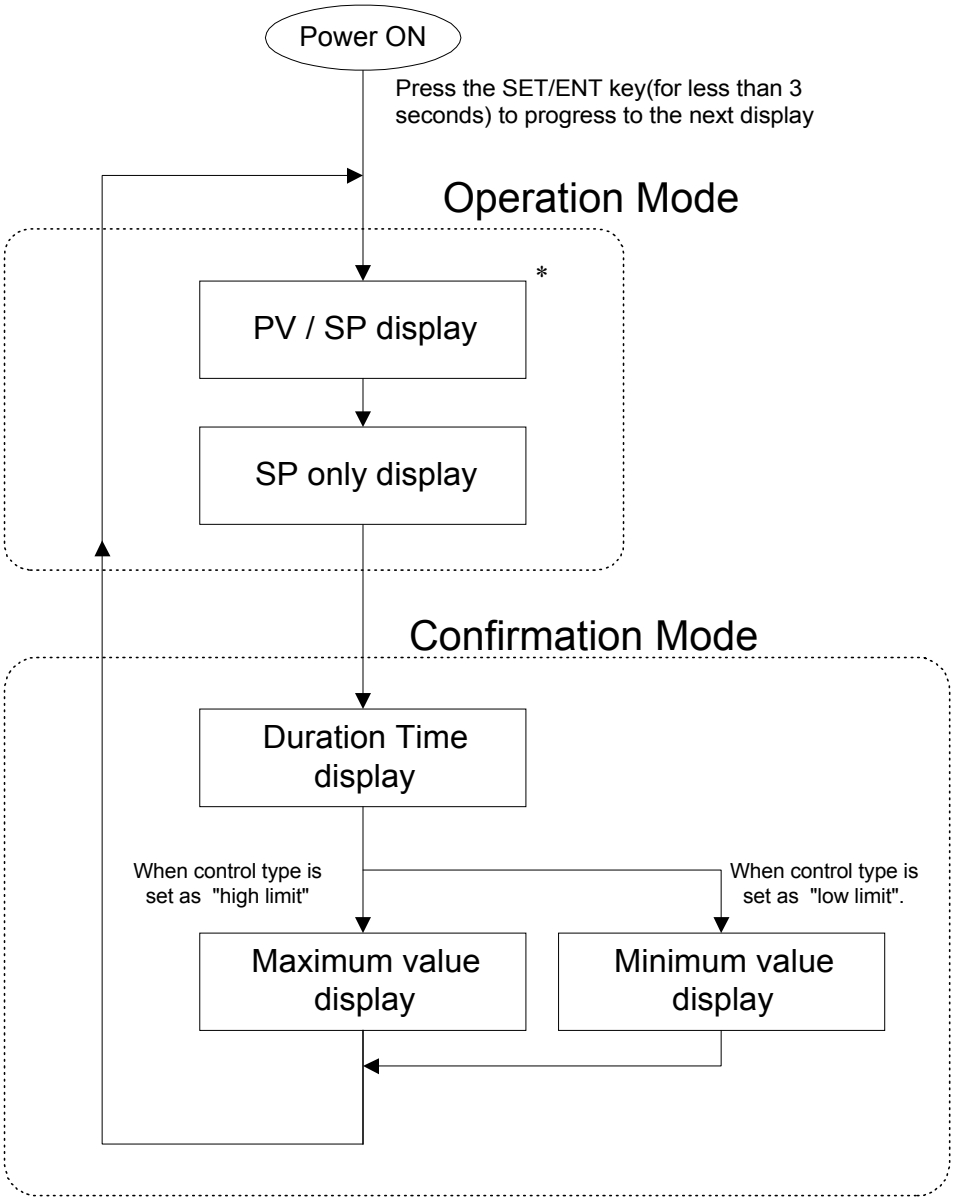

Fig. B1-4 Display Flow During Operation

* You can progress the display backword in operation mode depend on the “OP.SL” parameter.

- **Operating display**

1) PV/SP display

The PV/SP display is the first display shown when the controller is powered on when "OP.SL" parameter is "0". The target setpoing can be changed from the PV/SP display.

Display Measured input value and target setpoint

Operation ▼ and ▲ key to change target sepoint and SET/ENT key to confirm.

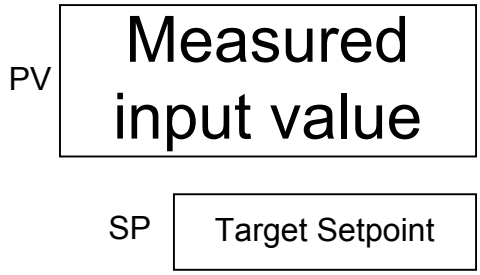

2) SP only display

When "OP.SL" parameter is "1", SP only display appears first when the controller is powered on. This display does not show measured input value. Operation is same as PV/SP display.

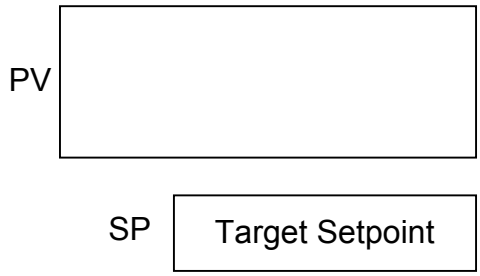

3) Confirmation mode displays

The Time and maximum/minimum value displays wll appear in the confirmation mode. The value is displayed in the SP display and confirmed(reset) by the RESET key.

Display Name of the parameter and the value stored in the memory.

Operation RESET key to confirm(reset) the value.

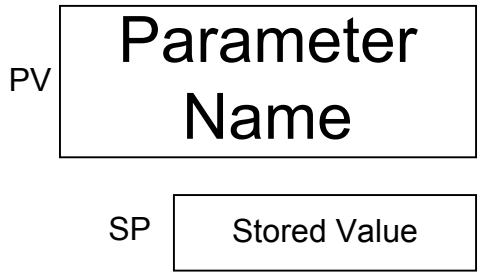

1.4 Parameter Setting Displays

1.4.1 Operating Parameter Setting Displays

Parameters with settings that can be changed during operation of the UT350L are called operating parameters. The values of these parameters are set in the operating parameter setting displays.

The operating parameter setting displays are made up of the parameter setting displays listed in the "OP.PA" menu. One operating parameter can be specified in each display.

The "STUP" menu in the operating parameter specification menu provides access to the setup parameter setting displays.

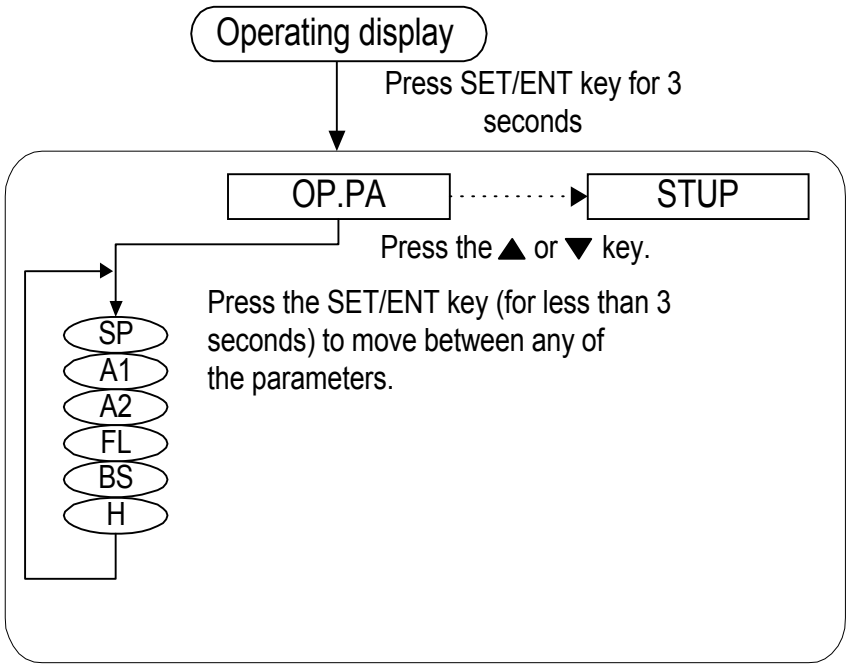

Fig. B1-5 Organization of Operating Parameter setting displays

1.4.2 Setup Parameter Setting Displays

Parameters that must be specified before operation of UT350L starts are called setup parameters. The values of these parameters are set in the setup parameter setting displays.

The setup parameter setting displays are made up of menu displays and parameter setting displays. One setup parameter can be specified in each parameter setting display.

To move to the setup parameter setting displays, you must first go into the operating parameter setting displays. In the “STUP” menu, press the SET/ENT key to move to the setup parameter specification

displays. In the initial setup parameter setting display, “FUNC” and “IO” are listed under the STUP menu. The IO menu contains the “PWD” parameter used for setting the password.

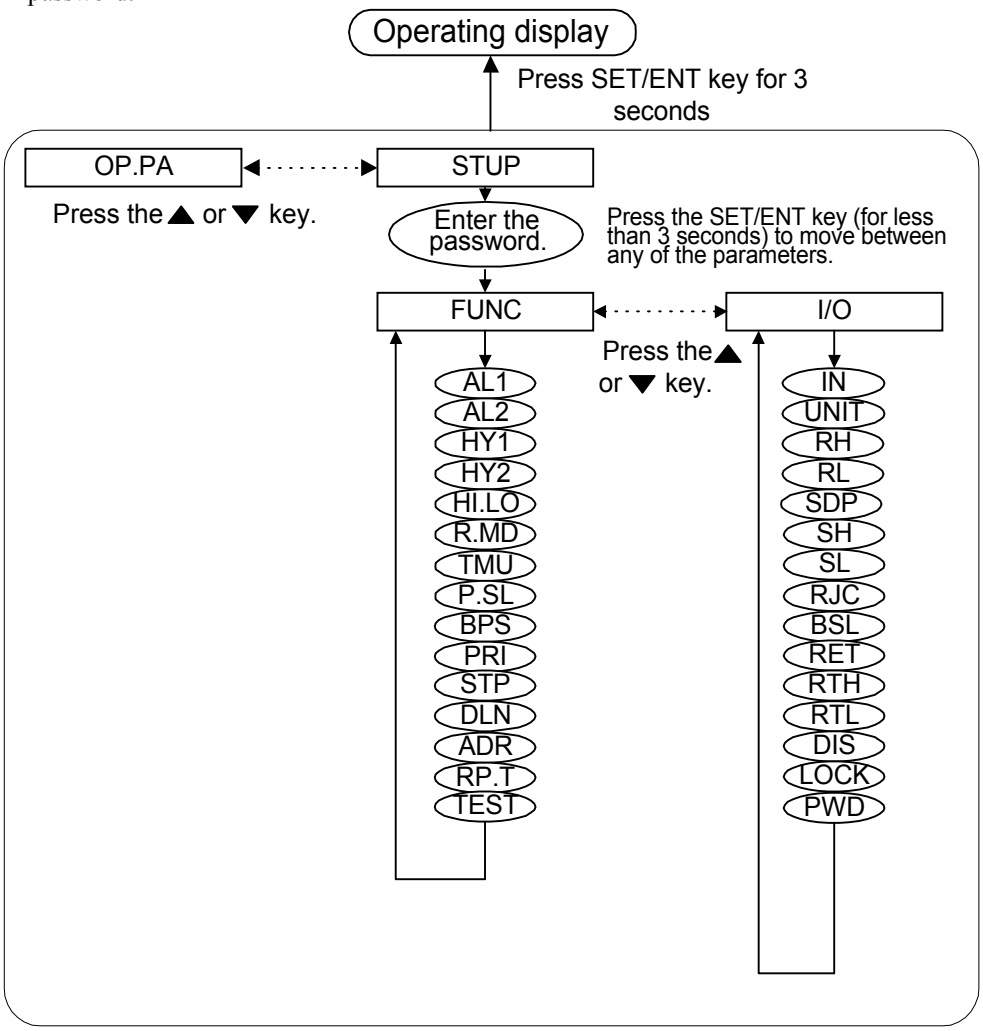

Fig. B1-6 Organization of Setup Parameter setting displays

1.5 Security Functions

1) **Password Function**

To prevent inadvertent modification of the setup parameters, the Green Series instruments are provided with a password-based security function. Once you have specified a password in the setup parameter setting display, you can no longer access the setup parameter setting display without first entering the correct password. If you forget your password, you must return the indicator with alarms to the manufacturer for reprogramming. (All work will be charged to the customer.)

IMPORTANT

When you requested the password deleting service mentioned above, all the parameters will be reset to the default value. It is recommended to record all the user-set parameter values of the instrument.

Setup Parameter

- Password (PWD): 4-digit number (1 to 9999; 0 indicates no password.)

2) **Keylock Function**

Use the keylock parameter (LOCK) to invoke the keylock function. This function disables operation of the front panel keys during operation and prevents the parameter setting displays from being used. The table below lists the items covered by the keylock function.

Table B1-1 Keylock Protected Keys

Value of the parameter LOCK	Locked function	Effect
ON	Parameter changes prohibited	Set values of the operating parameters and setup parameters cannot be changed (except for the LOCK parameter).

Setup Parameters

- Keylock parameter LOCK: OFF, ON

2. Preparations Prior to Operation

Use the procedure shown below to prepare the indicator for operation.

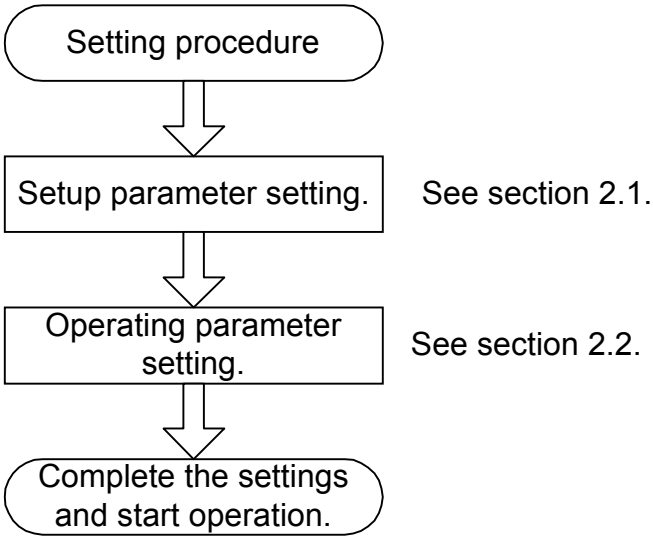

The displaying order of setup parameter setting displays and operating paremeter setting displays are shown in the figures of "1.4.2 Setup Parameter Setting Displays" and "1.4.1 Operating Parameter Setting Displays" respectively. The figures also shoow the keys used to transfer between the displays. Make use of these figures in order to reach the desired parameter setting displays.

2.1 Setting the Setup Parameters

IMPORTANT

Always set the setup parameters before proceeding with other preparations for operation. Also, when setting the setup parameters, the I/O function parameters must be specified before the alarm function parameters.

For information on the values that can be set for each parameter, see “Appendix 2 Setup Parameter Table.” The list of setup parameters has a space for user-defined settings, and users are encouraged to record the parameter settings they have specified in the space provided.

Depending on the model and optional specifications, some parameters may not be displayed. See “Appendix 2 Setup Parameter Table” for information on which parameters are displayed or not.

2.1.1 Setting and Changing the Password

This section describes how to set and change the password used to move from the operating parameter setting displays to the setup parameter setting displays.

NOTE

When you set the PWD (password) parameter, be sure to memorize your password. The next time you wish to set the setup parameters, you will need your password to access the setup parameter setting displays. If the password you enter does not match the password set previously, you will not be able to move from an operating parameter setting display to the setup parameter setting displays. To delete a password, the indicator must be returned the manufacturer's service outlet for reprogramming. (All work will be charged to the customer.)

IMPORTANT

When you requested the password deleting service mentioned above, all the parameters will be reset to the default value. It is recommended to record all the user-set parameter values of the instrument.

[Procedure]

1) Power on the controller. When the controller is powered on, the “PV display” appears .

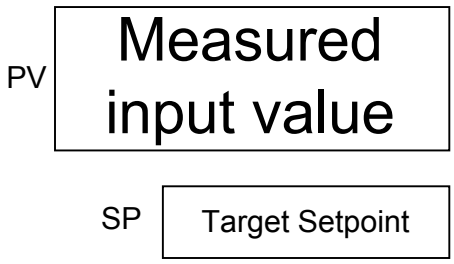

2) Hold down the SET/ENT key for 3 seconds or more to display the “OP.PA” operating parameter menu.

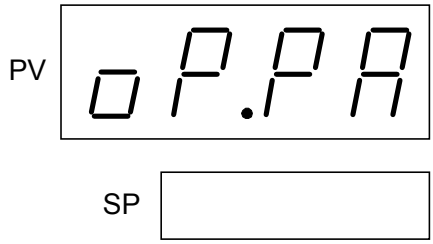

3) Press the △ or ▽ key once to display the “STUP” menu.

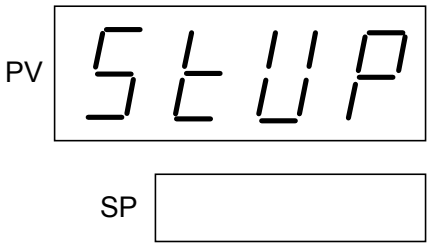

4) Press the SET/ENT key. The password reference display appears as shown in the right figure.

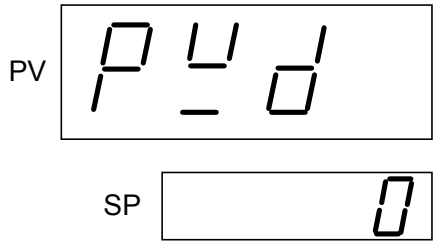

5) If you have not yet set a password, press the SET/ENT key again to move to the next display. If you have already set a password, use the △ or ▽ key to display the password and then press the SET/ENT key.

6) Setup parameter setting menu “FUNC” is displayed (see figure at right). Press the △ or ▽ key once. Then, another setup parameter setting menu “I/O” appears(see lower right figure).

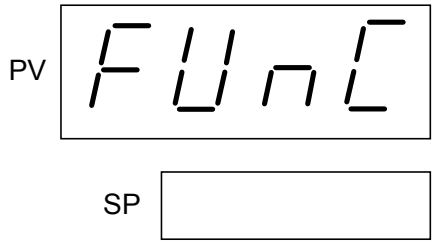

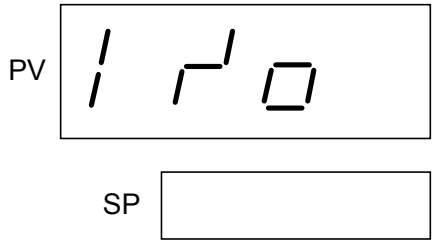

7) Press the SET/ENT key once. “IN” is displayed.

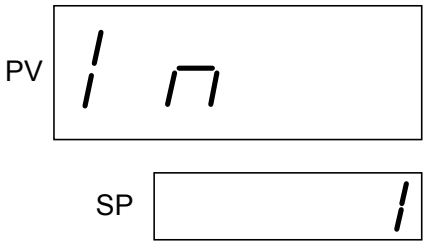

8) Press the SET/ENT key repeatedly until “PWD” appears in the PV display unit. Either “0” (no password) or the current password is displayed in the Parameter display.

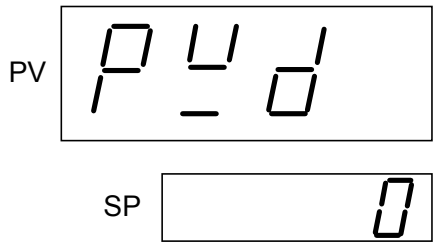

9) To set or change the password, use the △ and ▽ keys to set a number between 1 and 9999.

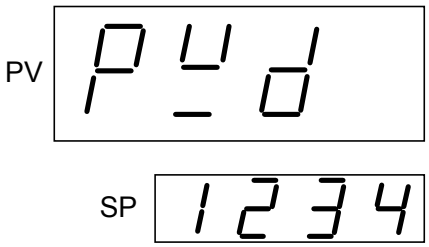

10) Press the SET/ENT key again to store the password.

To return to the “PV display”, hold down the SET/ENT key for 3 seconds or more.

2.1.2 Setting the I/O Functions

This section describes how to set the parameters that relate to input and output of the indicator. The table below lists the parameters that can be set. The LED display symbols shown in the table are the symbols that appear on the actual indicator's PV display unit. The value set for each parameter appears in the Parameter display unit.

Table B2-1 I/O Parameters

Symbol	Details	LED Display Symbol	Symbol	Details	LED Display Symbol
IN	Input type	In	RET	Retransmission output type selection	rEt
UNIT	Input unit designation	Unit	RTH	Maximum of retransmission output range	rtH
RH	Maximum of measured input range	rH	RTL	Minimum of retransmission output range	rtL
RL	Minimum of measured input range	rL	DIS	DI function selection	diS
SDP	Input decimal point position	SdP	LOCK	Keylock	LoCK
SH	Input scale upper limit	SH	PWD	Password	Pwd
SL	Input scale lower limit	SL			
RJC	Input RJC on/off	rJC			
BSL	Input burnout operation selection	bSL			

[Procedure]

1) Power on the indicator. When the indicator is powered on, the “PV display” appears .

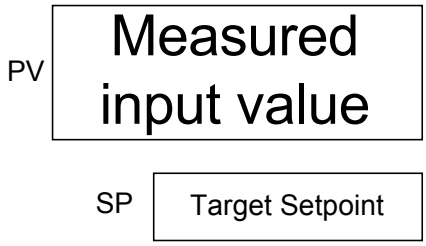

2) Hold down the SET/ENT key for 3 seconds or more to display the “OP.PA” operating parameter menu.

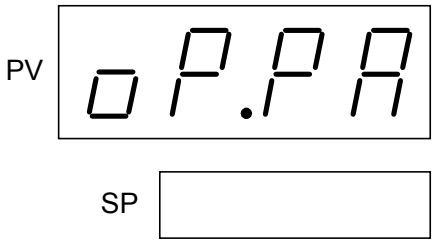

3) Press the △ or ▽ key once to display the “STUP” menu.

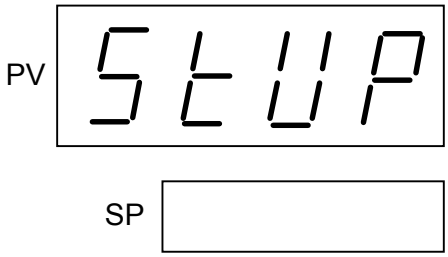

4) Press the SET/ENT key. The password reference display appears as shown in the right figure.

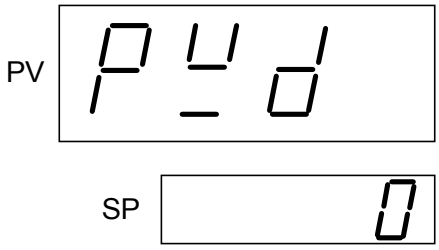

5) If you have not yet set a password, press the SET/ENT key again to move to the next display. If you have already set a password, use the △ or ▽ key to display the password and then press the SET/ENT key.

6) Setup parameter setting menu “FUNC” is displayed (see figure at right). Press the △ or ▽ key once. Then, another setup parameter setting menu “I/O” appears(see lower right figure).

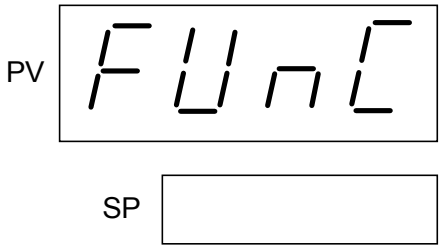

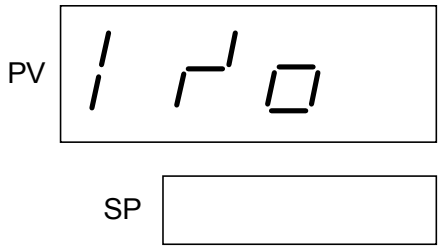

7) Pressing the SET/ENT key displays "IN" as shown in the figure at right. The value currently set appears in the Parameter display.

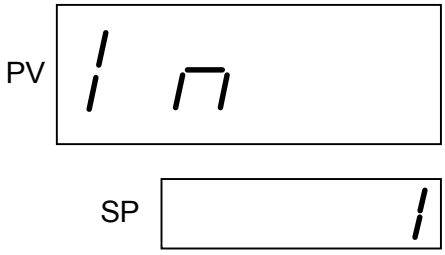

8) To change the current setting, press the △ or ▽ key to set the desired value. The figure at right shows an input type setting of "51", which is the value set for a input voltage of 0 to 10 volts DC.

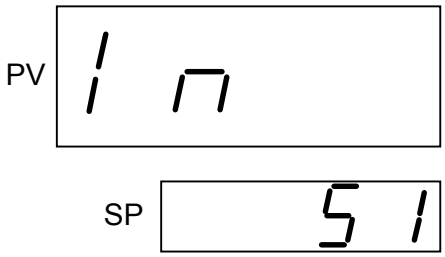

9) Press the SET/ENT key again to store the setting.

10) Pressing the SET/ENT key again displays the next parameter (see figure at right). Repeat steps 7) to 9) above to set subsequent parameters. The Parameter display unit sequence is as shown in "Table B2-1 I/O Parameters."

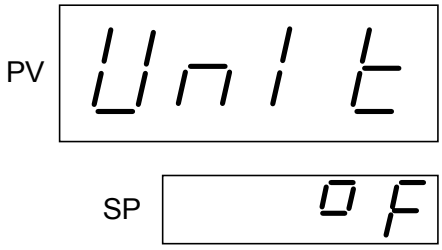

To return to the "PV display", hold down the SET/ENT key for 3 seconds or more.

2.1.3 Setting the Control, Alarm and Communication Functions

This section describes how to set the parameters that relate to the controller's control, display, alarm, and communication operations.

The table below lists the parameters that can be set. The LED display symbols shown in the table are the symbols that appear on the actual indicator's PV display. The value set for each parameter appears in the Parameter display unit.

Table B2-2 Function Parameters

Symbol	Details	LED Display Symbol	Symbol	Details	LED Display Symbol
AL1	Alarm type 1	AL1	P.SL	Protocol selection	P.SL
AL2	Alarm type 2	AL2	BPS	Communication speed	bPS
HY1	Alarm 1 hysteresis	HY1	PRI	Parity	Pri
HY2	Alarm 2 hysteresis	HY2	STP	Stop bit	StP
HI.LO	Limit control type Selection	HI.Lo	DLN	Data length	dLn
R.MD	Restart Mode	r.md	ADR	Address	Adr
OP.SL	Operating displays Selection	oP.SL	RP.T	Minimum response time	rP.t
TMU	Time Unit	tmU	TEST	Note: Do not use this parameter.	tESt

[Procedure]

1) Power on the indicator. When the indicator is powered on, the “PV display” appears .

PV: Measured input value

SP: Target Setpoint

2) Hold down the SET/ENT key for 3 seconds or more to display the “OP.PA” operating parameter menu.

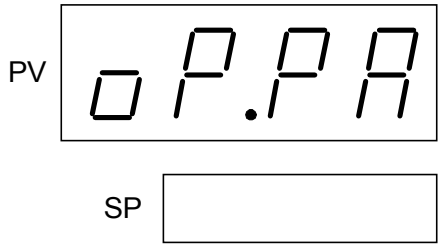

3) Press the △ or ▽ key once to display the “STUP” menu.

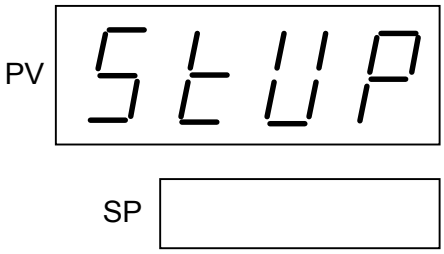

4) Press the SET/ENT key. The password reference display appears as shown in the right figure.

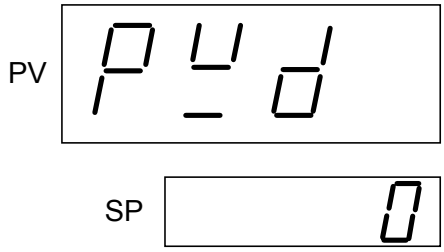

5) If you have not yet set a password, press the SET/ENT key again to move to the next display. If you have already set a password, use the △ or ▽ key to display the password and then press the SET/ENT key.

6) Setup parameter setting menu display “FUNC” is displayed.

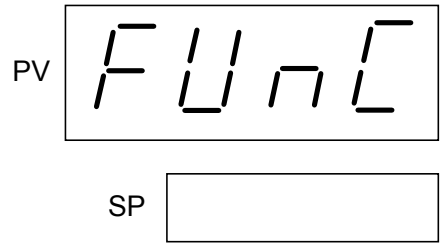

7) Pressing the SET/ENT key displays "AL1". The current setting appears in the Parameter display unit.

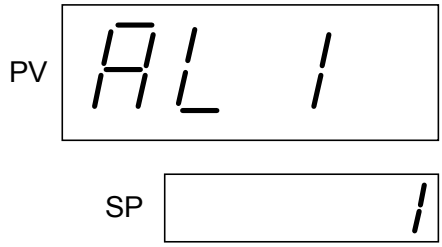

8) To change the current setting, use the △ and ▽ keys to set the desired number. In the example shown in the figure at right, a value of 1 is set as the PV high limit alarm for the alarm type 1 (AL1).

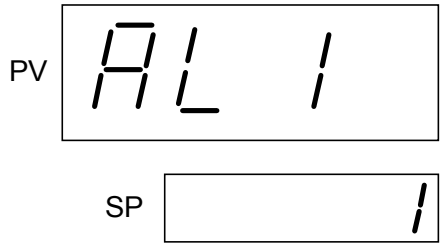

9) Press the SET/ENT key again to store the setting.

10) Pressing the SET/ENT key again displays the next parameter (see figure at right). Repeat steps 7) to 9) above to set subsequent parameters. The Parameter display unit sequence is as shown in "Table B2-2 Function Parameters."

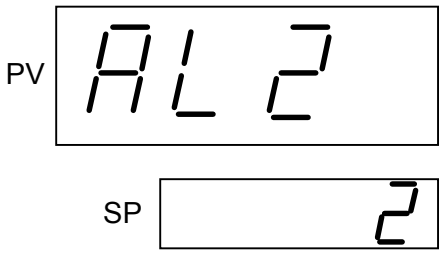

To return to the "PV display", hold down the SET/ENT key for 3 seconds or more.

2.2 Setting the Operating Parameters

Parameters that can be set or modified during controller operation are referred to as operating parameters.
This section describes how to specify parameters such as the setpoints of the alarms.
The parameters that can be set are listed in the tables below. The LED display symbols shown in the table are the symbols that appear on the actual indicator's PV display.

IMPORTANT

You are advised not to set the operating parameters until you have finished setting the setup parameters. The values of operating parameters vary depending on specific setup parameter settings.
See “Appendix 1 Operating Parameter Table” for information on the values that can be set for each parameter. The operating parameter table has a space for user-settings, and users are encouraged to record the user-set values in the space provided.

Table B2-3 Operating Parameters

Symbol	Details	LED Display Symbol
SP	Setpoint	SP
A1	Alarm 1 setpoint	A1
A2	Alarm 2 setpoint	A2
FL	Measured input filter	FL
BS	Measured input bias	bS
H	On/off control hysteresis	H

2.2.1 Setting Alarm Setpoint Parameters

This section describes how to specify alarm setpoints.

[Procedure]

1) Power on the indicator. When the indicator is powered on, the "PV display" appears .

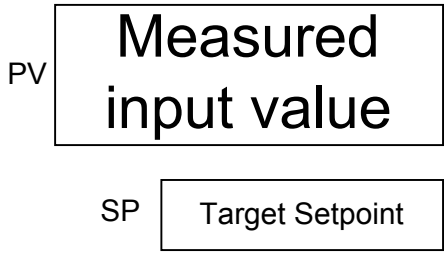

2) Hold down the SET/ENT key for 3 seconds or more to display the "OP.PA" operating parameter menu as shown in the figure at right.

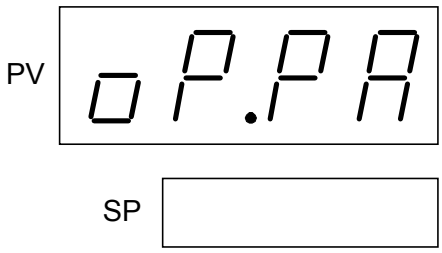

3) Press the SET/ENT key to display "A1". The current setpoint appears in the Parameter display unit.

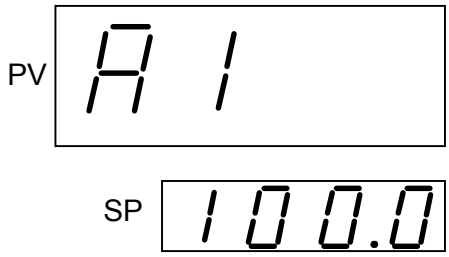

4) To set or change the setpoint, use the △ and ▽ keys to set the desired value. The figure at right shows a value of 90 set as the alarm 1 (A1) setpoint.

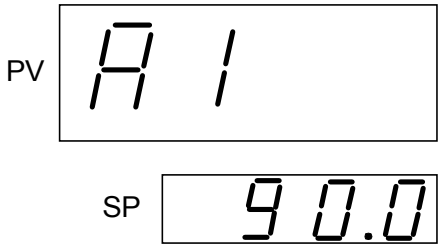

5) Press the SET/ENT key again to store the setting.

6) Pressing the SET/ENT key again displays the next parameter (see figure at right). “A2” and “A3” are displayed sequentially and can be set in the same way as A1.

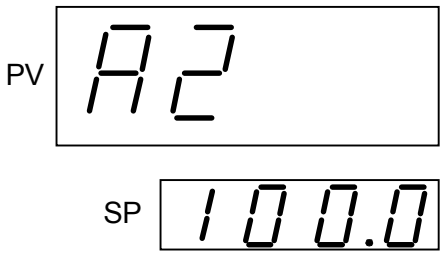

To return to the “PV display”, hold down the SET/ENT key for 3 seconds or more.

2.2.2 Setting Other Operating Parameters

Use the procedures described in section 2.2.1 to set other operating parameters other than alarm setpoints.

When the “OP.PA” operating parameter menu appears, pressing the SET/ENT key displays the parameters in the sequences shown in Table B2-3. Display the parameter to be set, use the △ and ▽ keys to set a value, and press the SET/ENT key to store the setting.

3. Operation

3.1 Notes Before Operation

(1) Before starting operation, refer to Part A of this manual and complete the required installation and connection work. Then ensure that the parameter settings described in "2. Preparations Prior to Operation" in Part B have also been completed.

(2) The controller is ready for operation as soon as it is powered on.

(3) The controller has no power switch.
The user should use a separate external switch as required.

3.2 Understanding the Operating Displays

The “PV/SP display”, “SP only display”and the displays in the confirmation mode are the operating displays mainly used in limit control operation.
Use the SET/ENT key to switch between operating displays.

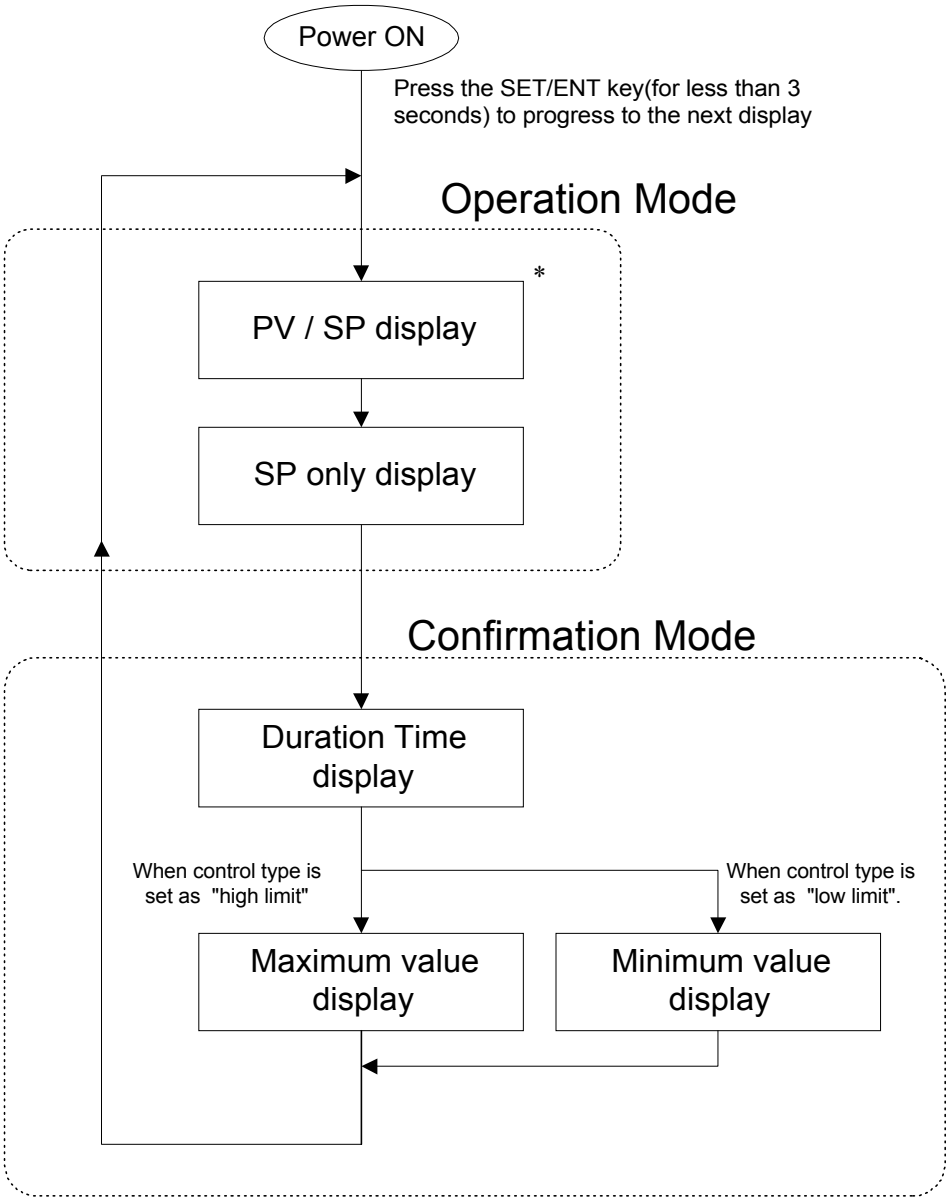

Fig. B3-1 Operating Display Flow

* You can progress the display backword in operation mode depend on the “OP.SL” parameter.

3.3 Confirmation of the limit output

When the Process variable(PV) exceeds the setpoint for limit control(SP), The Exceeded lamp lights, and also the output lamp is light. Exceeded lamp is off when the PV recovers to the nomral status where PV doesn't exceed SP, while OUTPUT lamp keeps lit until the confirmation is done.
Confirmation of the limit output can be done either by a front panel or external contact. Here explains the way to reset by key operation .

See "3.1.1 Limit control " in Part C for more information on the control action.

[Procedure]

1) Display the "PV/SP display" or "SP only display".

2) Confirm that the EXCEEDED lamp is off and the OUT lamp is lit.
OUT status cannot be reset while the EXCEEDED lamp is lit.

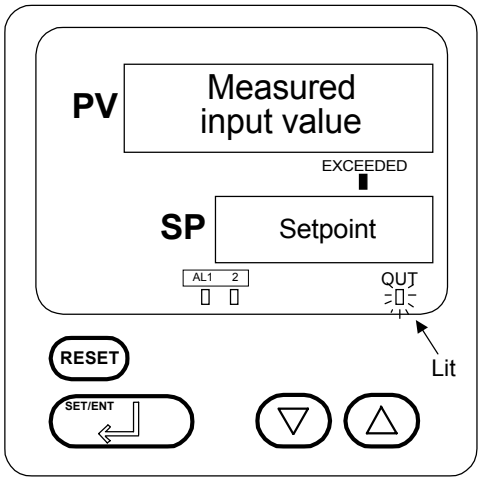

3) Press the RESET Key for about one second. Confirm that the OUT lamp becomes OFF.
The output has been on.

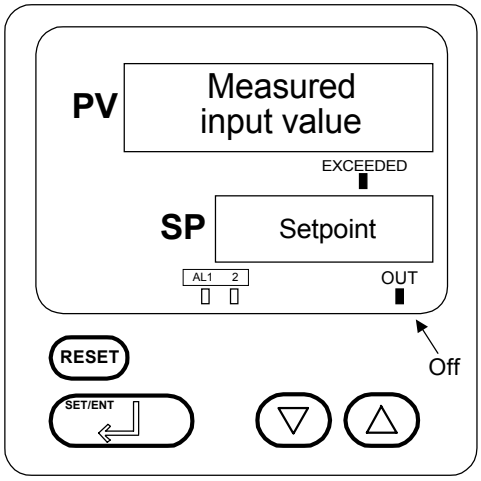

3.4 Operation in Confirmation mode

Following parameters can be seen in the confirmation mode. These parameters can be confirmed and reset by pressing the RESET key at each parameter display.

- Duration time
- Maximum value of PV
- Minimum value of PV

[Procedure]

1) Display the “PV/SP display”.

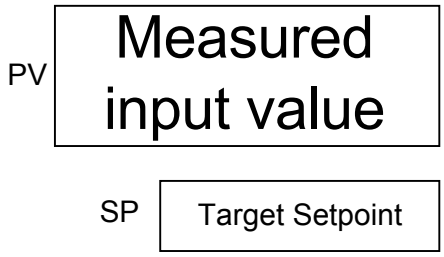

2) Press the SET/ENT key for less than 3 seconds to display the “TIME” Duration time display as shown in the figure at right.
The lower display shows the duration time after PV exceeds SP. If “0.00”shows here,. PV havn’t exceeded SP, or the time is already confirmed.

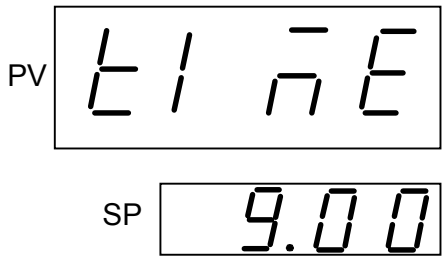

Value on the SP Display	status
“**NN.NN**” (Duration time) “hour.min” or“min.sec” (see note)	PV exceeds SP
“**0.00**”	PV does not exceeds SP and confirmation is already done, or PV has not exceeded SP since the power was turned on.

Note : Selected by the set-up parameter “TMU”.

3) If you want to confrim and reset the duration time, press RESET key for about one second.
The duration time will be reset.
If you don’t want to reset the time, just move to the next step.

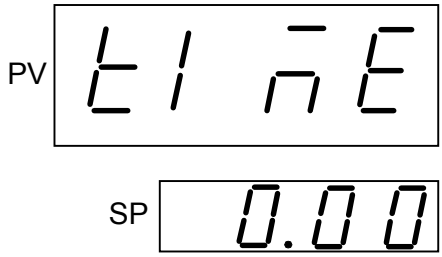

When the instrument is specified as **high limit** type, goes to step 4).
When the instrument is specified as **low limit** type, goes to step 5)

4) <For “high limit” type >

Press SET/ENT key. If the controller is specified as High limit type , “HI” will be displayed

The maximum value of PV that has been measured up to now is shown in the SP display.

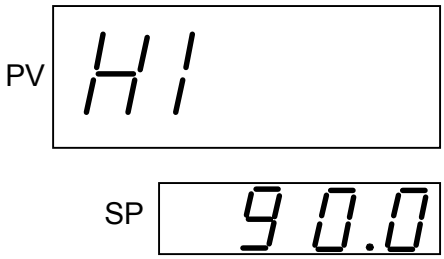

(“90.0” in the right figure is just an example.).

Press RESET key if reset is designated

If you don’t want to reset just go to the next step.

5) < For “low limit” type >

Press the SET/ENT key. If the instrument is specified as a Low limit type, “Lo” will be displayed. The minimum value of PV that has been measured up to now is displayed in the SP display unit.

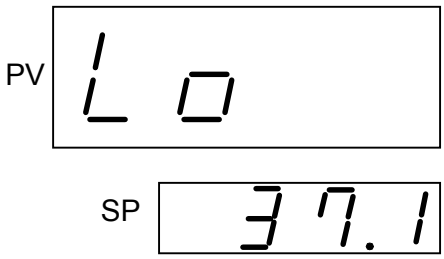

Press RESET key here if reset is designated

If you don’t want to reset just go to the next step.

6) To return to the “PV/SP display”, press the SET/ENT key.

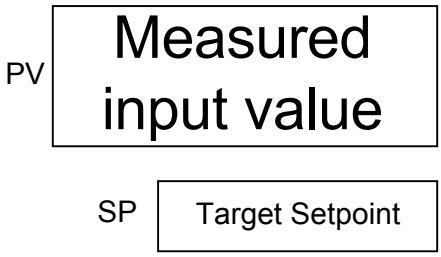

Part C:
Basic Functions

CONTENTS

1. Function C1-1
1.1 Function of the Limit control C1-1
2. Input Computation Functions C2-1
2.1 Input Computation C2-1
2.1.1 Input Type Selection C2-1
2.1.2 Input Range Conversion C2-3
2.1.3 Measured Input Bias C2-3
2.1.4 Measured Input Filter C2-4
3. Limit Control Functions C3-1
3.1 Limit control action C3-1
3.1.1 Limit control C3-1
3.1.2 Power on status C3-1
3.1.3 At Power-off C3-3
3.2 Parameters in the Confirmation Mode C3-3
3.2.1 Duration Time C3-3
3.2.2 Maximum / Minimum value C3-3
4. Retransmission Output C4-1
5. Alarm Function C5-1
5.1 Alarm Output C5-1
5.2 Fault Diagnostic Alarm C5-3
5.3 Fail Output C5-3
6. Behavior After Power Failure Recovery C6-1

1. Function

1.1 Function of the Limit control

The functional block diagram of UT350L is shown in the figure below.

- **Functional block diagram**

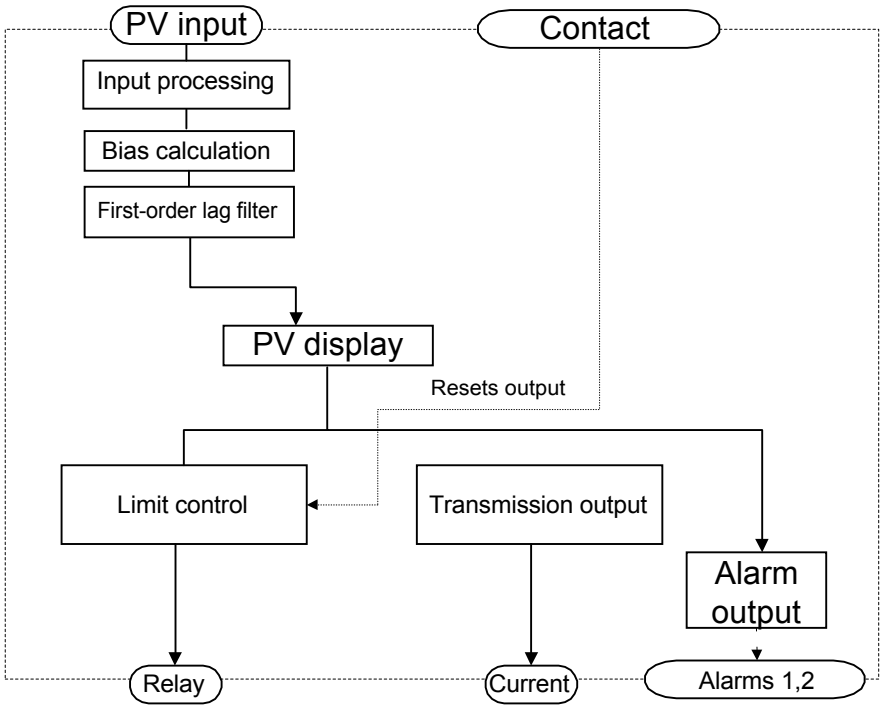

Fig. C1-1 Functional Block Diagram

- **I/O Computation**

Input is universal input, which can accept signals from a thermocouple, resistance temperature detector and DC voltage source. First-order lag filter and bias calculation can be applied to the input.

- **Limit control type**

Type of the limit control are to be specified by the setup parameter “HI.LO”.

Setup Parameters

- Control type selection HI.LO :
  HI : High limit control (Exceeded status is detected when PV goes higher than SP.)
  LO : Low limit control (Exceeded status is detected when PV goes lower than SP.)

- **Confirmation of Limit status**

Limit output and the related parameter such as duration time and Maximum/Minimum PV value can be confirmed by a front key operation.. It is possible to confirm limit output by using contact oinputs. The way of confiramtion is set by the Setup parameter DIS.

Table C1-1 shows the items which can be confirmed by front key or external contacts according to the setting of DIS.

Setup Parameters

- The way of confirmation : DIS
  KEY: Confirmation can be done by front key operation
  DI : Confirmation can be done by an external contact.
  (Only limit output can be confirmed.)

Table C1-1 Confirmation function according to DIS setting

Item to be confirmed	DIS= KEY		DIS= DI	
	KEY	DI	KEY	DI
Output relay	Able	Disable	Disable	Able
Duration time	Able	Disable	Able	Disable
Maximum/Minimum value	Able	Disable	Able	Disable

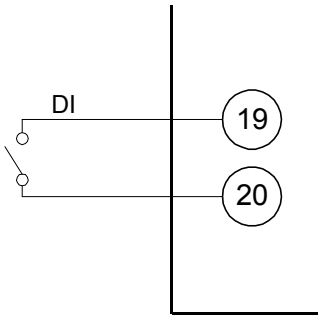

Fig. C1-2 External contact

- **Alarm Outputs**

Alarms are output to the contact outputs (ALM1 and ALM2).

Table C1-2 Assignment of External Contact Outputs

Symbol	Output type	Function
ALM1	Relay	Alarm 1 output
ALM2	Relay	Alarm 2 output

2. Input Computation Functions

2.1 Input Computation

The input processes shown below are performed in the input computation section on a process variable input signal. Input bias or filter can be selected according to the application.

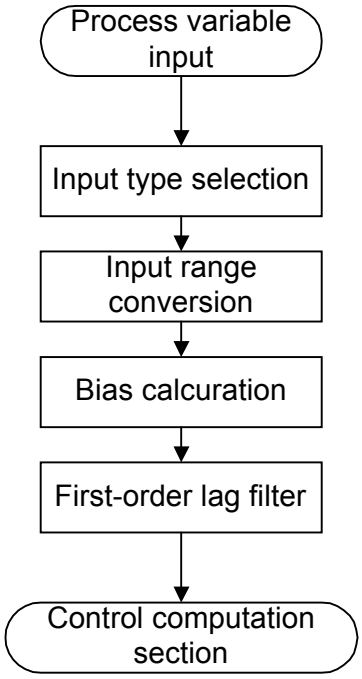

Fig. C2-1 Block Diagram of Input Computation Processes

2.1.1 Input Type Selection

The input type is set and the linear rise is computed with selection of input type. The input types are shown in the table below.

Setup Parameters

- Input type selection IN: Sets the instrument input range codes shown in the table below.
- Unit selection UNIT: Sets degrees Celsius only.
- Burnout protection selection for process variable input BSL: Sets burnout protection for each input in the case of thermocouple, RTD, and standard signal inputs.
  0 = no burnout protection; 1 = upscale; 2 = downscale
  The PV value during upscale is 105%.
  Transmission output and alarm functions operate with PV value of -5%.

- Reference junction compensation RJC:
  Sets the on/off status of reference junction compensation in the case of thermocouple input. Set the reference junction compensation function off when an external reference junction compensator (0°C) or the like is used to perform precise compensation.

Table C2-1 Input Range Codes

Input classification	Input type	Instrument input range		Instrument input range code
Thermocouple	K	-200 to 1370°C	-300 to 2500°F	1
		-199.9 to 999.9°C	0 to 2300°F	2
		-199.9 to 500.0°C	-199.9 to 999.9°F	3
	J	-199.9 to 999.9°C	-300 to 2300°F	4
	T	-199.9 to 400.0°C	-300 to 750°F	5
		0.0 to 400.0°C	-199.9 to 750.0°F	6
	B	0 to 1800°C	32 to 3300°F	7
	S	0 to 1700°C	32 to 3100°F	8
	R	0 to 1700°C	32 to 3100°F	9
	N	-200 to 1300°C	-300 to 2400°F	10
	E	-199.9 to 999.9°C	-300 to 1800°F	11
	L	-199.9 to 900.0°C	-300 to 1300°F	12
	U	-199.9 to 400.0°C	-300 to 750°F	13
		0.0 to 400.0°C	-199.9 to 750.0°F	14
	W	0 to 2300°C	32 to 4200°F	15
	Platinel 2	0 to 1390°C	32 to 2500°F	16
	PR20-40	0 to 1900°C	32 to 3400°F	17
	W97Re3-W75Re25	0 to 2000°C	32 to 3600°F	18
RTD	JPt100	-199.9 to 500.0°C	-199.9 to 999.9°F	30
		-150.0 to 150.0°C	-199.9 to 300.0°F	31
	Pt100	-199.9 to 640.0°C	-300 to 1180°F	35
		-199.9 to 500.0°C	-199.9 to 999.9°F	36
		-150.0 to 150.0°C	-199.9 to 300.0°F	37
Standard signal	0.4 to 2V	0.400 to 2.000	The ranges to the left can be scaled. -1999 to 9999 -199.9 to 999.9 -19.99 to 99.99 -1.999 to 9.999	40
	1 to 5V	1.000 to 5.000		41
DC voltage	0 to 2V	0.000 to 2.000		50
	0 to 10V	0.00 to 10.00		51
DC voltage	-10 to 20mV	-10.00 to 20.00		55
	0 to 100mV	0.0 to 100.0		56

2.1.2 Input Range Conversion

With input range conversion, the high and low limits of the process variable range can be set to any value within the instrument range determined by selection of the input type. For example, the instrument range of type-J thermocouple input is -200.0 to 1200.0 °C. If you want to set the process variable input range of the control function to 200.0 to 800.0 °C, you can set 200.0 to 800.0 °C with input range conversion. Input range conversion can also be done for mVDC, DCV and standard signal inputs (for example, a -10 to 20 mV range can be set to 0 to 10 mV)

Setup Parameters

- Input range high limit RH, low limit RL: Set values within the instrument range.
- Analog input decimal point location SDP: Sets the number of digits to the right of the decimal point in the case of DC voltage input. 0 = no digits after the decimal point; 1 = 1 digit after the decimal point; 3 = 3 digits after the decimal point, etc. Setting is not needed in the case of thermocouple and RTD inputs since the decimal point is determined automatically.
- Input scaling high limit SH, low limit SL: Set the commercial scale of the DC voltage input: 0.0 to 600.0 t/h, 4.0 to 12.0 pH, etc. The default is 0.0 to 100.0 (no unit).

2.1.3 Measured Input Bias

Bias can be added to the measured input. The PV input bias is used mainly to reduce the display dispersion.

Inernal measured input value =Measured input + Measured input bias value

Operating Parameter

- Measured input bias BS: EUS (-100.0 to 100.0%)

2.1.4 Measured Input Filter

When the process variable input contains high frequency noise, such as in the case of flow rate signals or pressure signals, this filter can be used to eliminate the noise. The input filter is a first-order lag computation. The larger the time constant, the greater the noise reduction function. For improved control or phase compensation, the time constant can be changed during operation as an operating parameter.

Operating Parameter

- Measured input filter FL: Off, or time constant of 1 to 120 seconds

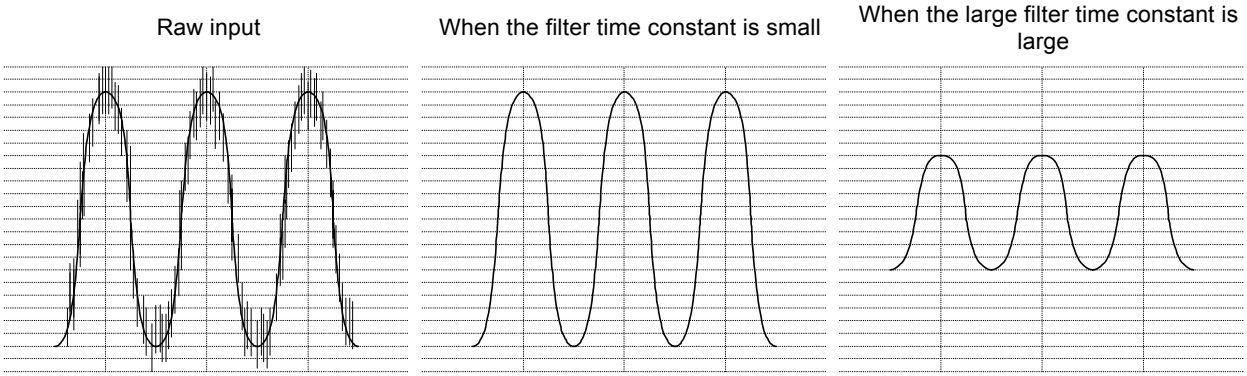

Fig. C2-2 Input Filter

3. Limit Control Functions

3.1 Limit control action

3.1.1 Limit control

When a process variable(PV) exceeds a setpoint(SP), “EXCEEDED” lamp lights, and “OUT” lamp turns ON (A). The limit output relay is di-energized then.
“EXCEEDED” lamp turns off when PV goes into normal condition, while “OUT” lamp stays on as it is (B). “OUT” lamp turns off when a confirming operation is done by an operator (C). The way to confirm is pushing the “RESET” key (or by an external contact, accorging to the setting of setup parameter DIS). The confirming operation is not accepted during PV exceeds SP (D). State of output relay is di-energizaed whenever “OUT” lamp is on. (NC terminal : CLOSE, NO terminal : OPEN)

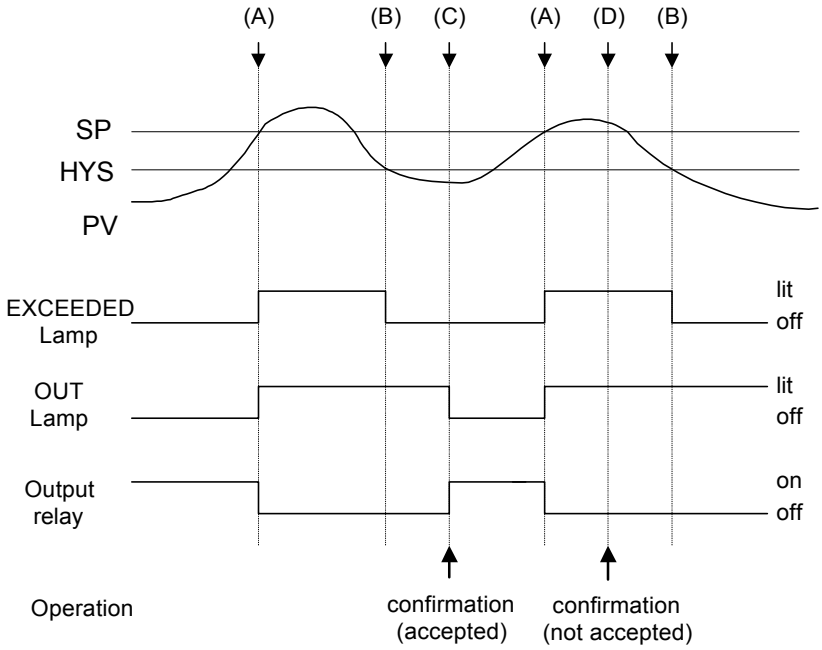

Fig. C3-1 Limit control action (High limit control)

3.1.2 Power on status

The state of output relay at power-on can be set by a setup parameter restart mode R.MD.

Setup Parameters

- Restard mode R.MD:
  0 : Limit output relay is di-energized at power on.
  1 : Limit output relay is energized at power on

■ **When R.MD is set to 0**

The limit output relay is always di-energized at power-on, even if PV doesn't exceed SP (A). (NC terminal: CLOSE, NO terminal : OPEN). "OUT" lamp is lit. After the confirmation, state of output relay is energized (NC ternminal : OPEN, NO terminal : CLOSE) and "OUT" lamp turns off, if the PV doesn't exceed SP (B).

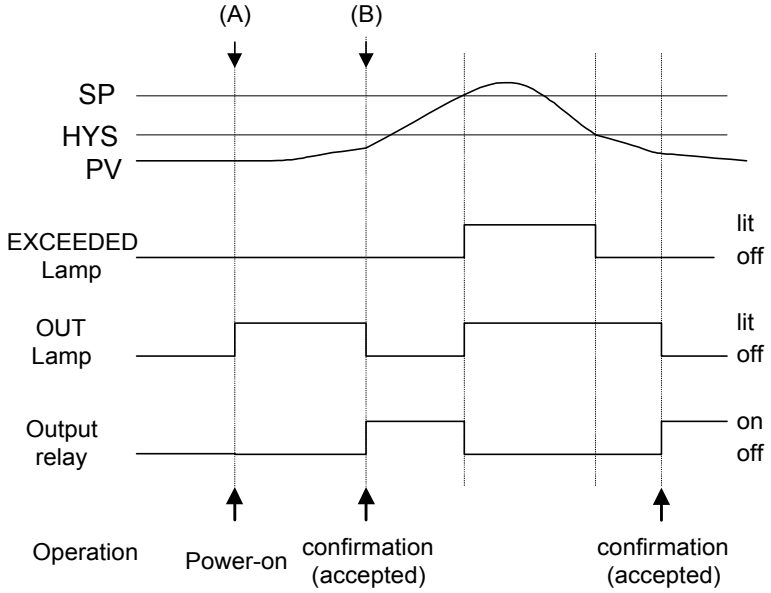

Fig. C3-2 Power-on status of high limit control when R.MD = 0

■ **When R.MD is set to 1**

The limit output relay is always energized at power-on (A) (NC terminal : OPEN, NO terminal : CLOSE) and "OUT" lamp is off, except when PV exceeds SP at power on.

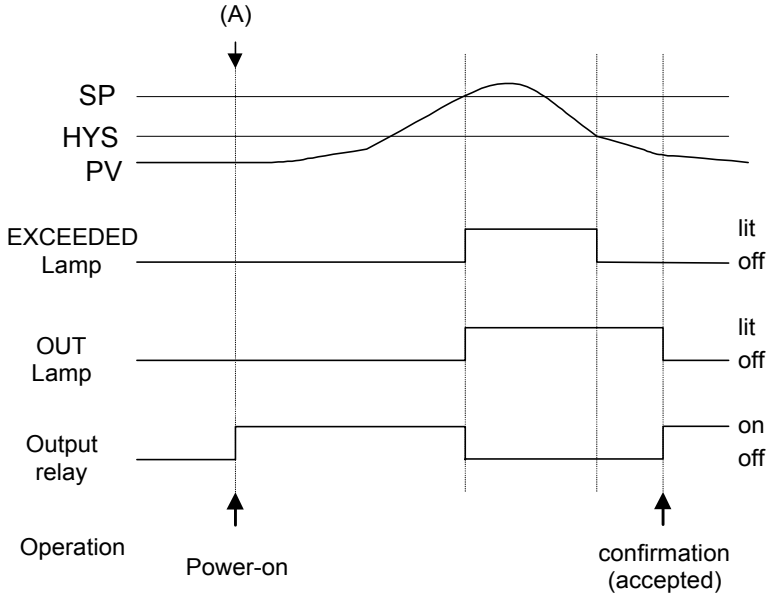

Fig. C3-3 Power-on status of high limit control when R.MD = 1

3.1.3 At Power-off

Output relay is off (di-energized) at power off.
Limit status before power-off is reset.

3.2 Parameters in the Confirmation Mode

3.2.1 Duration Time

The time while PV exceeds SP is counted and stored in the memory. It is displayed in the "TIME" display in the confirmation mode.
Display time range : 00.00 to 99.59
Unit of time is be either "hour.min" or "min. sec", and can be set by setup parameter TMU.

Setup Parameters

- Time Unit for Duration time TMU: 0 : hour.min , 1 : min.sec.

To RESET

- Push "RESET" key for about one second to reset the duration time in the confirmation mode where "TIME" is displayed. When the count are reset, "0.00" is displayed until PV exceeds SP again.
- The time count are reset when power is turned on.
- If PV exceeds SP during the old time count data is retained in the memory, the old data should be automatically reset , and the new time counting starts from "0.0".
- It is impossible to reset the time count while PV exceeds SP by any operation.
- Duration time cannot be reset by an external contact.

3.2.2 Maximum / Minimum value

The maximum value or minimum value of PV is stored in the memory and dsplayed in the "HI" or "LO" display in the confirmation mode.
When the control type is specified as high limit control, the maximum value is displayed in the "HI" display, and the control type is specified as low limit control, the minimum value is displayed in the "LO" display.
When the PV exceeds SP and then retern to the normal status, Maximum/Minimum value is retained as it is, but when PV exceeds SP again., it is automatically reset and start taking new value for its minimum /maximum value

To RESET

- Push the "RESET" key for about one second to reset the maximum/minimum value in the confirmation mode where "HI" or "LO" is displayed. The value is reset, and the value immediately after the confirmation should be recognized as a maximum or minimum value.

- When the power is turned-on, the memory should be reset and the first PV should be recognized as maximum.
- Maximum/minimum value cannto be reset by an external contact.
- It is impossible to reset the minimum/maximum value while PV exceeds SP by any operation.

4. Retransmission Output

The retransmission outputs the measured input value (PV) or Setpoint value(SP) as analog current signals (4 to 20 mA).

IMPORTANT

When using the retransmission output function, the sensor supply voltage function cannot be used.

Setup Parameters

- Retransmission output selection RET: 1 or 2
  1 = process variable: PV
  2 = target setpoint : SP
- Maximum value of retransmission output RTH: see below
- Minimum value of retransmission output RTL: see below

Normaly, set RTH (20 mA output) to the maximum of the measured range and set RTL(4 mA output) to the minimum of the measured range. If you set other values to RTH/RTL, make sure the retransmission range is within the measured range.

Example) When the measured range = 0 to 1000°C, RTL must be 0°C or more, and RTH must be 1000°C or less.

5. Alarm Function

5.1 Alarm Output

The UT350L has 2 alarm output points at maximum, each of which can be designated as a process variable alarm shown below. The alarm setpoints can be changed during operation.

- PV high limit/low alarm (Standby operation* available)
- PV deviation alarm (Standby operation* available)
- Fault diagnostic alarm
- FAIL output

*Standby operation function surpresses the PV related alarms during the rise interval from the following operaiton is done until a stable condition is reached.

・ Turning on the power

・ Changing alarm types

The figure below shows an example of a low limit alarm with the standby operation function.

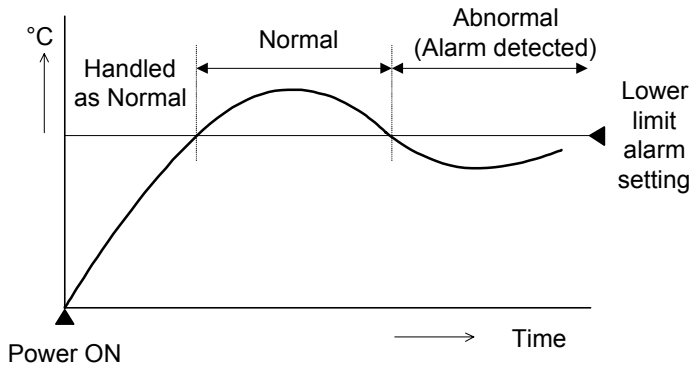

Fig. C5-1 Alarm With Standby Operation Function

① Alarm Types

Setup Parameters

- Alarm type selection ALn (n = 1 to 2): see Table C5-1

② Alarm Setpoints

Operating Parameters

Alarm setpoints An (n = 1 to 2): EU (-100.0 to 100.0%)

③ Alarm Hysteresis

The alarm hysteresis width can be set independently for each alarm (AL1 to AL2).

Setup Parameters

- Alarm hysteresis HYn (n = 1 to 2): EUS (0.0 to 100.0%)

The types of alarms are shown below. Codes 1 to 10 in the table are without standby operation; codes 11 to 20 are with standby operation.

Table C5-1 Alarm Types

Alarm	Action (The "Open" and "Closed" indicate the relay contact statuses and on and off indicate the lamp statuses.)	Alarm type code: Contact closed during alarm	Alarm type code: Contact open during alarm	Alarm	Action (The "Open" and "Closed" indicate the relay contact statuses and on and off indicate the lamp statuses.)	Alarm type code: Contact closed during alarm	Alarm type code: Contact open during alarm
No alarm		OFF		Deviation low limit passive during alarm	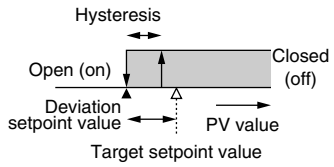		6 (16)
PV high limit	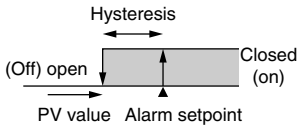	1 (11)					
PV value low limit	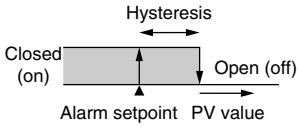	2 (12)		Deviation high and low limits	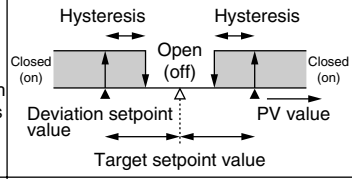	7 (17)	
Deviation high limit	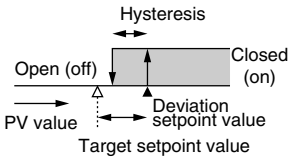	3 (13)		High and low limits within deviation	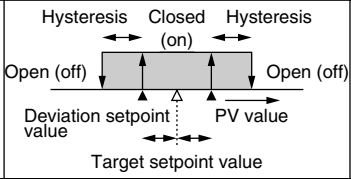	8 (18)	
Deviation low limit	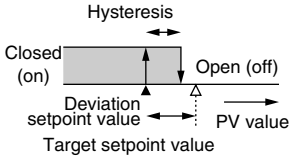	4 (14)		PV value high limit passive	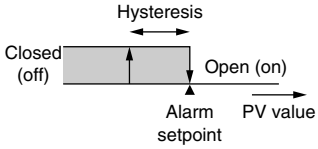		9 (19)
Deviation high limit passive during alarm	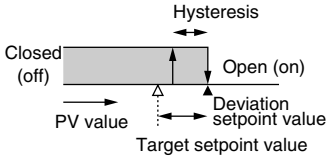		5 (15)	PV value low limit passive	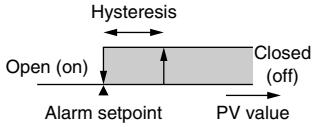		10 (20)

5.2 Fault Diagnostic Alarm

The fault diagnostic alarm turns on the alarm upon occurrence of input burnout, an A/D converter failure, or a reference contact compensation failure. The output is the preset output.

Setup Parameters

- Alarm type selection ALn (n = 1 to 2): 21

5.3 Fail Output

A FAIL output is reported for the occurrence of a program failure, ROM failure, RAM failure, or power failure. FAIL output is normally on but turns off in the FAIL condition. In this condition, retransmission output to 0%, alarm output to off, and indicator operation stops.

Setup Parameters

- Alarm type selection ALn (n = 1 to 2): 22

6. Behavior After Power Failure Recovery

Operation during a power failure and after recovering from a power failure differs depending on whether the break lasts for 20 ms or longer.

Table C6-1 Operation After Recovering from Power Failure

Power failure for less than 20ms	Normal operation continues, same as for no power failure.	
Power failure for 20ms or more	Display	Power off status, no display, outputs are OFF
	Output	
	Setting values	Set parameters are maintained.
Recovery after power failure	Control operation	Start the operation. Limit status before power-off is reset.
	Alarm operation	Alarms restart operation(including standby operation).

Part D: Maintenance

CONTENTS

1. Problems and Corrective Measures D1-1
1.1 What To Do When Errors Occur D1-1
1.1.1 Power-ON Errors D1-1
1.1.2 Operating Errors D1-2
1.2 Troubleshooting Flow Chart D1-3
2. Cleaning and Maintenance D2-1
2.1 Cleaning D2-1
2.2 Replacing the Mounting Bracket D2-1
2.3 Limited Life Components and Maintenance D2-1

1. Problems and Corrective Measures

1.1 What To Do When Errors Occur

This section explains what happens to the controller and what corrective measures should be taken when “power-ON errors” or “operating errors” are generated.
When an error is generated, follow the corrective measures described in the table below.
The error code is displayed on the PV display unit. Also, there exist errors that cause the decimal points of the PV and SP displays to flash.

1.1.1 Power-ON Errors

When the power is turned ON, the errors that can be generated during self-diagnostics are shown below:

Table D1-1 Power-ON error codes

Error display	Error description	Controller status	Process variable value	Control output	Alarm	Transmission output	Communications	What to do
E000	RAM error	Operations are stopped	None	OFF	OFF	0%	Stopped	Breakdown! Request repair work.
E001	ROM error							
E002	System data error	Operations are stopped	None	OFF	OFF	0%	Normal operations	Breakdown! Request repair work.
PV decimal point flashes	Calibration error	Operates normally after initialization of calibration value	Normal operations (without accuracy)	Normal operations (without accuracy)	Normal operations (without accuracy)	Normal operations (without accuracy)	Normal operations	Breakdown! Request repair work.
E400	Parameter error	Operates normally after auto-initialization of error parameter	0%	OFF	OFF	0%	Normal operations	Since the setting parameters have been initialized, confirm and reset them.

1.1.2 Operating Errors

During operations, the following errors can be generated:

Table D1-2 Error codes during operation

Error display	Error description	Controller status	Process variable value	Control output	Alarm	Transmission output	Communications	What to do
Alternately displays RJC and PV value	RJC error	Cancels zero tangent compensation and operates	Measurement made with RJC=0	Normal operation	Normal operation	Normal operation	Normal operation	Breakdown! Request repair work.
PV value flashes	EEPROM error	Normal operations using only RAM until power is cut	Normal operation	Normal operation	Normal operation	Normal operation	Normal operation	Breakdown! Request repair work.
E300	ADC error	Normal operations	105%	Normal operations	Normal operation	Normal operation	Normal operation	Breakdown! Request repair work.
B.OUT	PV burnout	Depends on designation of BSL.	BSL value	OFF	Normal operation	Normal operation	Normal operation	Check wiring and sensor
OVR/-OVR	PV over (outside -5% to 105%)	Operates with PV = 105% or PV = -5%	Limit value	Normal operation	Normal operation	Normal operation	Normal operation	Check the process
SP decimal point flashes	Communication line error	No response	Normal operation	Normal operation	Normal operation	Normal operation	Normal operation	Confirm the communication parameters and reset them. Normal reception returns.
No display	Communications time-out	Reception waiting status	Normal operation	Normal operation	Normal operation	Normal operation	Normal operation	Confirm that the delimiter has been sent
No display	Communication syntax error	Sends back error message	Normal operation	Normal operation	Normal operation	Normal operation	Normal operation	Confirm the contents of the transmission data.
All displays are extinguished	Collapse (due to power failure or noise)	CPU is reset	None	OFF	OFF	0% or less	Stopped	Turn the power OFF and ON to restart. If it doesn't restart it has broken down. Request repair work.
All displays are extinguished	Power is OFF	Communications dead status	None	0%	OFF	0%	Stopped	Check if there is a problem with the power supply.

1.2 Troubleshooting Flow Chart

In the event the operating screen does not get displayed even though power is supplied to the controller, remedy the situation by following the flow chart below.

If you think the breakdown is complicated, contact the sales outlet where you made your purchase. If the controller becomes defective within a year of purchase, the company will repair or replace it (if the manufacturer is at fault).

If the product becomes defective after one year, the company will repair or replace it for an additional fee.

When the controller is repaired or replaced, the individual parameters are initialized. Therefore, before using it, you need to set the necessary parameters. To check the parameter records, refer to the parameter list at the end of the manual to maintain and manage each instrument.

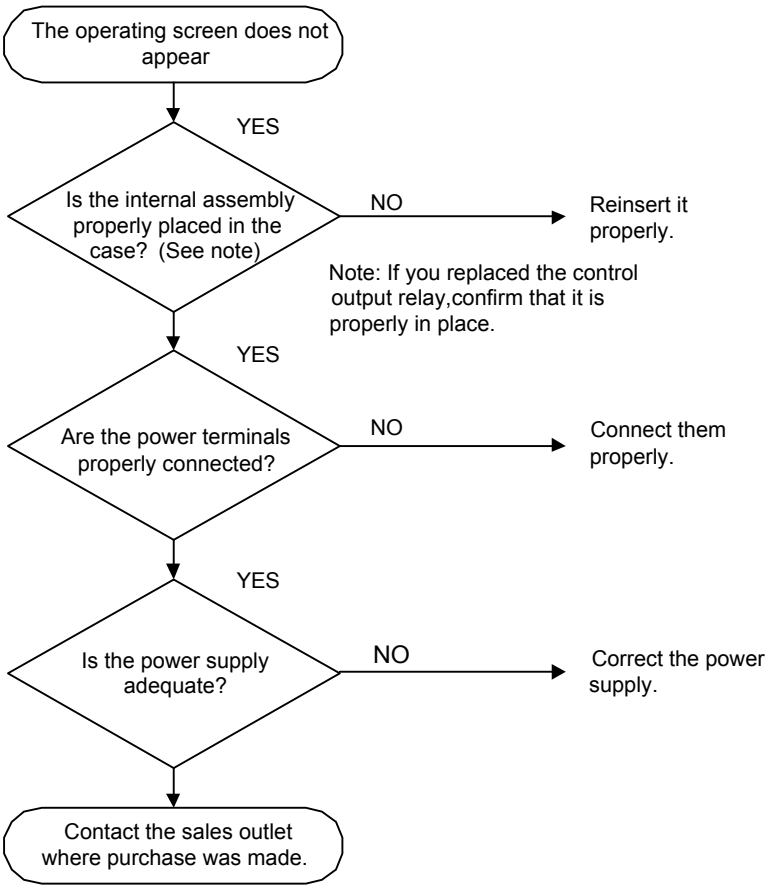

IMPORTANT

When replacing the product with a spare machine you have already purchased, even if the model name is the same, it may operate differently because of different values in the setting parameters. Confirm compatibility before using the replacement.

2. Cleaning and Maintenance

This chapter describes how to clean and maintain the controller.

2.1 Cleaning

Use a dry cloth and wipe gently to clean the product's front panel, keys, and other areas.

NOTE

Do not use solvents such as alcohol or benzene.

2.2 Replacing the Mounting Bracket

If the mounting bracket is damaged or lost, order a replacement using the following serial number and sales unit:

Part No.	Sales Unit
T9115NL	One pair (upper and lower bracket)

2.3 Limited Life Components and Maintenance

The parts used in this product that have an especially limited life are shown below:

Part	Service Life
Aluminum electrolytic capacitor	About 10 years (Estimated)
Built-in backup battery	About 10 years (Estimated)
Alarm output relay	10,000 or more repetitions (ON/OFF, restive load)

You should use the replacement service to replace any parts (at your cost) that are hindering this product as a result of deterioration.

Part E: Communication

CONTENTS

1. Communication Functions E1-1
2. Functions and Applications of D Registers E2-1
2.1 Outline of D Registers E2-1
2.2 Method of Reading the D Register Table E2-2
2.3 Configuration of D Registers E2-3
2.4 D Register Map Tables E2-4
2.5 Information on Read Only D Registers E2-8
2.6 User Area E2-9
3. Functions and Applications of I Relays E3-1
3.1 Outline of I Relays E3-1
3.2 Method of Reading the I Relay Table E3-1
3.3 Configuration of I Relays E3-2
3.4 User Area E3-5
3.5 Access via Communications E3-5

1. Communication Functions

Communication functions are optional. They are available only with “UT350L-01”.

Regarding communication functions of UT350L, see “the GREEN SERIES Communication Functions Instruction Manual (IM 5D1D01-10E)”, chapter 1, 2, 3, and, 6 as necessary. In this case, please change read UT350 to UT350L.

About Functions and applications of D registers I relays (chapter 7 or 8 IM 5D1D01-10E respectively) of UT350L, see the chapter 2 or 3 of this parts.

2. Functions and Applications of D Registers

2.1 Outline of D Registers

In this chapter, functions and applications of D registers will be described using the D registers of the UT350L limit controller.

If you have obtained a grasp of the contents of the D registers, you can do the following.

- Write/read data to and from MITSUBISHI's PLC.
- Perform centralized supervision by configuring a computer.

In addition, you can do the following by configuring the functions of the instruments.

- Register the SELECT Displays.

“D register” is the name of CPU register on a word basis in PLCs manufactured by Yokogawa (FA-M3, FA500, etc.). A PLC user can freely configure a system using a ladder program by using D registers, and others.

The GREEN Series instruments use computer link communication protocol and ladder protocol as communication protocol. Also, the internal data are assigned to D registers. Consequently, the instruments can be easily connected to equipment (PC, PLC) that supports computer link communication or ladder communication, enabling data to be shared.

The instruments assign all process data, set parameters and definition information to D registers.

2.2 Method of Reading the D Register Table

This section describes how to read the D register map tables shown in Section 2.4.

The numerical values running vertically down the left side of the table indicate the bottom two digits of the register numbers. The 4-digit numbers beneath the register group names at the top of the table are the register numbers spaced at intervals of 100 registers from each other.

For example, if you wish to observe the contents of D1210, first search for 1200 in the 4-digit numerical value column at the top of the table. Next, move down this column and read off the line where the number in the numerical value column at the left side is 10. The contents of D register “D1210” are indicated in this column.

The symbols in the register map indicate the operating parameters, setup parameters, program parameters and other flags. Regarding the contents of the operating parameters, setup parameters and program parameters, refer to the instruction manual for each instrumet.

	PROCESS	.....	UTMD
No	0	.....	1200
1	ADERROR	.....	IN1
		.....	
		.....	
10	MAX/MIN	.....	RJC
		.....	
100		.....	

2.3 Configuration of D Registers

- **Classification of D register mapping table**

The contents of the D register mapping table are classified as follows.

UT350L D register map structure

Table E2-1 UT350L D Register Configuration

Register No.	Classification		Description
1 to 49	Process data (Note 1)	Data displayed on the operating displays	PV, SP, OUT
50 to 100	User area	———————	User area
101 to 200	Unused area	———————	———————————
201 to 400	Operating parameters	Operating parameters	A1, A2, BS, FL, etc.
401 to 900	Unused area	———————	———————
901 to 1300	Setup parameters (Note 1)	I/O and alarm function parameters	AL1,AL2, RET, IN, etc.

Note 1: Data pertaining to process data, operating parameters and setup parameters are stored in the format indicated in the parameter table (EU, EUS, % and ABS data excluding the decimal point). See instruction manual of each instrument for the parameter tables.

2.4 D Register Map Tables

The D register map for model UT350L is shown in the following

Table E2-2 D Register Map (1/4) UT350L

	PROCESS	PROGRAM	MODE/PAR	OPERATION(1)		OPERATION(2)		USR/PY
No	+0	+100	+200	+300	+400	+500	+600	+700
1	ADERROR			SP				
2	ERROR							
3	PV							
4	CSP							
5								
6								
7								
8	MOD							
9	TIME							
10	MAX/MIN							
11	ALM							
12								
13								
14								
15								
16								
17								
18								
19								
20								
21								
22								
23								
24								
25								
26								
27								
28								
29								
30								
31			A1					
32			A2					
33								
34								
35	PARAERR							
36								
37								
38								
39								
40								
41								
42								
43			BS					
44			FL					
45								
46								
47								
48								
49								
50								

Read Only User-definable area (50 to 100)

Table E2-3 D Register Map (2/4) UT350L

	PROCESS	PROGRAM	MODE/PAR	OPERATION(1)		OPERATION(2)		USR/PY
No	+0	+100	+200	+300	+400	+500	+600	+700
51								
52								
53								
54								
55								
56			H					
57								
58								
59								
60	User							
61	area							
62	(50 to 100)							
63								
64								
65								
66								
67								
68								
69								
70								
71								
72								
73								
74								
75								
76								
77								
78								
79								
80								
81								
82								
83								
84								
85								
86								
87								
88								
89								
90								
91								
92								
93								
94								
95								
96								
97								
98								
99								
100								

Read Only User-definable area (50 to 100)

Table E2-4 D Register Map (3/4) UT350L

	MSG	L1/L2	CMLP	CONF	UTMD
No	+800	+900	+1000	+1100	+1200
1					IN
2					UNI
3					
4		TMU			RH
5					RL
6					SDP
7					SH
8					SL
9					BSL
10					RJC
11					
12					
13			RET		
14			RTH		
15		AL1	RTL		
16		AL2			
17					
18					
19		HY1			
20		HY2			
21					
22					
23					
24					
25					
26					
27					
28					
29					
30		R.MD			
31					
32		DIS			
33		HI.LO			
34		OP.SL			
35					
36			LOCK		
37					
38					
39					
40					
41					
42					
43					
44					
45					
46					
47					PSL
48					BPS
49					PRI
50					STP

Table E2-5 D Register Map (4/4) UT350L

	MSG	L1/L2	CMLP	CONF	UTMD
No	+800	+900	+1000	+1100	+1200
51					DLN
52					ADR
53					RP.T
54					
55					
56					
57					
58					
59					
60					
61					
62					
63					
64					
65					
66					
67					
68					
69					
70					
71					
72					
73					
74					
75					
76					
77					
78					
79					
80					
81					
82					
83					
84					
85					
86					
87					
88					
89					
90					
91					
92					
93					
94					
95					
96					
97					
98					
99					
100					

2.5 Information on Read Only D Registers

In some of registers D0001 to D0049, more than one content is indicated by the respective bits in the register. If an event indicated by a particular bit has occurred, that bit is “1”. If it has not occurred, the bit is “0”. Blank fields in each table are unused.

The following bit information symbols are the same notation as those of I relay symbols described in chapter 3.

- **D0001: ADERROR (Input error)**

Table E2-6 D0001 Bit Configuration

Bit	Symbol	Description
0	ADERROR	Input A/D converter error
1-15		

- **D0002: ERROR (PV error)**

Table E2-7 D0002 Bit Configuration

Bit	Symbol	Description
0	PV ADC	PV A/D converter error
1	PV BO	PV burnout error
2	RJC ERR	PV RJC error
3		
4	PV+over	PV over-scale
5	PV-over	PV under-scale
6-15		

- **D0003: PV (Measured input variable)**
- **D0004: CSP (Currently used target setpoint)**

- **D0008: MODE (Mode)**

Table E2-8 D0008 Bit Configuration

Bit	Symbol	Description
0		
1	EXD	1: EXCEED
2	OUT	outRelay; 1:on 0:off
3-15		

- **D0009: TIME (Duration time 0~5999)**
- **D0010: MAX/MIN (Maximum or Minimum value)**
- **D0011: ALM (alarm)**

Table E2-9 D0011 Bit Configuration

Bit	Symbol	Description
0	ALM1	Alarm 1; 1:on 0:off (Except for UP350)
1	ALM2	Alarm 2; 1:on 0:off (Except for UP350)
2-15		

- **D0035: PARAERR (calibration value, parameter abnormality)**

Table E2-10 D0035 Bit Configuration

Bit	Symbol	Description
0	CALB.E	Calibration value error
1-5		
6	SETUP	Setup parameter abnormality
7		
8	PARA.E	Operating parameter abnormality
9-11		
12	EEP.E	EEPROM abnormality
13		
14	SYSTEM.E	System data error
15		

2.6 User Area

An area of the D register numbers from 50 to 100 can be read or written via communications. This area can be used by the user freely independent of the control with the controller.

3. Functions and Applications of I Relays

3.1 Outline of I Relays

In this chapter, functions and applications of I relays will be described using the I relays of the UT350L limit controller.

If you have obtained a grasp of the contents of the I relays, you can do the following.

- Perform centralized supervision by configuring a computer.

With the I relays, you can read the operation mode and the key operation status of the instruments as flags.

However, all of the contents of the I relays can be read by the D registers as well. Conversely, some of the items that can be read/written by the D registers can only be read by the I relays.

3.2 Method of Reading the I Relay Table

This section describes how to read the I relay map table shown in section 3.3 of this chapter.

The numerical values running vertically down the left side of the table indicate the relay numbers.

3.3 Configuration of I Relays

The contents of the I relay mapping tables are classified as follows:

On/off data items always reside in statuses of 1 to 192 and normally this area is read out.

Blank fields in fields from I relay numbers 1 to 720 in the I relay map tables are not currently used. Do not read or write data from/to these fields.

Bit functions for I relays of 1 to 576 are the same as the bit information in the registers of the dedicated readout information of the D registers. Understand the I relay functions by collating the bit symbols described in section 2.5 with the I relay bit symbols.

Table E3-1 Configuration of I Relays

Relay number	Classification	Description
1 to 16	Status	Input error (the same contents as D0001)
17 to 32		PV error (the same contents as D0002)
33 to 48		Use forbidden
49 to 64		Calibration value or parameter error (the same contents as D0035)
65 to 80		Mode (the same contents as D0008)
81 to 96		Use forbidden
97 to 112		Alarm status (the same contents as D0011)
113 to 160		Use forbidden
161 to 176		Use forbidden
177 to 192		Use forbidden
193 to 208	On status	Use forbidden
209 to 224		Use forbidden
225 to 240		Use forbidden
241 to 256		Use forbidden
257 to 272		Use forbidden
273 to 288		Use forbidden
289 to 304		Use forbidden
305 to 352		Use forbidden
353 to 368		Use forbidden
369 to 384		Use forbidden
385 to 400	Off status	Use forbidden
401 to 416		Use forbidden
417 to 432		Use forbidden
433 to 448		Use forbidden
449 to 464		Use forbidden
465 to 480		Use forbidden
481 to 496		Use forbidden
497 to 544		Use forbidden
545 to 560		Use forbidden
561 to 576		Use forbidden
577 to 592	Status	Use forbidden
593 to 608		Use forbidden
609 to 624		Use forbidden
625 to 656		Use forbidden
657 to 672		Use forbidden
673 to 688		Use forbidden
689 to 704		Use forbidden
705 to 720	Use forbidden	Use forbidden
721 to 2048	User area	An area which the user can freely read out or write in

- I Relay Map (1/1) UT350L

	STATUS		STATUS		STATUS		STATUS		STATUS
No.	(+0)	No.	(+64)	No.	(+128)	No.	(+704)	No.	(+768)
1	ADERROR	65		129		705		769	
2		66	EXD	130		706		770	
3		67	OUT	131		707		771	
4		68		132		708		772	
5		69		133		709		773	
6		70		134		710		774	
7		71		135		711		775	
8		72		136		712		776	
9		73		137		713		777	
10		74		138		714		778	
11		75		139		715		779	
12		76		140		716		780	
13		77		141		717		781	
14		78		142		718		782	
15		79		143		719		783	
16		80		144		720		784	
17		81		145		721		785	
18	PV BO	82		146		722		786	
19	RJC ERR	83		147		723		787	
20		84		148		724		788	
21	PV+over	85		149		725		789	
22	PV-over	86		150		726		790	
23		87		151		727		791	
24		88		152		728		792	
25		89		153		729		793	
26		90		154		730		794	
27		91		155		731	User-	795	
28		92		156		732	Definable	796	
29		93		157		733	Area	797	
30		94		158		734		798	
31		95		159		735		799	
32		96		160		736		800	
33		97	ALM1	161		737		801	
34		98	ALM2	162		738		802	
35		99		163		739		803	
36		100		164		740		804	
37		101		165		741		805	
38		102		166		742		806	
39		103		167		743		807	
40		104		168		744		808	
41		105		169		745		809	
42		106		170		746		810	
43		107		171		747		811	
44		108		172		748		812	
45		109		173		749		813	
46		110		174		750		814	
47		111		175		751		815	
48		112		176		752		816	
49	CALB.E	113		177		753		817	
50		114		178		754		818	
51		115		179		755		819	
52		116		180		756		820	
53		117		181		757		821	
54		118		182		758		822	
55	SETUP	119		183		759		823	
56		120		184		760		824	
57	PARA.E	121		185		761		825	
58		122		186		762		826	
59		123		187		763		827	
60		124		188		764		828	
61	EEP.E	125		189		765		829	
62		126		190		766		830	
63	SYSTEM.E	127		191		767		831	
64		128		192		768		832	

User-definable area (721 to 784)

3.4 User Area

The area from I relay number 721 to number 2048 can be written/read via communications. This area can be used freely by the user regardless of control by the controller.

3.5 Access via Communications

To write to or read from the I relay via PC link communication, specify I relays with device names. For example, specify the device name “I0001” when designating ADERROR(I0001).

I relays cannot be accessed through ladder communications.

Appendix

CONTENTS

Appendix 1 Operating Parameter Table.....App.1-1
Appendix 2 Setup Parameter Table App.2-1
Appendix 3 Enginnering Units (EU, EUS) App.3-1

Appendix 1 Operating Parameter Table

The following parameters are operating parameters. They can be displayed in the setting screen menu for operating parameters called “OP.PA.”

Type	Symbol	Description	Setting range	Default value	User-set value
Operating parameters	SP	Setpoint for limit control	EU(0.0 to 100.0%)	High limit type : EU: (100.0%) Low limit type : EU: (0.0%) (See note)	
	A1	Setpoint for alarm 1	Alarm for process variable value: EU(-100.0 to 100.0%) Alarm for deviation: EUS(-100.0 to 100.0%)	Setpoint value for alarm 1 : EU: (100.0%) Others: EU (0.0%)	
	A2	Setpoint for alarm 2			
	FL	Measured input filter	OFF, 1 to 120 sec.	OFF	
	BS	Measured input bias	EUS(-100.0 ~ 100.0%)	EUS(0.0%)	
	H	Hysteresis of limit output	EUS(0.0 to 100.0%)	EUS(0.5%)	

Note : Limit control type can be set by the setup parameter “HI.LO”.

Appendix 2 Setup Parameter Table

The setup parameters are displayed in the “FUNC” and the “I/O” setting screen menu for setup parameters after the SET/ENT key is pressed in the “STUP” setting screen menu for operating parameters. The parameters in the table below are displayed in the “FUNC” setting screen menu for setup parameters.

Type	Symbol	Description	Setting range	Default value	User-set value
Setup parameters	AL1	Alarm type1	OFF, 1 ~ 22	1	
	AL2	Alarm type 2		2	
	HY1	Alarm 1 hysteresis	EUS(0.0 ~ 100.0%)	EUS(0.5%)	
	HY2	Alarm 2 hysteresis			
	HI.LO	Limit control type selection (Note 1)	HI(High limit), LO(Low limit)	HI(High limit)	
	R.MD	Restart mode	0: Limit output is ON at power on in any cases. 1: Limit output is OFF at power ON when PV doesn’t exceed SP.	0	
	OP.SL	Operating display selection	0: PV/SP display first 1: SP only display first	0	
	TMU	Time unit for duration time	0: Hour. minute, 1: Minute. second	0	
	P.SL	Protocol selection (Note 2)	0: Personal computer link communication; 1: Personal computer link communication (sum checked); 2: Ladder communication	0	
	BPS	Communications speed (Note 2)	0:600 1:1200 2:2400 3:4800 4:9600	4	
	PRI	Parity (Note 2)	0: None; 1: Even 2: Odd	1	
	STP	Stop bit (Note 2)	1, 2	1	
	DLN	Data length (Note 2)	7 or 8 (Set to 8 for other than PC link communication)	8	
	ADR	Address (Note 2)	1 to 99; However the maximum number of units that can be connected is 31	1	
	RP.T	Minimum response time (Note 2)	0 to 10×10ms	0	

Note 1: When the limit control type is changed, setpoint (SP) becomes the default value.

Note 2 : The parameters are shown only when necessary optional specification is specified.

The parameters in the table below are displayed in the “I/O” setting screen sub menu for setup parameters.

Type	Symbol	Description	Setting range	Default value	User-set value
Setup parameters	IN	Input type	Refer to part C in section 2.1.1	1 (Type k)	
	UNIT	Input unit designation	°C, °F	°F	
	RH	Maximum of measured input range	Within the instrument input range corresponding to the input range with IN parameter.	Highest value for gauge range	
	RL	Minimum of measured input range		Lowest value for gauge range	
	SDP	Position of decimal point for input	Not displayed	Location of decimal point for gauge range; DC voltage: 1	
	SH	Largest value for input scale (displays when a voltage is input)	DC voltage: -1999 to 9999; However SL < = SH	When DC voltage is selected: 100.0	
	SL	Smallest value for input scale (displays when a voltage is input)		When DC voltage is selected: 0.0	
	RJC	Input RJC ON/OFF	OFF, ON	ON	
	BSL	Selection of input burnout action	0 (OFF); 1 (upscale); 2 (down scale)	1	
	RET	Retransmission output type	1: PV, 2: SP	1	
	RTH	Maximum value of retransmission output range	EU (0.0 to 100.0%)However RTL<RTH	RH	
	RTL	Minimum value of retransmission output range		RL	
	DIS	The way of confirmation	KEY : By key operation; DI : By contact output, only the limit output can be confirmed	KEY	
	LOCK	Key lock	OFF; ON: Parameter changes prohibited; except for LOCK parameter.	OFF	
	PWD	Password	0: OFF 1 to 9999	0	

Appendix 3 Engineering Units (EU, EUS)

The units of internal data used by the controller are as described below.

EU (): Value in the engineering unit corresponding to the instrument range

EUS () : Value of the range in the engineering unit corresponding to the span

Example: When the instrument range is between -200 and 1200 °C

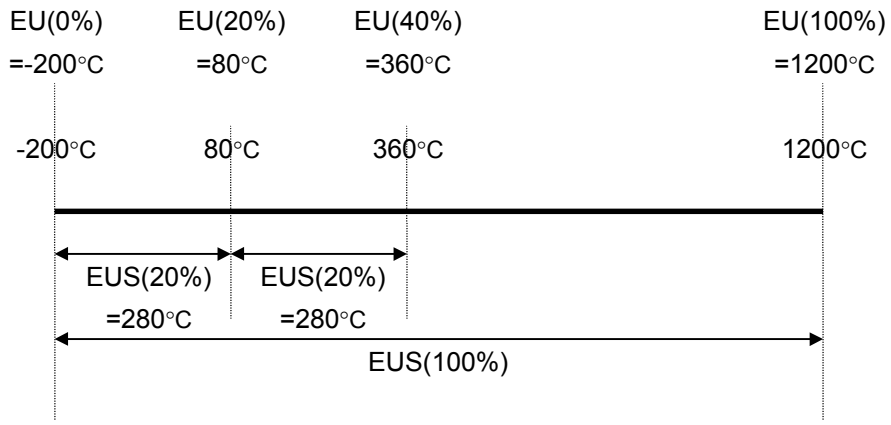

◆ Revision Record

Title: UT350L Limit Controller Instruction Manual

Manual No.: IM 5D1D21-01E

Edition	Date	Revised Item
1st	Jul. ’97	Newly published

Written by PCI Marketing Department.
Yokogawa M&C Corporation

Published by Yokogawa M&C Corporation
Kojimachi Tokyu Bldg. 3F
Kojimachi 6-6 Chiyoda-ku, Tokyo, 102 Japan