User's Manual

Model VJA5 Distributor (with Square Root Extractor)

(Isolated Single-output and Isolated Dual-output Types)

JUXTA

Yokogawa Electric Corporation
2-9-32, Naka-cho Musashino-shi, Tokyo 180-8750 Japan
Phone: +81-422-52-7179 Facsimile: +81-422-52-6793

You can download the latest manuals from the following website:

http://www.yokogawa.com/ns/juxta/im/

Thank you for purchasing the JUXTA Signal Conditioner.
Please read through this manual before use for correct handling.

YOKOGAWA
Yokogawa Electric Corporation

IM 77J01A05-01E
6th Edition Mar. 2021 (YK)

CAUTIONARY NOTES FOR SAFE USE OF THE PRODUCT

This User's Manual should be carefully read before installing and operating the product. Please keep this User's Manual for future reference. For more information of the safety precautions, please refer to the "Precautions on the Use of the JUXTA Series (IM 77J01A00-91Z1)". The related manuals and general specifications are shown in the table below.

Doc. Name	Doc. Number
Precautions on the Use of the JUXTA Series (User's Manual)	IM 77J01A00-91Z1
Model VJA5 Distributor (User's Manual)	IM 77J01A05-01E (This manual)
Model VJA5 Distributor (General Specifications)	GS 77J01A05-01E

User's manuals in the above table are essential parts of the product; keep it in a safe place for future reference.
This manual is intended for the following personnel;

- Engineers responsible for installation, wiring, and maintenance of the equipment.
- Personnel responsible for normal daily operation of the equipment.

The following symbol is used on the product and in this manual to ensure safe usage.

WARNING

Calls attention to actions or conditions that could cause serious or fatal injury to the user, and indicates precautions that should be taken to prevent such occurrences.

CAUTION

Calls attention to actions or conditions that could cause injury to the user or damage to the instrument or property and indicates precautions that should be taken to prevent such occurrences.

QR Code

The product has a QR Code pasted for efficient plant maintenance work and asset information management.
It enables confirming the specifications of purchased products and user's manuals.
For more details, please refer to the following URL.

https://www.yokogawa.com/qr-code

* QR Code is a registered trademark of DENSO WAVE INCORPORATED.

CHECKING PRODUCT SPECIFICATIONS AND PACKAGE

(1) Checking the Model and Product Specifications

Check that the model and specifications indicated on the nameplate attached to the main unit are as ordered.

(2) Packaged Items

Check that the package contains the following items:

- VJA5: 1 unit

Standard Accessories:

- Tag number label: 1 sheet
- User's manual (IM 77J01A05-01E, this manual): 1 copy
- User's manual (IM 77J01A00-91Z1): 1 copy

GENERAL

This plug-in type distributor is used in combination with a two-wire type transmitter to calculate the square root of 4 to 20 mA DC input signals from the transmitter and then convert them into isolated DC current or DC voltage signals.

MODEL AND SUFFIX CODES

Model	Suffix codes								Description
VJA5	-0	x	x	-A	x	x	0	/x	Distributor (with Square Root Extractor)
Fixed code	-0								Always -0
Output		1							1 output
		2							2 outputs
Power supply			6						100-240 V AC/DC*1
			7						15-30 V DC*2
Input signal				-A					4 to 20 mA DC Transmitter power supply: 25.25±0.25 V DC
Output-1 signal					A				4 to 20 mA DC
					B				2 to 10 mA DC
					C				1 to 5 mA DC
					D				0 to 20 mA DC
					E				0 to 16 mA DC
					F				0 to 10 mA DC
					G				0 to 1 mA DC
					1				0 to 10 mV DC
					2				0 to 100 mV DC
					3				0 to 1 V DC
					4				0 to 10 V DC
					5				0 to 5 V DC
					6				1 to 5 V DC
					7				−10 to +10 V DC
					Z				Custom order *3
Output-2 signal						A			4 to 20 mA DC
						6			1 to 5 V DC
						N			No output-2
						Z			Custom order *3
Fixed code							0		Always 0
Option								/SN	No socket (with socket if not specified)
								/C0	Coating *4
								/FB	Fuse bypass *4

*1: Operating range: 85 to 264V AC/DC
*2: Operating range: 12 to 36V DC
*3: DC voltage signal or DC current signal
*4: When option code /C0 or /FB is specified, the conformity to the safety and EMC standards is excluded. CE marking is not applicable.

Note: An exclusive User's Manual might be attached to the products whose suffix codes or option codes contain the code "Z" (made to customers' specifications). Please read it along with this manual.

1. MOUNTING METHOD

CAUTION

- **Plug/disconnect the main unit into/from the socket vertically to the socket face. Otherwise the terminals may bend and it may cause bad contact.**
- **The converter shall not tilt 5 degrees or more in either direction when installed.**
- **When the converter is not connected to the socket, it is necessary to protect the socket against ingress of dust to the connector part.**
- **Keep this product in a conductive bag when plugged out, during transport or storage.**

1.1 Wall Mounting

Loosen the main unit-fixing screw of the product and pull out the main unit from the socket. Fix the socket on the wall with screws. Next, insert the main unit into the socket and fasten the main unit with the main unit-fixing screw.

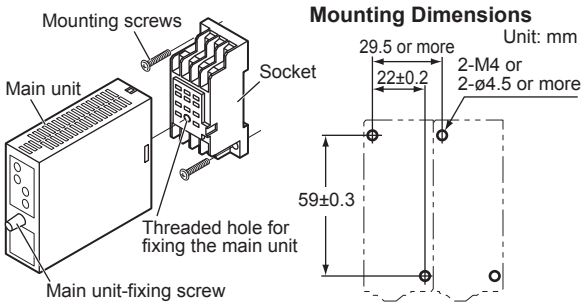

1.2 DIN Rail Mounting

Insert a DIN rail into the upper part of the DIN rail groove on the rear of the socket, and then slide the slide lock at the lower part of the socket upwards until the socket is fixed into position as shown below.

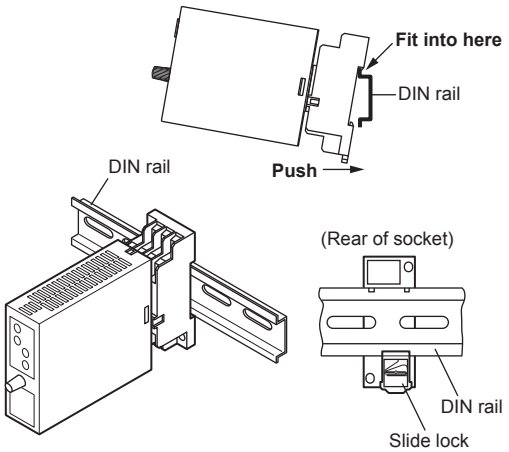

1.3 Mounting Using a Multi-mounting Base

When using a multi-mounting base, see the User's Manual for VJCE-01A (VJ Mounting Base for communication) (IM 77J01C51-11E).

1.4 Using a Duct

When using a wiring duct, install the duct at leaset 30 mm away from the top and bottom faces of the main unit.

2. INSTALLATION AND ENVIRONMENTAL CONDITIONS

- Avoid the following environments for installation locations: Areas with vibrations, corrosive gases, dust, water, oil, solvents, direct sunlight, radiation, a strong electric field, and/or a strong magnetic field, direct radiant heat, wind, temperature fluctuation.
- If there is any risk of a surge being induced into the power line and/or signal lines due to lightning or other factors, a dedicated lightning arrester should be used as protection for both the product and a field-installed device.
- Use indoors at an altitude of 2000 m or less.
- Operating temperature/humidity range: −10 to 55°C (−10 to 45°C for side-by-side mounting*)/5 to 90%RH (no condensation)
  - * If the previous model (style S3.xx earlier) is installed together, the ambient temperature is 0 to 40°C.
- Continuous vibration: (at 5 to 9 Hz) Half amplitude of 3 mm or less (at 9 to 150 Hz) 9.8m/s^2 or less, 1 oct/min for 90 minutes each in the three axis directions
- Impact: 98 m/s^2 or less, 11 ms, 3 axes, 6 directions, 3 times each

3. EXTERNAL WIRING

WARNING

- **To avoid the risk of an electric shock, turn off the power supply and use a tester or similar device to ensure that no power is supplied to a cable to be connected, before carrying out wiring work.**
- **Do not operate the product in the presence of flammable or explosive gases or vapors. To do so is highly dangerous.**
- **Use of the product ignoring the specifications may cause overheating or damage. Before turning on the power, ensure the following:**
  - Power supply voltage and input signal value applied to the product should meet the required specifications.
  - The external wiring to the terminals and wiring to ground are as specifications.

Wiring should be connected to the terminals on the socket of the product. The terminals for external connections are of M3 screws. Use crimp-on terminal lugs for connections to the terminals.

- Recommended cables: A nominal cross-sectional area of 0.5 mm^2 or thicker for signal cables, and that of 1.25 mm^2 or thicker for power cables.

Wiring Diagram

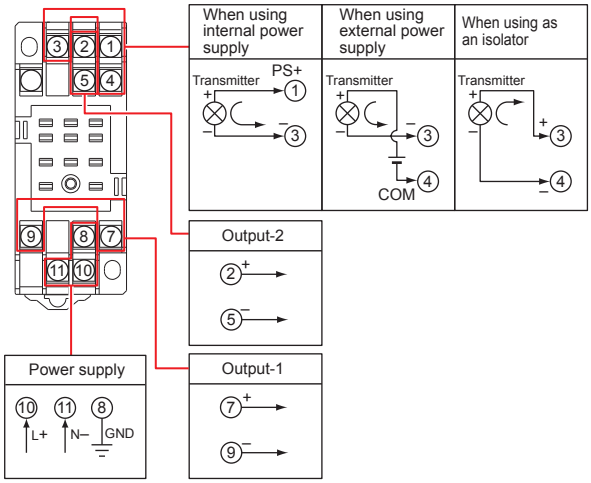

CAUTION

- **Do not use output-2 for the isolated single-output type.**
- **The power line and input/output signal lines should be installed away from noise-generating sources. Other wise accuracy cannot be guaranteed.**
- **Make sure to earth ground the ground terminal through minimum resistance. The length and thickness of the grounding cable should be as short and thick as possible. Directly connect the lead from the ground terminal (terminal no. 8) of the product to the ground. Do not carry out daisy-chained inter-ground terminal wiring.**
- **The product is sensitive to static electricity; exercise care in operating it. Before you operate the product, touch a nearby metal part to discharge static electricity.**
- **If the ambient temperature is 50 °C or more, please use the cable that the rated temperature is 70 °C or more.**

4. MAINTENANCE

The product starts running immediately when the power is turned on; however, it needs 10 to 15 minutes of warm-up before it meets the specified performance.

4.1 Calibration Apparatus

- A DC voltage/current standard (YOKOGAWA GS200 or the equivalent)
- A digital multimater (YOKOGAWA DM7560 or the equivalent)
- A precision resistor of 250 Ω ± 0.01%, 1 W

4.2 Calibration Procedure

1. Connect the instruments as shown below. First adjust the output-1 signal and then the output-2 signal.

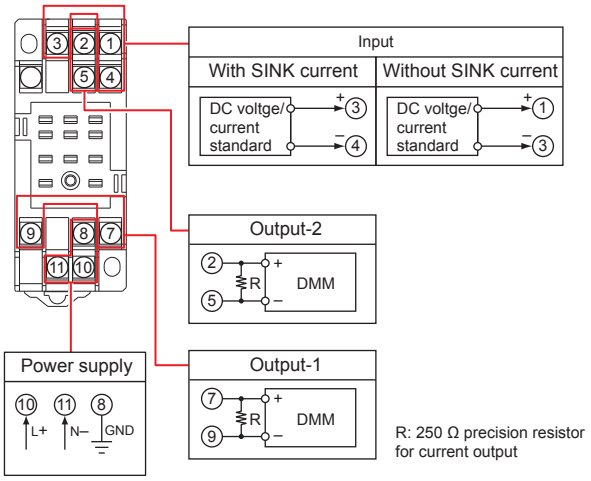

2. Use the DC voltage/current standard and apply input signals equivalent to 0, 6.25, 25, 56.25, and 100% of the input span to the product.
3. Check to see the corresponding output voltages are 0, 25, 50, 75, and 100% respectively and within the specified accuracy rating. "R" is used for current output.

- If the output signals are out of the accuracy rating range, adjust the output signal level using the zero and span adjustment volumes on front face of the product.

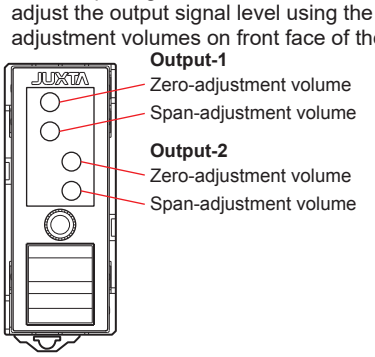

5. SAFETY AND EMC STANDARDS

The following will be acquired.

Safety:

IEC/EN 61010-1 compliance (CE)
IEC/EN 61010-2-030 compliance (CE)
CAN/CSA-C22.2 No.61010-1 (CSA)
CAN/CSA-C22.2 No.61010-2-030 (CSA)
UL61010-1 (CSA NRTL/C)
UL61010-2-030 (CSA NRTL/C)

Overvoltage category: II
Pollution degree: 2
Measurement category: O (other)
Rated power supply voltage: 15-30 V DC (±10%) 3.6 W or
100-240V AC/DC (±10%)
50/60 Hz 3.6 W 8.8 VA
Rated voltage (Input signal) : 10 V DC
Rated voltage (Analog output signal): −10 to +10 V DC,
0 to 20 mA DC
Rated transient overvoltage: 1500 V (*)

* This is a reference safety standard value for the measurement Category O. This value is not necessarily a guarantee of instrument performance.

CAUTION

This instrument is for Measurement Category O (other). Do not use it for measurements in locations falling under Measurement Categories II, III, and IV.

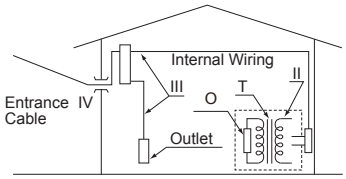

Measurement category		Description	Remarks
O	(other)	For measurements performed on circuits not directly connected to MAINS.	
II	CAT.II	For measurements performed on circuits directly connected to the low-voltage installation.	Appliances, portable equipments, etc.
III	CAT.III	For measurements performed in the building installation.	Distribution board, circuit breaker, etc.
IV	CAT.IV	For measurements performed at the source of the low-voltage installation.	Overhead wire, cable systems, etc.

EMC standards:

- CE:
  EN 61326-1 Class A, Table 2
  EN 61326-2-3
  * The instrument continues to operate at a measurement accuracy of within ±20% of the range during testing.
  EN 55011 Class A, Group 1
  EN 61000-3-2
  EN 61000-3-3
- RCM:
  EN 55011 Class A, Group 1
- KC:
  Electromagnetic wave interference prevention standard, electromagnetic wave protection standard

CAUTION

Caution to comply with EMC standards: When operating this instrument by external power supply, use an independent power unit conforming to CE-marking. Be sure to use the lightning arrester to comply EMC standards.

Note: When option code /C0 or /FB is specified, the conformity to the safety and EMC standards is excluded.

6. ENVIRONMENT STANDARD

EU RoHS directive: EN IEC 63000
(However, when option code /C0 or /FB is specified, CE marking is not applicable because the product does not comply with the Safety and EMC standards.)

7. TRANSPORT AND STORAGE CONDITIONS

- Temperature: -25 to 70°C
- Temperature change rate: 20°C per hour or less
- Humidity: 5 to 95%RH (no condensation)

CAUTION

Keep this product in a conductive bag when plugged out, during transport or storage.