Instruction Manual

Model SC4A, SC42, SX42 Specific Conductivity sensors

CE



YOKOGAWA

IM 12D7J1-11E-E
8th edition

(BG)
Всички улътвания за продукти от серията ATEX Ex се предлагат на английски език. Ако се нуждаете от улътвания за продукти от серията Ex на родния ви език, се свържете с най-близкия офис или представителство на фирма Yokogawa.

(CZ)
Všechny uživatelské příručky pro výrobky, na něž se vztahuje nevýbušné schváleni ATEX Ex, jsou dostupné v angličtině. Požadujete-li pokyny týkající se výrobků s nevýbušným schválením ve vašem lokálním jazyku, kontaktujte prosím vaši nejbližší reprezentačni kancelář Yokogawa.

(D)
Alle Betriebsanleitungen für ATEX Ex bezogene Produkte stehen in den Sprachen Englisch. Sollten Sie die Betriebs- anleitungen für Ex-Produkte in Ihrer Landessprache benötigen, setzen Sie sich bitte mit Ihrem örtlichem Yokogawa-Vertreter in Verbindung.

(DK)
Alle brugervejledninger for produkter relateret til CE er tilgængelige på engelsk. Skulle De ønske yderligere oplysninger om håndtering af CE produkter på eget sprog, kan De rette henvendelse herom til den nærmeste Yokogawa afdeling eller forhandler.

(EST)
Kõik ATEX Ex toodete kasutamisjuhendid on esitatud inglise keeles. Ex seadmete muukeelse dokumentatsiooni saamiseks pöörduge lähima lokagava (Yokogawa) kontori või esindaja poole.

(E)
Todos los manuales de instrucciones para los productos antiexplosivos de ATEX están disponibles en inglés. Si desea solicitar las instrucciones de estos artículos antiexplosivos en su idioma local, deberá ponerse en contacto con la oficina o el representante de Yokogawa más cercano.

(F)
Tous les manuels d'instruction des produits ATEX Ex sont disponibles en langue anglaise. Si vous nécessitez des instructions relatives aux produits Ex dans votre langue, veuillez bien contacter votre représentant Yokogawa le plus proche.

(GB)
All instruction manuals for ATEX Ex related products are available in English. Should you require Ex related instructions in your local language, you are to contact your nearest Yokogawa office or representative.

(GR)
Ολα τα εγχειριδια λειτουργιας των προιοντων με ATEX Ex διατιθενται στα Αγγλικα. Σε περιπτωση πον χρειαζεοτε οδηγιεξ σχετικα με Ex στην τοπικη γλωσσα παρακαλονμε επικοινωνηστε με το πλησιεστερο γραφειο τηζ Yokogawa η αντιπροσωπο τηξ.

(H)
Az ATEX Ex mûszerek gépkönyveit angol nyelven adjuk ki. Amennyiben helyi nyelven kérik az Ex eszközök leírásait, kérjük keressék fel a legközelebbi Yokogawa irodát, vagy képviseletet.

(I)
Tutti i manuali operativi di prodotti ATEX contrassegnati con Ex sono disponibili in inglese. Se si desidera ricevere i manuali operativi di prodotti Ex in lingua locale, mettersi in contatto con l'ufficio Yokogawa più vicino o con un rappresentante.

(LV)
Visas ATEX Ex kategorijas izstrâdâjumu Lietoðanas instrukcijas tiek piegâdâtas angïu valodâs. Ja vçlaties saòemt Ex ierîèu dokumentâciju citâ valodâ, Jums ir jâsazinâs ar firmas Jokogava (Yokogawa) tuvâko ofisu vai pârstâvi.

(LT)
Visos gaminiø ATEX Ex kategorijos Eksploatavimo instrukcijos teikiami anglø kalbomis. Norëdami gauti priestaisø Ex dokumentacijà kitomis kalbomis susisiekite su artimiausiu bendrovës Yokogawa biuru arba atstovu.

(M)
Il-manwali kollha ta' l-istruzzjonijiet għal prodotti marbuta ma' ATEX Ex huma disponibbli bl-Ingliż. Jekk tkun teħtieġ struzzjonijiet marbuta ma' Ex fil-lingwa lokali tiegħek, għandek tikkuntattja lill-eqreb rappreżentan jew uffiċċju ta' Yokogawa.

(NL)
Alle handleidingen voor producten die te maken hebben met ATEX explosiebeveiliging (Ex) zijn verkrijgbaar in het Engels. Neem, indien u aanwijzingen op het gebied van explosiebeveiliging nodig hebt in uw eigen taal, contact op met de dichtstbijzijnde vestiging van Yokogawa of met een vertegenwoordiger.

(P)
Todos os manuals de instruções referentes aos produtos Ex da ATEX estão disponíveis em Inglês. Se necessitar de instruções na sua língua relacionadas com produtos Ex, deverá entrar em contacto com a delegação mais próxima ou com um representante da Yokogawa.

(PL)
Wszystkie instrukcje obsługi dla urządzeń w wykonaniu przeciwwybuchowym Ex, zgodnych z wymaganiami ATEX, dostępne są w języku angielskim. Jeżeli wymagana jest instrukcja obsługi w Państwa lokalnym ję zyku, prosimy o kontakt z najbliższym biurem Yokogawy.

(RO)
Toate manualele de instructiuni pentru produsele ATEX Ex sunt in limba engleza. In cazul in care doriti instructiunile in limba locala, trebuie sa contactati cel mai apropiat birou sau reprezentant Yokogawa.

(S)
Alla instruktionsböcker för ATEX Ex (explosionssäkra) produkter är tillgängliga på engelska. Om Ni behöver instruktioner för dessa explosionssäkra produkter på annat språk, skall Ni kontakta närmaste Yokogawakontor eller representant.

(SF)
Kaikkien ATEX Ex-tyyppisten tuotteiden käyttöhjeet ovat saatavilla englannin-. Mikäli tarvitsette Ex-tyyppisten tuotteiden ohjeita omalla paikallisella kielellännne, ottakaa yhteyttä lähimpään Yokogawa-toimistoon tai -edustajaan.

(SK)
Všetky návody na obsluhu pre prístroje s ATEX Ex sú k dispozícii v jazyku anglickom. V prípade potreby návodu pre Ex-prístroje vo Vašom národnom jazyku, skontaktujte prosím miestnu kanceláriu firmy Yokogawa.

(SLO)
Vsi predpisi in navodila za AEX Ex sorodni pridelki so pri roki v angliščini. Èe so Ex sorodna navodila potrebna v vašem tukejnjem jeziku, kontaktirajte vaš najbliši Yokogawa office ili predstaunika.

CONTENTS

1. PREFACE **5**
1.1. Introduction 5
1.2 Unpacking and Checking 5
1.3 Warranty and Service 5
1.4 Serial number definition 6

2. MODEL SC4A **7**
2.1. General Specifications 7
2.1.1. Measuring elements 7
2.1.2. Materials 7
2.1.3. Functional specifications (at 25°C) 7
2.1.4. Dynamic specifications 7
2.1.5. Operating range 8
2.1.7. Shipping details 9
2.1.8. Environmental conditions 10
2.1.9. Mechanical specifications 10
2.2. Installation of SC4A sensors 10
2.2.1. Typical installation SC4A-*-AD with standard options 10
2.2.2. Typical installation SC4A-E-SA (SB, SC) with standard options / spare parts 11
2.2.3. Typical installation SC4A-*-PR 12
2.3. Dimensions SC4A sensors 12
2.4. Wiring SC4A sensors 13
2.5. Modelcode SC4A sensors 13
2.6. Spare parts SC4A 14
2.7. Declaration of Conformity SC4A 15

3. MODEL SC42 **16**
3.1. General Specifications 16
3.1.1. Measuring elements 16
3.1.2. Materials 16
3.1.3. Functional specifications (at 25°C) 16
3.1.4. Dynamic specifications 17
3.1.5. Operating range 17
3.1.6. Regulatory standards 17
3.1.7. Shipping details 18
3.1.8. Environmental conditions 18
3.2. Installation of SC42 sensors 18
3.2.1. Typical installation of SC42 sensor in FF40 Flow fittings/ FS40 Flow fitting assemblies 19
3.2.2. Typical installation of SC42 sensor in FD40 Immersion fitting 22
3.3 Dimensions SC42 sensors. 24
3.4. Wiring SC42 sensors 25
3.5. Modelcode SC42 sensors 26
3.6. Spare parts SC42 26
3.7. Declaration of Conformity SC42 27

4. MODEL SX42 **28**
4.1. General Specifications 28
4.1.1. Measuring elements 28
4.1.2. Materials 28
4.1.3. Functional specifications (at 25°C) 28
4.1.4. Operating range 28
4.1.5. Regulatory standards 29
4.1.6. Shipping details 29
4.1.7. Environmental conditions 29
4.2. Installation of SX42 sensors 30
4.3. Dimensions SX42 sensors 30
4.4. Wiring SX42 sensors 30
4.5. Modelcode SX42 sensors 31
4.6. Spare parts SX42 31
4.7. Declaration of Conformity SX42 32

5. GENERAL CALIBRATION AND MAINTENANCE PROCEDURE **33**
5.1. Calibration of the sensor 33
5.2. Periodic maintenance of the sensor 33

6. CHEMICAL COMPATABILITY CHART **34**

1. PREFACE

1.1. Introduction

The sensor and fitting program for specific conductivity measurement (model SC4A, SC42 and SX42) is designed to meet the most common installation requirements in terms of material compatibility, process connections and flow dynamics. The various installation possibilities are described and illustrated in this Instruction Manual.

Model SC4A sensors, available in a Stainless Steel or Titanium version with integral cable, are intended for the low conductivity applications. These sensors are designed in a convenient compact style, and can be inserted directly in process pipework using available fittings or adapters.

Model SC42 sensors, available in various materials such as Epoxy, Stainless Steel, PTFE and PVDF, are intended to suit most process conditions. The sensors are provided with a connector to fit the Yokogawa WU40 cable. A wide range of flow and immersion fittings makes it possible to install the sensors in a permanent or semi-permanent location.

Model SX42 sensors have a Stainless Steel body and ceramic insulation, especially designed to withstand high temperatures and high pressures. The flanged model has an integral connection box, the threaded models are provided with a connector to fit the Yokogawa WU40 cable.

All sensors have a pre-calibrated cell constant and a built-in temperature element for automatic temperature compensation. For metal sensors a 3.1 material certificate is included. The sensors are ATEX certified for installation in zone 0 environments when connected to a certified intrinsically safe Yokogawa analyser, model SC202S or FLXA21 or a certified intrinsically safe circuit with defined output parameters (see General Specifications of each sensor for details).

1.2 Unpacking and Checking

Upon delivery, unpack the sensor carefully and inspect it to ensure that it is not damaged during shipment. If damage is found, retain the original packing material and immediately notify the carrier and the relevant local Yokogawa Sales office. Make sure the Model Code and Serial Number on the sensor are the same as on the packing list. Also check if option(s) that were ordered, are included and correct.

1.3 Warranty and Service

Yokogawa products are guaranteed free from defects in workmanship and materials under normal use and service for a period of (typically) 12 months from the date of shipment from the manufacturer. Individual Sales organizations can deviate from the typical warranty period, and the conditions of sale relating to the original purchase order should be consulted.
Damage caused by wear and tear, inadequate maintenance, corrosion, or by the effects of chemical processes is excluded from this warranty coverage. In the event of a warranty claim, the defective goods should be sent (freight paid) to the Service Department of the relevant Yokogawa Sales office for repair or replacement (at Yokogawa's discretion).

The following information must be included in the letter accompanying the returned goods:

- Model Code and Serial Number.
- Original Purchase Order and Date.
- Length of time in service and description of the process.
- Description of the fault and circumstances of the failure.
- Process/environmental conditions that may be related to the failure of the sensor.
- Statement as to whether warranty or nonwarranty service is requested.
- Complete shipping and billing instructions for return of material, plus the name and phone number of a contact person that can be reached for further information.
- Clean Statement Returned goods that have been in contact with process fluids must be decontaminated and disinfected prior to shipment. Goods should carry a certificate to this effect, for the health and safety of our employees. Material Safety Data sheets must be included for all components of the process to which the sensor (options) have been exposed.

1.4 Serial Number definition

The serial number is defined by nine (9) alphanumeric characters:

X_1X_2 Production location, N3 for Yokogawa Process Analyzers Europe B.V.

X_3X_4 Year/Month code

$X_5X_6X_7X_8X_9$ Tracking number

Example: N3P600028

Method used for year/month numbering

Table 1: Production Year code

Year	Year code	Year	Year code
2014	P	2026	3
2015	R	2027	4
2016	S	2028	5
2017	T	2029	6
2018	U	2030	7
2019	V	2031	8
2020	W	2032	9
2021	X	2033	A
2022	Y	2034	B
2023	Z	2035	C
2024	1	2036	D
2025	2	2037	E

Table 2: Production Month code

Month	Month code
January	1
February	2
March	3
April	4
May	5
June	6
July	7
August	8
September	9
October	A
November	B
December	C

2. MODEL SC4A

2.1. General Specifications

2.1.1. Measuring elements

2-electrode measuring system
Pt1000 temperature sensor

2.1.2. Materials

Wetted parts sensor:

Body & electrodes	SC4A-T-AD	: Titanium grade 2 or 3
	SC4A-S-AD	: Stainless Steel AISI 316L
	SC4A-E-SA (SB, SC)	: Stainless Steel AISI 316L
	SC4A-T-PR	: Titanium grade 2 or 3
	SC4A-S-PR	: Stainless Steel AISI 316L
O-ring	SC4A-*-AD	: Viton
	SC4A-E-SA (SB, SC)	: EPDM FDA approved
	SC4A-*-PR	: Viton
Insulation		: PEEK 450G, FDA migration tested

Wetted parts adapters/fitting:

/PS, /FF	SC4A-*-AD	: Stainless Steel AISI 316L
/PF	SC4A-*-AD	: PVDF
/SA1(2), /SB1(2), /SC1	SC4A-E-SA (SB, SC)	: Stainless Steel AISI 316L

Cable:

Conductors	: tinned copper 0.6 mm2
Outside shield	: braid, tinned copper, 85% coverage
Insulator	: Polyester for conductors, for colors see Section 2.4 TPE-O for outer jacket, color black

2.1.3. Functional specifications (at 25°C)

Temperature element	: Pt1000 to IEC 751
Nominal Cell Constant (C.C.)	: 0.02 cm^{-1} or 0.1 cm^{-1}

Note: The SC4A temperature sensor is designed for cell compensation and for indication. It is **NOT** designed for process temperature control.

2.1.4. Dynamic specifications

Response time temperature t_{90}	: < 1 min.

2.1.5. Operating range

Conductivity at actual process temperature	: 1 µS * C.C. – 50 mS * C.C.
Temperature Stainless Steel & Titanium type	: 0°C to 110°C (32°F to 230°F) : 135°C (275°F) for a short period of time during sterilization.
Temperature in combination with PVDF fitting	: 0°C to 80°C (32°F to 176°F)
Pressure Stainless Steel & Titanium type	: 0 to 10 bar (0 to 142 PSIG)
Pressure in combination with PVDF fitting	: See Fig. 1
Cable length	: max. 60 meter with WU40 cable in combination with WF10 cable and BA10 junction box

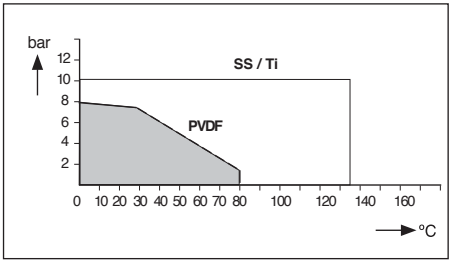

Fig. 1 pressure vs. process temperature

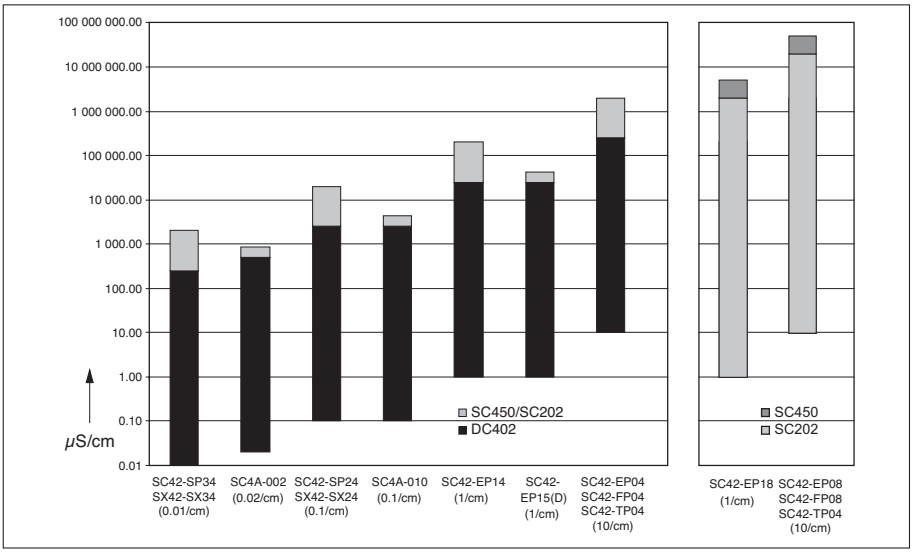

Fig. 2 Measuring range of conductivity sensors

2.1.6. Regulatory standards

CE : Decision 768/2008/EC CE N200

- ATEX : Directive 94/9/EC, as amended by Regulation (EC) no. 1882/2003

Certificate no. : DEKRA 14ATEX0074 X
Ex II 1 G Ex ia IIC T4… T6 Ga

Electrical data : For sensor input circuit connected to
A certified intrinsically safe circuit with the following maximum values:
Ui = 14.4 V; Ii = 116.5 mA; Pi = 0.342 W
or
Certified intrinsically safe Yokogawa Contact Conductivity transmitter Model FLXA21 series
or
Model SC202S series.
The effective internal capacitance Ci and the effective internal inductance Li of the sensor depends only upon the properties and length of the integral cable.

Special conditions (X) : T6 for Tamb. -30°C to 40°C
T5 for Tamb. -30°C to 95°C
T4 for Tamb. -30°C to 130°C

WARNING

Impact on the product shall be avoided.
Electrostatic charges on the enclosure shall be avoided.
From the safety point of view the circuits shall be assumed to be connected to earth.

- Pressure : Directive 97/23/EC, as amended by Regulation (EC) no. 1882/2003

Applying article : 3.3 (Sound Engineering Practice)

- RoHS : Directive 2011/65/EU

Applying category : 9 (Industrial monitoring and control instruments)

IECEx

Applying standards : IEC 60079-0: 2011
IEC 60079-11: 2011
IEC 60079-26: 2006

Certificate no. : IECEx DEK 14.0032X
Ex ia IIC T4…T6 Ga

2.1.7. Shipping details

Package size (LxWxH)	: 220 x 220 x 90 mm (8.7 x 8.7 x 3.6 inch)
Package weight	: 0.5 to1.7 kg (1.1 to 3.8 lbs), depends on sensor type and cable length

2.1.8. Environmental conditions

Storage temperature	: -30°C to 50°C (-22°F to 122°F)

2.1.9. Mechanical specifications

Surface roughness	SC4A-*-AD	: 0.8 µm
	SC4A-E-SA (SB, SC)	: 0.5 µm
	SC4A-*-PR	: 0.8 µm

2.2. Installation of SC4A sensors

For optimum measurement results, the SC4A sensor should be installed in a location that offers an acceptable representation of the process composition and DOES NOT exceed the specifications of the sensor.

2.2.1. Typical installation SC4A-*-AD with standard options

The SC4A-*-AD sensor can be installed in the process using optional ¾" NPT adapters. These adapters are available in Stainless Steel (/PS) and in PVDF (/PF); see figure 3 for the mounting sequence. The sensor can also be installed in an optional Stainless Steel flow fitting (/FF) using option /PS, see figure 4 for details.

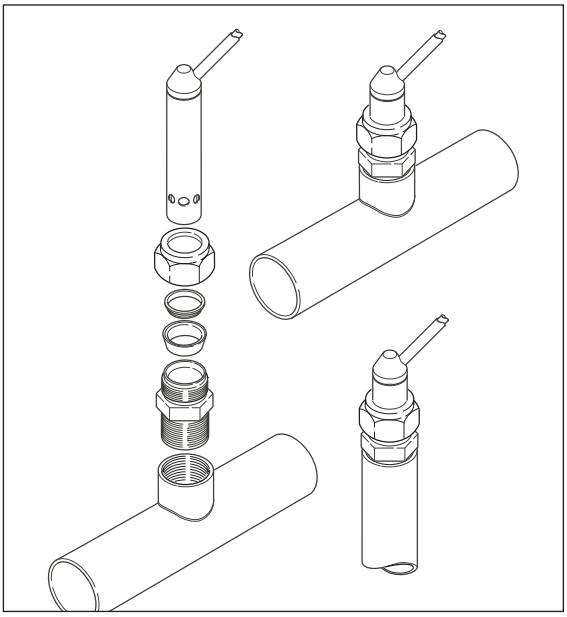

Fig. 3 Mounted sensor with the option /PS and /PF

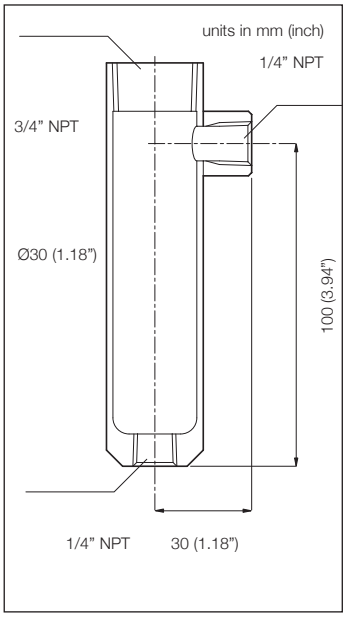

Fig. 4 Dimensional drawing /FF

2.2.2. Typical installation SC4A-E-SA (SB, SC) with standard options / spare parts

The typical installation of the SC4A-E-SA sensor is done by using a standardized 25 mm port. Stainless Steel welding sockets are available as straight version (spare part /SA1) or 15° angled version (spare part /SA2). Both versions are delivered with mounting nut.

In figure 5 an example is shown how to install the sensor using spare part /SA1.
Sensors SC4A-E-SB and SC4A-E-SC are installed by tri-clamp method.
For the SB version two Stainless Steel tri-clamps are available, in a 1" size (spare part /SB1) or in a 1½" size (spare part /SB2).
The SC version has just one Stainless Steel tri-clamp in a 2" size (spare part /SC1).

In figure 6 an example is shown how to install the sensor using one of these tri-clamps.

Ordering information for spare parts can be found in Section 2.6.

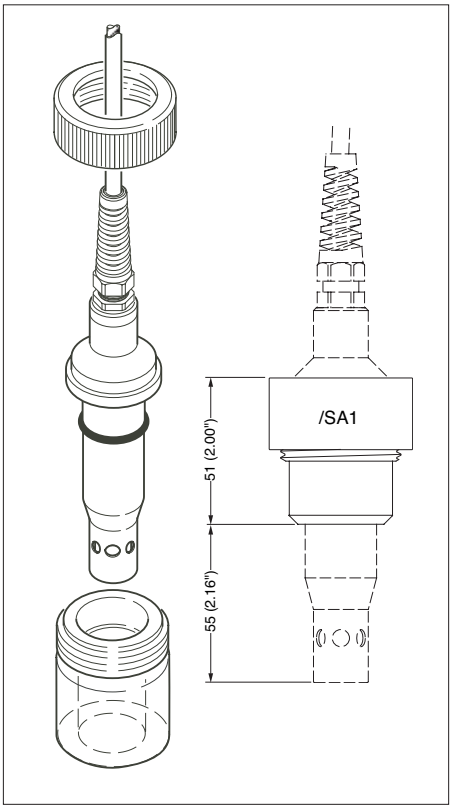

Fig. 5 Mounted SC4A-E-SA sensor with spare part /SA1 (K1542FA)

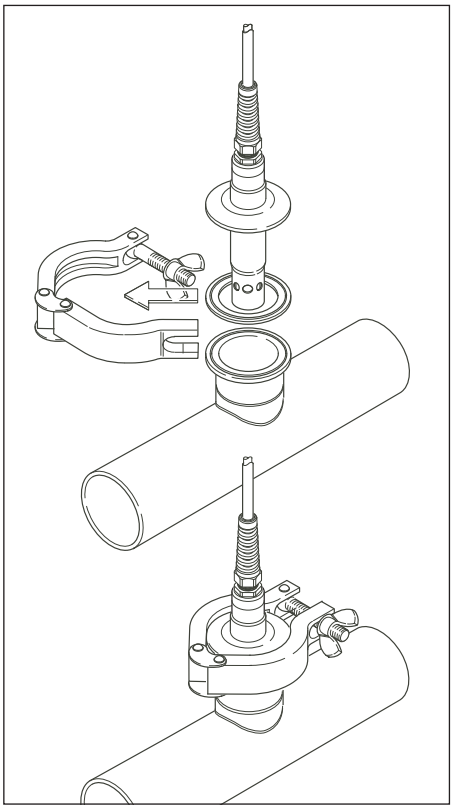

Fig. 6 Mounted SC4A-E-SB (SC) sensor with tri-clamp

2.2.3. Typical installation SC4A-*-PR

The installation of the SC4A-*-PR sensor is done using the Model PR10 retractable fitting.
The mounting procedure of the sensor is explained in the Instruction Manual of this fitting.

2.3. Dimensions SC4A sensors

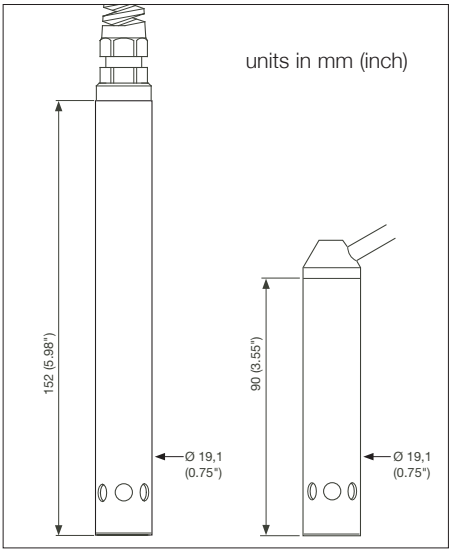

Fig. 7 SC4A-*-AD-15 SC4A-*-AD-09

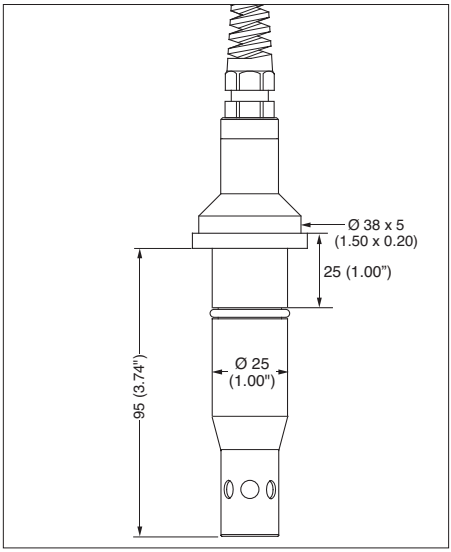

Fig. 8 SC4A-E-SA

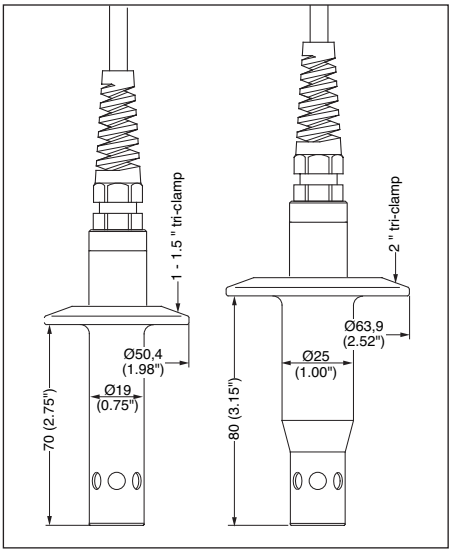

Fig. 9 SC4A-E-SB SC4A-E-SC

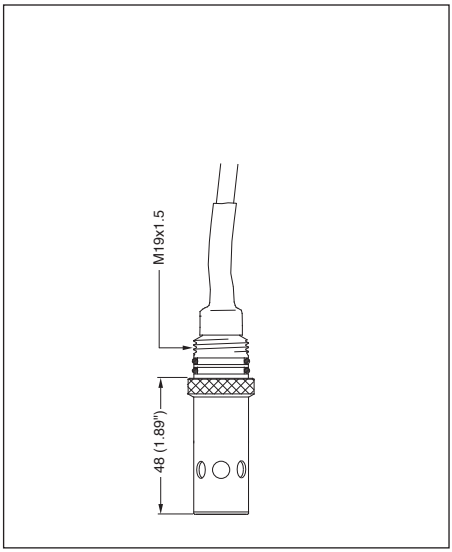

Fig. 10 SC4A-*-PR

2.4. Wiring SC4A sensors

The SC4A sensors are provided with a integral sensor cable up to 20 meters. When a longer cable run is necessary (maximum cable run is 60 meters), this can be done by using the WF10 extension cable in combination with the BA10 connection box. The connection of the integral cable and WF10 cable to the Yokogawa Contact Conductivity analyser are given in table 3.

Table 3. Definition integral sensor cable, WF10 cable and analyser

Cable wire color	Cable wire color WF10	SC terminal #	Signal description
White	Red	11	Temperature
Brown	Blue	12	Temperature
Green	Clear (Core of Brown coax)	13	Outer electrode
Yellow	Yellow	14	Outer electrode
Black	Clear (Core of White coax)	15	Inner electrode
Pink	White (Shield of White coax)	16	Inner electrode

2.5. Modelcode SC4A sensors

Model Code	Suffix Code	Option Code	Description
SC4A			19 mm conductivity sensor
Material	- T		Titanium Grade 2 or 3
	- S		Stainless Steel AISI 316L
	- E		EPDM FDA
Fitting type	- AD		For adapter mounting
	- PR		For retractable mounting
	- SA		For sanitary purposes
	- SB		1-1½" tri-clamp
	- SC		2" tri-clamp
Sensor length	- 09		9 cm
	- 15		15 cm
	- NN		Fixed length
Cell Constant	- 002		0.02 cm^{-1}
	- 010		0.1 cm^{-1}
Cable length	- 03		3 meter
	- 05		5 meter
	- 10		10 meter
	- 15		15 meter
	- 20		20 meter
Temperature element	- T1		Pt1000
Options - AD		/PS	3/4" NPT adapter, Stainless Steel
		/PF	3/4" NPT adapter, PVDF
		/FF	Flow fitting, Stainless Steel
Test Certificate *		/Q	Quality Inspection Certificate

* 3.1 Material Certificate according to EN 10204 is supplied as standard

2.6. Spare parts SC4A

Adapters SC4A-*-AD sensor				
Part no.	Description	Process connection	Material	Quantity
K1542DF	/PS	3/4" NPT adapter	Stainless Steel	1
K1542CW	/PF	3/4" NPT adapter	PVDF	1
K1598AC	/FF	Flow fitting	Stainless Steel	1
Spare parts for adapters SC4A-*-AD sensor				
Part no.	Description			Quantity
K1500DY	Clamp ring set for /PS			1
Adapters SC4A-E-SA sensor				
Part no.	Description	Process connection	Material	Quantity
K1542FA	/SA1	Straight welding socket	Stainless steel	1
K1542FB	/SA2	Angled welding socket	Stainless steel	1
Spare parts for adapters SC4A-E-SA sensor				
Part no.	Description			Quantity
K1520EJ	Straight weld-in adapter without mounting nut, Stainless Steel			1
K1520EK	Angled weld-in adapter without mounting nut, Stainless Steel			1
Spare parts for SC4A-E-SA sensor				
Part no.	Description			Quantity
K1542DL	O-ring set, EPDM FDA, 20.3 x 2.62			3
K1542DK	O-ring set, Viton, 20.3 x 2.62			3
Adapters SC4A-E-SB sensor				
Part no.	Description	Process connection	Material	Quantity
K1542FC	/SB1	Tri-clamp 1"	Stainless Steel	1
K1542FF	/SB2	Tri-clamp 1½"	Stainless Steel	1
Spare parts for adapters SC4A-E-SB sensor				
Part no.	Description			Quantity
K1500BN	Clamp seal ring, EPDM FDA, 1" ~ 1½"			1
K1542DG	Clamp seal ring, Viton, 1"			3
K1542DH	Clamp seal ring, Viton, 1½"			3
Adapters SC4A-E-SC sensor				
Part no.	Description	Process connection	Material	Quantity
K1542FE	/SC1	Tri-clamp 2"	Stainless Steel	1
Spare parts for adapters SC4A-E-SC sensor				
Part no.	Description			Quantity
K1500BP	Clamp seal ring, EPDM FDA, 2"			1
K1542DJ	Clamp seal ring, Viton, 2"			3
Spare parts for SC4A-*-PR sensor				
Part no.	Description			Quantity
K1500BE	O-ring set, Viton, 15.6 x 1.78			10
K1500ED	O-ring set, Kalrez, 15.6 x 1.78			1

We: **Yokogawa Process Analyzers Europe B.V.**
Euroweg 2
3825 HD Amersfoort
The Netherlands

herewith declare under our sole responsibility that the product, model: **SC4A**
further specified with model suffix- and option codes: **As listed in Section 2.5**
is manufactured in accordance with the requirements for CE-marking of products as stated in EC Decision:

768/2008/EC on a common framework for the marketing of products

by applying the following standards:

EN-ISO 9001: 2008 Quality management systems - Requirements

Subject product is:

- In compliance with the essential requirements of the specific product legislation:
- **Pressure Equipment** **Directive 97/23/EC (PED)**
  As amended by Regulation (EC) no. 1882/2003, by applying:
  Article 3.3: Sound Engineering Practice
- **RoHS** **Directive 2011/65/EU**
  by applying:
  Category 9: Industrial monitoring and control instruments
- **Explosive atmospheres** **Directive 94/9/EC (ATEX)**
  As amended by Regulation (EC) no. 1882/2003, by applying the following standards:
  EN 60079-0: 2012 Explosive atmospheres – Part 0: Equipment – General requirements
  EN 60079-11: 2012 Explosive atmospheres – Part 11: Equipment protection by intrinsic safety "i"
  EN 60079-26: 2007 Explosive atmospheres – Part 26: Equipment with equipment protection level (EPL) Ga

  The provisions fulfilled are: Ⓔx II 1 G Ex ia IIC T4…T6 Ga

  Number of the EC-type Examination Certificate: DEKRA 14ATEX0074 X
  Name of the notified body: DEKRA Certification B.V.
  Identification number of the notified body: 0344
  Address of the notified body: Meander 1051, 6825 MJ Arnhem, The Netherlands

- Produced according to appropriate quality control procedures.

The CE-mark has been affixed on the product in 2014 for the first time.

If applicable, the product is checked against the latest official released revision of the standards mentioned above; differences do not affect the certified product identified on this declaration.



Amersfoort, 1 July 2014
H. Leijten, General Manager
Yokogawa Process Analyzers Europe B.V.

3. MODEL SC42

3.1. General Specifications

3.1.1. Measuring elements

measuring system:
2-electrode for SC42-SP series; SC42-EP04 (EP14); SC42-FP04 (TP04); SC42-EP15 (EP16) series
4-electrode for SC42-EP08 (EP18); SC42-FP08 (TP08)
Pt1000 temperature sensor

3.1.2. Materials

Wetted parts sensor:

Body	SC42-SP series	: Stainless Steel AISI 316L
	SC42-EP series	: Glass filled epoxy resin
	SC42-FP series	: PVDF, Glass
	SC42-TP series	: Glass filled PTFE, Glass
Electrodes	SC42-SP series	: Stainless Steel AISI 316L
	SC42-EP series	: Graphite impregnated with epoxy resin
	SC42-FP series	: Platinum
	SC42-TP series	: Platinum
O-ring	SC42-SP series	: Viton
	SC42-FP series	: Viton
	SC42-TP series	: Kalrez™
	For the SC42-FP series and SC42-TP series the supplied O-ring for sealing in the fitting is Viton.	
Insulation	SC42-SP series	: PEEK 450G, FDA migration tested

Connector:

Contacts		: gold plated
Plug		: Polyamide

3.1.3. Functional specifications (at 25°C)

Temperature element		: Pt1000 to IEC 751
Nominal Cell Constant	SC42-SP24	: 0.1 cm^{-1}
	SC42-SP34	: 0.01 cm^{-1}
	SC42-EP04 (EP08)	: 10 cm^{-1}
	SC42-EP14 (EP18)	: 1 cm^{-1}
	SC42-EP15 (EP16)	: 1 cm^{-1}
	SC42-FP series	: 10 cm^{-1}
	SC42-TP series	: 10 cm^{-1}

Note: The SC42 temperature sensor is designed for cell compensation and for indication.
It is **NOT** designed for process temperature control.

3.1.4. Dynamic specifications

Response time temperature t_{90}

SC42-SP24	: < 3 min.
SC42-SP34	: < 1 min.
SC42-EP04 (EP08)	: < 3 min.
SC42-EP14 (EP18)	: < 2 min.
SC42-EP15 (EP16)	: < 3 min.
SC42-FP series	: < 1 min.
SC42-TP series	: < 1 min.

3.1.5. Operating range

Conductivity at actual process temperature : 1 µS * C.C. – 200 mS * C.C.

See Fig. 2: Range abbility of conductivity sensors on page 8

Temperature	SC42-SP series	: 0°C to 150°C (32°F to 302°F)
	SC42-EP series	: 0°C to 110°C (32°F to 230°F)
	SC42-FP series	: 0°C to 110°C (32°F to 230°F)
	SC42-TP series	: 0°C to 110°C (32°F to 230°F)
Pressure	SC42-SP series	: 0 to 10 bar (0 to 142 PSIG)
	SC42-EP series	: 0 to 10 bar (0 to 142 PSIG)
	SC42-FP series	: 0 to 10 bar (0 to 142 PSIG)
	SC42-TP series	: 0 to 2 bar (0 to 28 PSIG)
Cable length		: max. 60 meter with WU40 cable in combination with WF10 cable and BA10 junction box

3.1.6. Regulatory standards

CE : Decision 768/2008/EC CE

- ATEX : Directive 94/9/EC, as amended by Regulation (EC) no. 1882/2003

Certificate no. : DEKRA 14ATEX0074 X

Ex II 1 G Ex ia IIC T3…T6 Ga

Electrical data : For sensor input circuit connected to
A certified intrinsically safe circuit with the following maximum values:
Ui = 14.4 V; Ii = 116.5 mA; Pi = 0.342 W
or
Certified intrinsically safe Yokogawa Contact Conductivity transmitter Model FLXA21 series
or
Model SC202S series.
The effective internal capacitance Ci and the effective internal inductance Li of the sensor depends only upon the properties and length of the connected cable.

Special conditions (X)	: T6 for Tamb. -30°C to 40°C T5 for Tamb. -30°C to 95°C T4 for Tamb. -30°C to 130°C T3 for Tamb. -30°C to 165°C
WARNING	Electrostatic charges on the enclosure shall be avoided. From the safety point of view the circuits shall be assumed to be connected to earth.
- Pressure	: Directive 97/23/EC, as amended by Regulation (EC) no. 1882/2003
Applying article	: 3.3 (Sound Engineering Practice)
- RoHS	: Directive 2011/65/EU
Applying category	: 9 (Industrial monitoring and control instruments)

IECEx

Applying standards	: IEC 60079-0: 2011 IEC 60079-11: 2011 IEC 60079-26: 2006
Certificate no.	: IECEx DEK 14.0032X Ex ia IIC T3…T6 Ga

3.1.7. Shipping details

Package size (LxWxH)	: 300 x 95 x 73 mm (11.8 x 3.7 x 2.9 inch)
Package weight	: 0.3 to 0.8 kg (0.7 to 1.8 lbs), depends on sensor type

3.1.8. Environmental conditions

Storage temperature	: -30°C to 50°C (-22°F to 122°F)

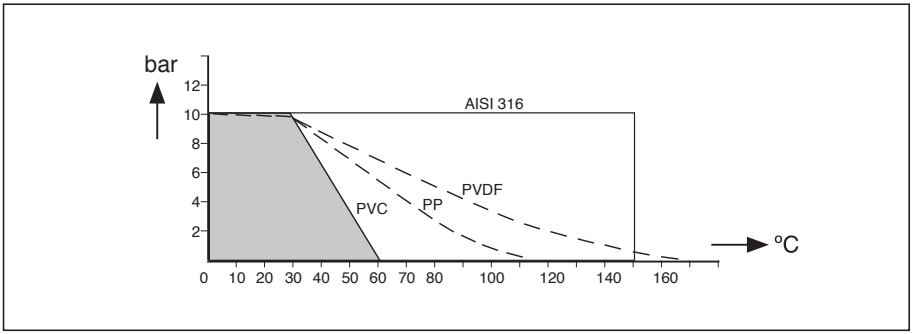

Fig. 11 Material vs. temperature/pressure

3.2. Installation of SC42 sensors

To install the SC42 conductivity sensors in a permanent or semi-permanent location, Yokogawa can supply a range of flow and immersion fittings. These fittings and sub-assemblies are available in different materials to give the best solution for any process considering chemical resistance, pressure and temperature specifications (see figure 11). Flow fittings are available with optional flange adapters. When installing the SC42 sensor in a fitting, an O-ring is necessary. This O-ring is available in different materials to improve chemical resistance (see Section 3.6 for ordering information).

WARNING If the SC42 sensor is supllied with an O-ring, the O-ring in the fitting must be removed.

3.2.1. Typical installation of SC42 sensor in FF40 Flow fittings/ FS40 Flow fitting assemblies

From a practical point of view, the best mounting place for a conductivity sensor is in a by-pass with a sample valve. For these applications the following Flow fittings/Flow fitting subassemblies are ideal: Model FF40: Flow fitting

Model FS40: Flow fitting subassembly

When using the sensor in combination with a Flow fitting or Flow fitting subassembly, the process flow has to be taken into account when mounting the sensor. For an example see figure 12.

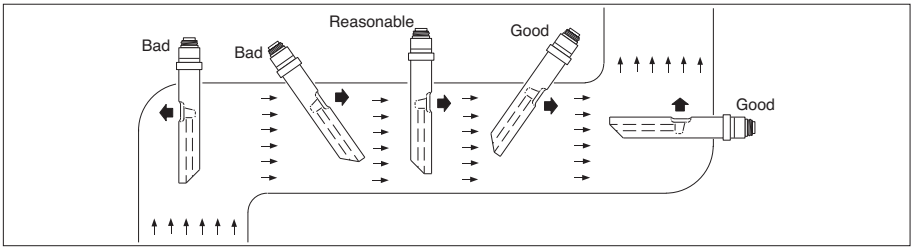

Fig. 12 Mounting position SC42 sensor

Model FF40 Flowfitting Modelcode:

Model code	Suffix code	Option code	Description
FF40			Flow fitting
Material	- P22		Polypropylene (PP)
	- S22		Stainless steel (AISI 316)
	- V22		Polyvinylchloride (PVC)
Optional Flange adapters		/FP1	DN15 PN10 PP
(NPT ½" Male lap joint)		/FP2	DN25 PN10 PP
		/FP3	½" ANSI 150 lbs PP
		/FP4	1" ANSI 150 lbs PP
		/FS1	DN15 PN10 SS AISI 316
		/FS2	DN25 PN10 SS AISI 316
		/FS3	½" ANSI 150 lbs SS AISI 316
		/FS4	1" ANSI 150 lbs AISI 316
Material Certificate		/M	3.1 according to EN-10024 on wetted parts

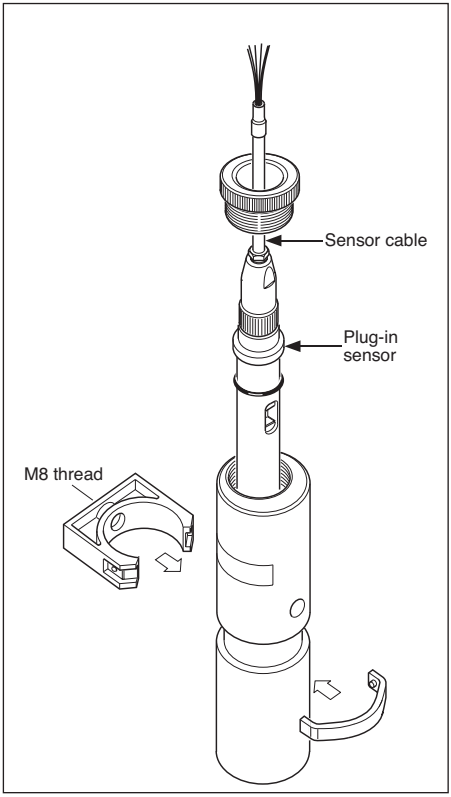

Fig. 13 Installation SC42 in FF40-P22/FF40-V22

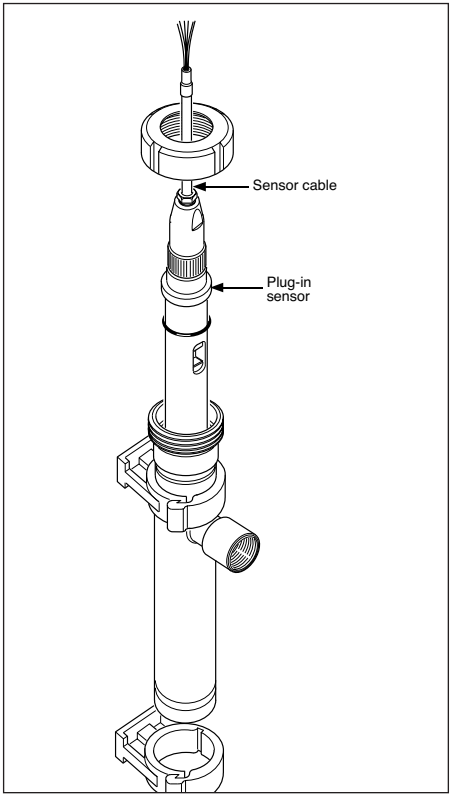

Fig. 14 Installation SC42 in FF40-S22

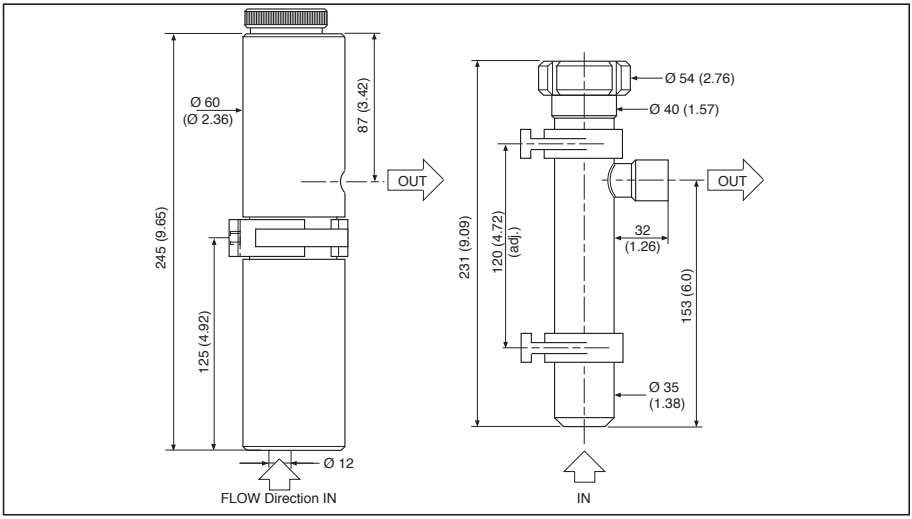

Fig. 15 Dimensions FF40-P22 (V22)

Fig. 16 Dimensions FF40-S22

Optional flange adapters are available for the FF40-P22: option /FP* and for the FF40-S22: option /FS*

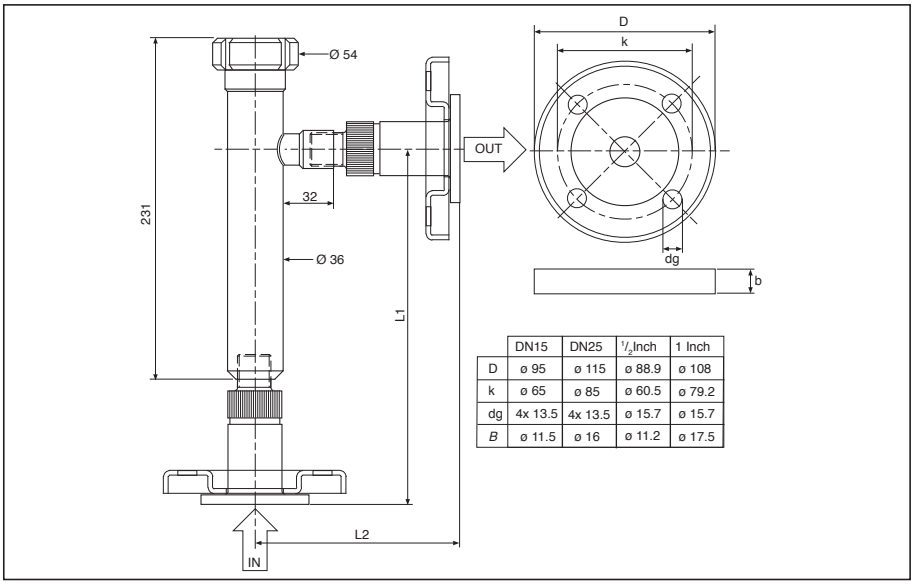

	DN15	DN25	1/2Inch	1 Inch
D	ø 95	ø 115	ø 88.9	ø 108
k	ø 65	ø 85	ø 60.5	ø 79.2
dg	4x 13.5	4x 13.5	ø 15.7	ø 15.7
B	ø 11.5	ø 16	ø 11.2	ø 17.5

Fig. 17 Dimensions of Flange options

Type	**DN15PN10**		**DN25-PN10**		**1/2" 150 lbs**		**1" 150 lbs**	
	L1	L2	L1	L2	L1	L2	L1	L2
FF40-S22	226	123	236	133	8 7/8"	4 13/16"	9 5/16"	5 1/4"
FF40-P22	247	123	236	112	9 3/4"	4 7/8"	9 5/16"	4 7/16"

Model FS40 Subassembly for Flow fitting Modelcode:

Model code	**Suffix code**	**Option code**	**Description**
FS40			Subassembly for Flow fitting
Material	- F22		Polyvinylidenefluoride (PVDF)
	- S22		Stainless steel (AISI 316)
	- S23		Stainless steel (AISI 316) for EP16 model sensor
	- V22		Polyvinylchloride (PVC)
Mounting	- WE		Weld-in socket for - S22 and - S23
			Glue-in socket for - V22
	- PA		Parallel thread, only for - F22, (ISO 228/1-G1 1/4")
	- TP		Tapered pipe thread (1 1/4" NPT)
	- DF		For insertion type sensor with collar piece
			DN25 in combination with - S23
Material Certificate		/M	3.1 according to EN-10024 on wetted parts

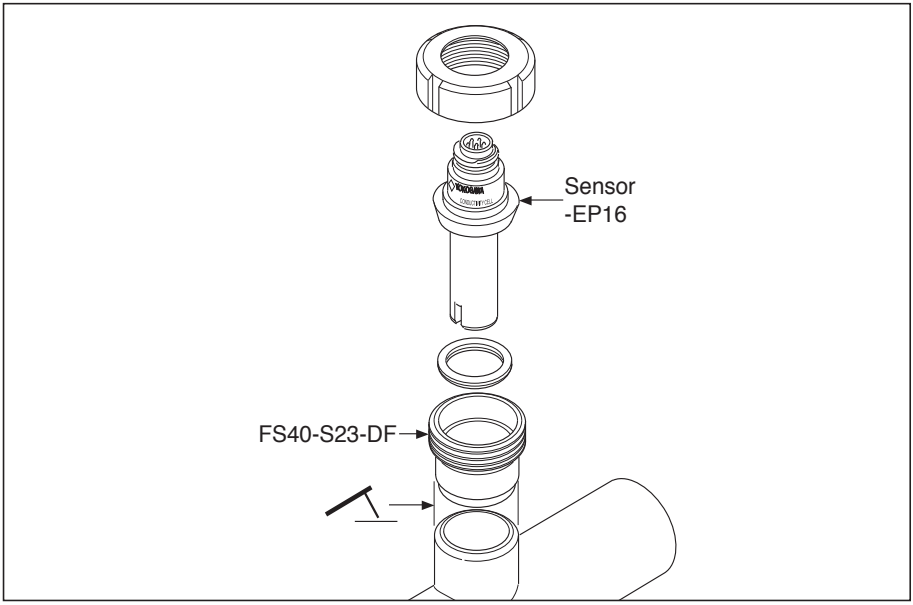

Fig. 18 Installation example of the SC42-EP16 sensor with a FS40-S23-DF subassembly

3.2.2. Typical installation of SC42 sensor in FD40 Immersion fitting

The immersion fittings are for installing the SC42 sensor in tanks, open vessels or drains. If the fitting is mounted in a tank with agitator or if it is placed in a fast flowing process, care must be taken that the fitting is adequately supported. For this reason mounting several flanges can be ordered.

Model code	Suffix code	Option code	Description
FD40V28			Immersion fitting PVC
FD40S28			Immersion fitting Stainless Steel AISI 316
Immersion depth	- ☐☐		Between 05 and 20 decimeter (Example 06 = 6 dm. = 0.6 m.)
Cable length	- NC		No cable
Flange	- FN		No flange
	- F1		PVC flange DN50 PN10
	- F2		PVC flange ANSI 2” 150 lbs
	- F3		Stainless Steel flange DN50 PN10
	- F4		Stainless Steel flange ANSI 2” 150 lbs
Style code	* B		
Protection hose		/PH5	For 5.5 meter mounting cable
		/PH10	For 10 meter mounting cable
Mounting cable		/C05	Length 5,5 meter
		/C10	Length 10 meter
Material Certificate		/M	3.1 according to EN-10024 on SS wetted parts

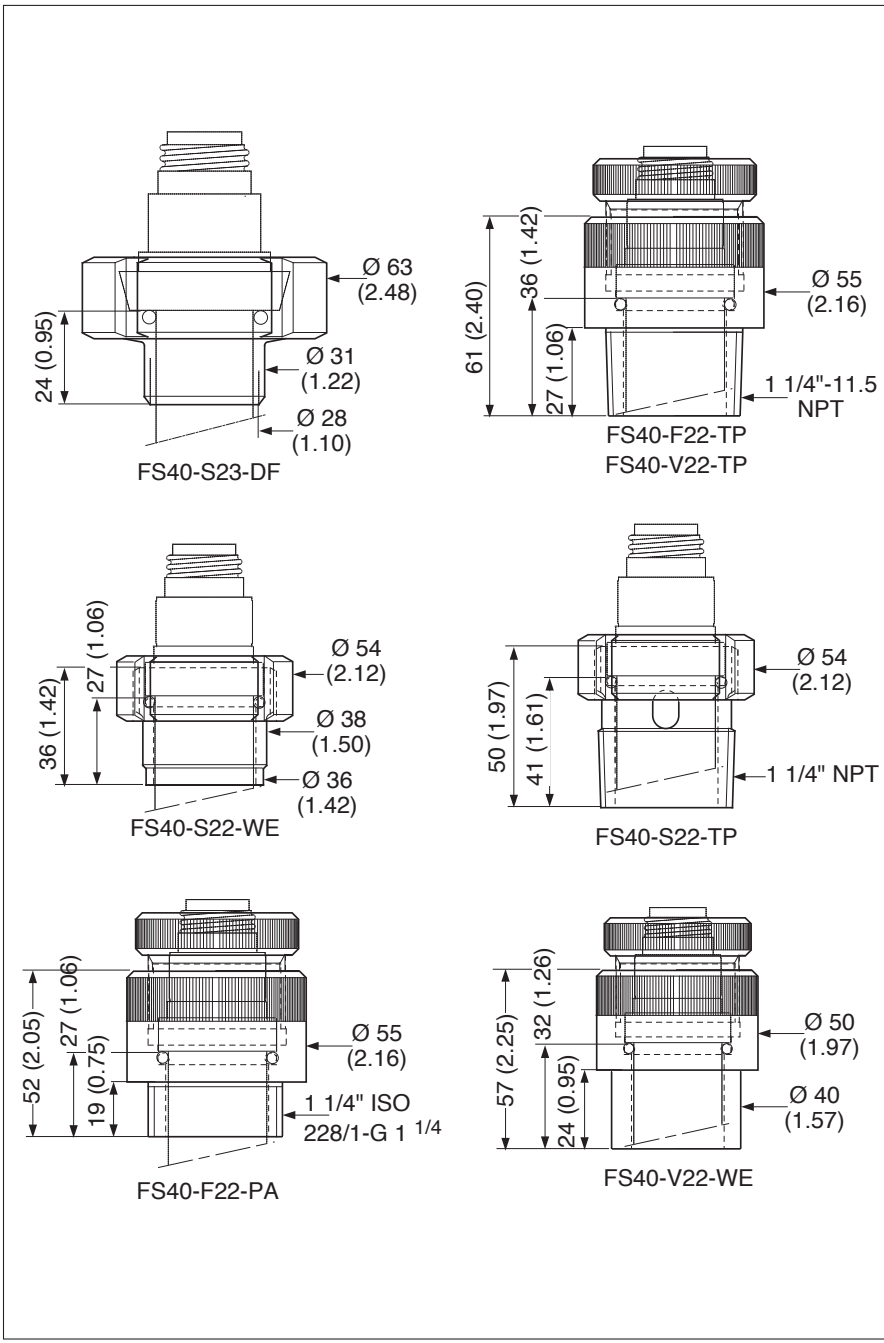

Fig. 19 Dimensions FS40 Flow fitting subassemblies

If it is necessary to use the fitting with another mounting cable length, this cable can be ordered separately as WU40 model:

Model code	Suffix code	Description
WU40		Sensor cable
Cable length	- LH01	1 meter
	- LH02	2 meters
	- LH05	5½ meters
	- LH10	10 meters
	- LH15	15 meters
	- LH20	20 meters
	- LH25	25 meters

3.3 Dimensions SC42 sensors.

SC42-SP34 (L=163 mm)
SC42-SP24 (L=110 mm)

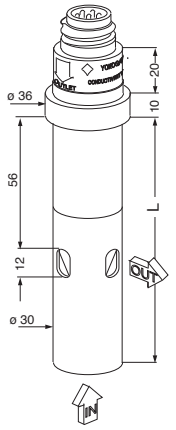

Fig. 20 Dimensions SC42-SP, SC42-EP04 (EP08)

SC42-EP04 (L= 193 mm)
SC42-EP14 (L= 160 mm)
SC42-EP08 (L= 193 mm)
SC42-EP18 (L= 160 mm)

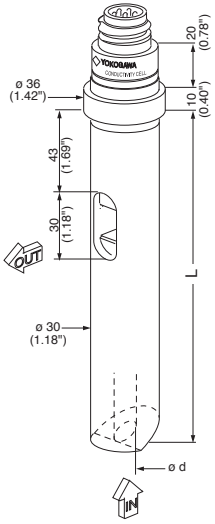

Fig. 21 SC42-EP14 (EP18)

SC42-FP04
SC42-TP04
SC42-FP08
SC42-TP08

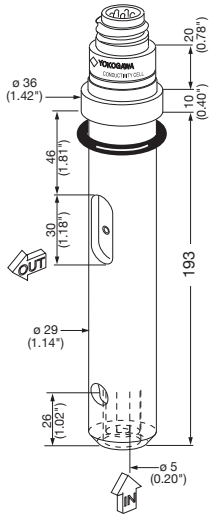

Fig. 22 SC42-FP04 (FP08) and SC42-TP04 (TP08)

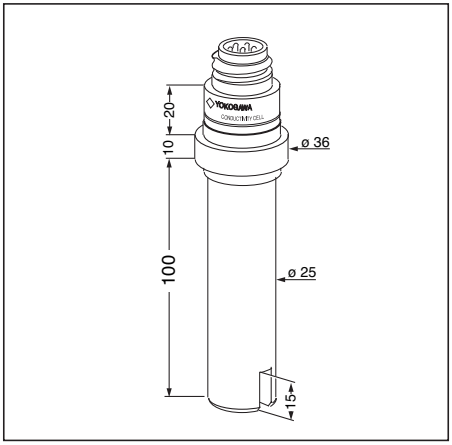

Fig. 23 SC42-EP15

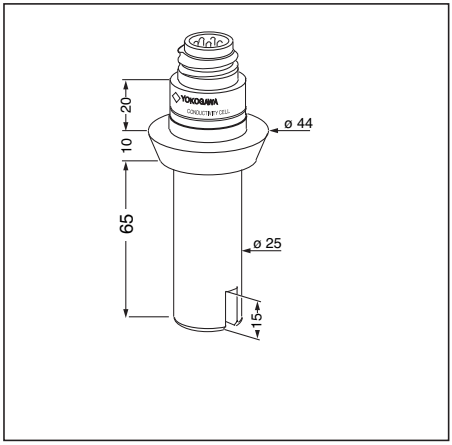

Fig. 24 SC42-EP16

3.4. Wiring SC42 sensors

The SC42 sensors are provided with a fixed connector. The standard cable used to connect the sensor to the analyser is the WU40. This cable is available up to 25 meters. When a longer cable run is necessary (maximum cable run is 60 meters), this can be done by using the WF10 extension cable in combination with the BA10 connection box. The connection of the WU40 cable and WF10 cable to the Yokogawa Contact Conductivity analyser are given in table 4.

Table 4. Definition WU40 cable, WF10 cable and analyser

Cable wire color WU40	Cable wire color WF10	SC analyser terminal #	Signal description
White	Red	11	Temperature
Brown	Blue	12	Temperature
Green	Clear (Core of Brown coax)	13	Outer electrode
Yellow	Yellow	14	Outer electrode
Grey	Clear (Core of White coax)	15	Inner electrode
Pink	White (Shield of White coax)	16	Inner electrode

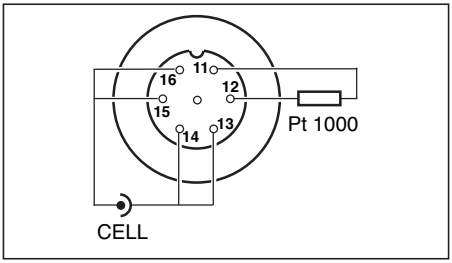

Fig. 24 SC42 2-electrode connector (top view)

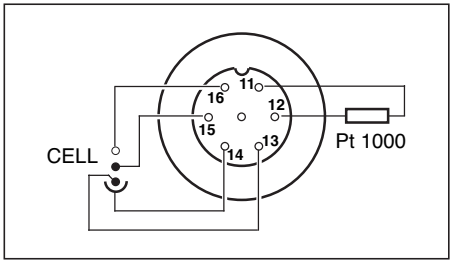

Fig. 25 Connector 4-electrode system (top view)

3.5. Modelcode SC42 sensors

Model code	Suffix code	Option code	Description
SC42			Conductivity sensor 2- or 4 electrode with Pt1000 temperature element
Material	- E		Epoxy / graphite
	- S		Stainless Steel AISI 316L / PEEK
	- F		PVDF / Glass / Platinum
	- T		PTFE / Glass / Platinum
Mounting	P		Plug-in
Cell Constant	0		10 cm^{-1}
	1		1 cm^{-1}
	2		0.1 cm^{-1}
	3		0.01 cm^{-1}
Type	4		2-electrode, flow
	5		2-electrode, insertion
	6		2-electrode, insertion with DN 25 collar
	8		4-electrode, flow
Test Certificate		/Q	Quality Inspection Certificate
Material Certificate*		/M	Material Certificate

* 3.1 Material Certificate according to EN 10204 is supplied as standard for Stainless Steel version.

3.6. Spare parts SC42

Part no.	Description	Quantity
K1500AG	O-ring set for sealing in fitting, Viton, 29.74 x 3.53	5
K1500AH	O-ring set for sealing in fitting, Kalrez, 29.74 x 3.53	1
K1500AK	O-ring set for sealing in fitting, EPDM, 29.74 x 3.53	5
K1500FX	O-ring set for sealing in fitting, Silicone, 29.74 x 3.53	5
K1500HE	Sealing ring for SC42-EP16	5

We: **Yokogawa Process Analyzers Europe B.V.**
Euroweg 2
3825 HD Amersfoort
The Netherlands

herewith declare under our sole responsibility that the product, model: **SC42**
further specified with model suffix- and option codes: **As listed in Section 3.5**
is manufactured in accordance with the requirements for CE-marking of products as stated in EC Decision:

768/2008/EC on a common framework for the marketing of products

by applying the following standards:

EN-ISO 9001: 2008 Quality management systems - Requirements

Subject product is:

- In compliance with the essential requirements of the specific product legislation:
- **Pressure Equipment** **Directive 97/23/EC (PED)**
  As amended by Regulation (EC) no. 1882/2003, by applying:
  Article 3.3: Sound Engineering Practice
- **RoHS** **Directive 2011/65/EU**
  by applying:
  Category 9: Industrial monitoring and control instruments
- **Explosive atmospheres** **Directive 94/9/EC (ATEX)**
  As amended by Regulation (EC) no. 1882/2003, by applying the following standards:
  EN 60079-0: 2012 Explosive atmospheres – Part 0: Equipment – General requirements
  EN 60079-11: 2012 Explosive atmospheres – Part 11: Equipment protection by intrinsic safety “i”
  EN 60079-26: 2007 Explosive atmospheres – Part 26: Equipment with equipment protection level (EPL) Ga

  The provisions fulfilled are: Ⓔx II 1 G Ex ia IIC T3…T6 Ga

  Number of the EC-type Examination Certificate: DEKRA 14ATEX0074 X
  Name of the notified body: DEKRA Certification B.V.
  Identification number of the notified body: 0344
  Address of the notified body: Meander 1051, 6825 MJ Arnhem, The Netherlands

- Produced according to appropriate quality control procedures.

The CE-mark has been affixed on the product in 2014 for the first time.

If applicable, the product is checked against the latest official released revision of the standards mentioned above; differences do not affect the certified product identified on this declaration.



Amersfoort, 1 July 2014
H. Leijten, General Manager
Yokogawa Process Analyzers Europe B.V.

4. MODEL SX42

4.1. General Specifications

4.1.1. Measuring elements

2-electrode measuring system
Pt1000 temperature sensor

4.1.2. Materials

Wetted parts sensor:	Body	: Stainless Steel AISI 316L
	Electrodes	: Stainless Steel AISI 316L
	Insulation	: Ceramic (aluminium oxide)
Connector threaded models:	Contacts	: gold plated
	Plug	: Polyamide
Terminal box flanged models:	Housing	: Aluminium

4.1.3. Functional specifications (at 25°C)

Temperature element	: Pt1000 to IEC 751
Nominal Cell Constant (C.C.) SX42-SX24	: 0.1 cm^{-1}
SX42-SX34	: 0.01 cm^{-1}

Note: The SX42 temperature sensor is designed for cell compensation and for indication. It is **NOT** designed for process temperature control.

4.1.4. Operating range

Conductivity at actual process temperature		: 1 µS * C.C. – 200 mS * C.C. See Fig. 2: Measuring range of conductivity sensors on page 8
Temperature	Threaded models	: 0°C to 200°C (32°F to 392°F)
	Flanged models	: 0°C to 250°C (32°F to 482°F)
	Pressure Threaded models	: 0 to 25 bar (0 to 363 PSIG)
	Flanged model PN63	: 0 to 40 bar (0 to 580 PSIG)
	Flanged model PN40	: 0 to 30 bar (0 to 435 PSIG)
Cable length	Threaded models	: max. 60 meter with WU40 cable in combination with WF10 cable and BA10 junction box
	Flanged models	: max. 60 meter with customer specified high temperature cable

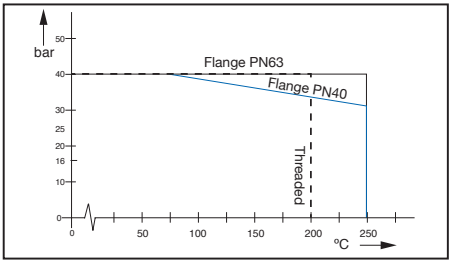

Fig. 26 Pressure vs. process temperature flanged / threaded models SX42

4.1.5. Regulatory standards

CE : Decision 768/2008/EC CE

- ATEX : Directive 94/9/EC, as amended by Regulation (EC) no. 1882/2003

Certificate no. : DEKRA 14ATEX0074 X
Ex II 1 G Ex ia IIC T2…T6 Ga

Electrical data : For sensor input circuit connected to A certified intrinsically safe circuit with the following maximum values:
Ui = 14.4 V; Ii = 116.5 mA; Pi = 0.342 W
or
Certified intrinsically safe Yokogawa Contact Conductivity transmitter Model FLXA21 series or Model SC202S series.
The effective internal capacitance Ci and the effective internal inductance Li of the sensor depends only upon the properties and length of the connected cable.

Special conditions (X) : T6 for Tamb. -30°C to 40°C
T5 for Tamb. -30°C to 95°C
T4 for Tamb. -30°C to 130°C
T3 for Tamb. -30°C to 165°C
T2 for Tamb. -30°C to 275°C

WARNING
Impact on the product shall be avoided.
Electrostatic charges on the enclosure shall be avoided.
From the safety point of view the circuits shall be assumed to be connected to earth.

- Pressure : Directive 97/23/EC, as amended by Regulation (EC) no. 1882/2003

Applying article : 3.3 (Sound Engineering Practice)

- RoHS : Directive 2011/65/EU

Applying category : 9 (Industrial monitoring and control instruments)

IECEx

Applying standards : IEC 60079-0: 2011
IEC 60079-11: 2011
IEC 60079-26: 2006

Certificate no. : IECEx DEK 14.0032X
Ex ia IIC T2…T6 Ga

4.1.6. Shipping details

Package size (LxWxH) Threaded models : 300 x 95 x 73 mm (11.8 x 3.7 x 2.9 inch)
Flanged models : 480 x 275 x 235 mm (18.9 x 10.8 x 9.3 inch)

Package weight Threaded models : 0.5 to 0.7 kg (1.1 to 1.5 lbs)
Flanged models : 5.7 to 6.0 kg (12.6 to 13.2 lbs)

4.1.7. Environmental conditions

Storage temperature : -30°C to 50°C (-22°F to 122°F)

4.2. Installation of SX42 sensors

SX42 threaded models are installed by screw-in (ISO 7/1-R 1" or 1" NPT), and the SX42 flanged models by using the pre-mounted flange (DN50 PN63, DN50 PN40 or ANSI 2" 600 lbs).
Flange dimensions of DN50 PN40 (in red) to be included

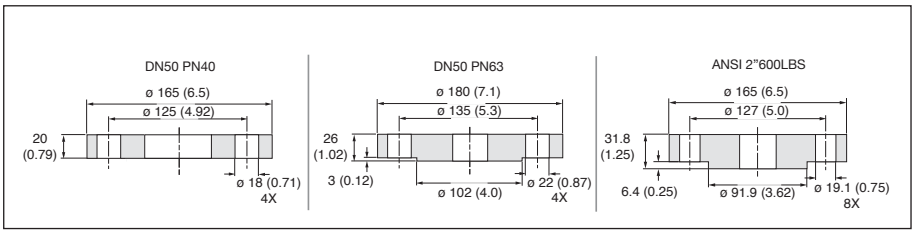

Fig. 27 Flange dimensions SX42 flanged model according EN 1092-1

4.3. Dimensions SX42 sensors

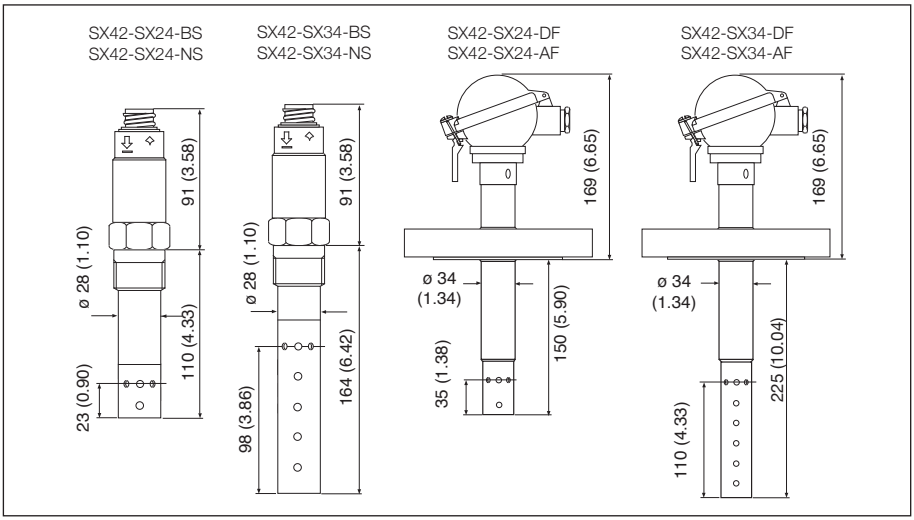

Fig. 28 Dimensions SX42 threaded models and flanged models

4.4. Wiring SX42 sensors

The SX42 threaded models are provided with a fixed connector. The standard cable used to connect these sensors to the analyser is the WU40. This cable is available up to 25 meters. When a longer cable run is necessary (maximum cable run is 60 meters), this can be done by using the WF10 extension cable in combination with the BA10 connection box. The connection of the WU40 cable and WF10 cable to the Yokogawa Contact Conductivity analyser are given in table 5.

Table 5. Definition WU40 cable, WF10 cable and analyser

Cable wire color WU40	Cable wire color WF10	SC analyser terminal #	Signal description
White	Red	11	Temperature
Brown	Blue	12	Temperature
Green	Clear (Core of Brown coax)	13	Outer electrode
Yellow	Yellow	14	Outer electrode
Grey	Clear (Core of White coax)	15	Inner electrode
Pink	White (Shield of White coax)	16	Inner electrode

The SX42 flanged models are provided with a connection box. The cable used to connect these sensors to the analyser has to be a high temperature shielded cable. This cable is not supplied by Yokogawa. The wiring diagram of the flanged models is given in figure 29.

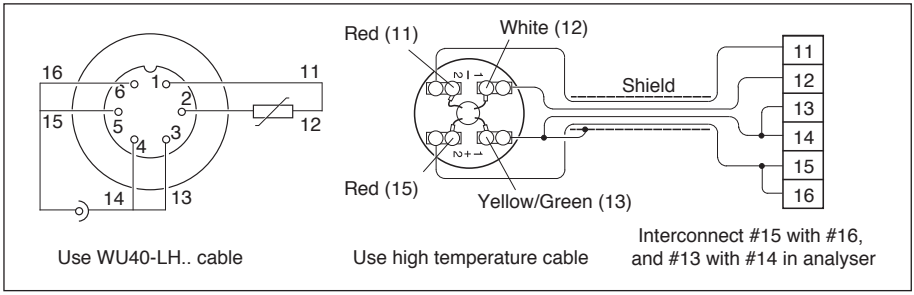

Fig. 29 SX42 threaded models connector (top view) SX42 flanged models wiring diagram

4.5. Modelcode SX42 sensors

Model code	Suffix code	Option code	Description
SX42			Conductivity sensor 2- electrode for high temperature/high pressure with Pt1000 temperature element
Cell Constant	- SX24		0.1 /cm
	- SX34		0.01 /cm
Process connection	- BS		Threaded, ISO 7/1-R 1”
	- NS		Threaded, 1” NPT male
	- DF		Flange, DIN DN50 PN63
	- EF		Flange, DIN DN50 PN40
	- AF		Flange, ANSI 2” 600 lbs
Style code	*A		Style A
Test Certificate		/Q	Quality Inspection Certificate
Material Certificate*		/M	Material Certificate

* 3.1 Material Certificate according to EN 10204 is supplied as standard.

4.6. Spare parts SX42

None.

4.7. Declaration of Conformity SX42

We: **Yokogawa Process Analyzers Europe B.V.**
Euroweg 2
3825 HD Amersfoort
The Netherlands

herewith declare under our sole responsibility that the product, model: **SX42**
further specified with model suffix- and option codes: **As listed in Section 4.5**
is manufactured in accordance with the requirements for CE-marking of products as stated in EC Decision:

768/2008/EC on a common framework for the marketing of products

by applying the following standards:

EN-ISO 9001: 2008 Quality management systems - Requirements

Subject product is:

- In compliance with the essential requirements of the specific product legislation:

- **Pressure Equipment** **Directive 97/23/EC (PED)**
  As amended by Regulation (EC) no. 1882/2003, by applying:
  Article 3.3: Sound Engineering Practice
- **RoHS** **Directive 2011/65/EU**
  by applying:
  Category 9: Industrial monitoring and control instruments
- **Explosive atmospheres** **Directive 94/9/EC (ATEX)**
  As amended by Regulation (EC) no. 1882/2003, by applying the following standards:
  EN 60079-0: 2012 Explosive atmospheres –
  Part 0: Equipment – General requirements
  EN 60079-11: 2012 Explosive atmospheres –
  Part 11: Equipment protection by intrinsic safety “i”
  EN 60079-26: 2007 Explosive atmospheres –
  Part 26: Equipment with equipment protection level (EPL) Ga
  The provisions fulfilled are: Ⓔx II 1 G Ex ia IIC T2…T6 Ga

  Number of the EC-type Examination Certificate: DEKRA 14ATEX0074 X
  Name of the notified body: DEKRA Certification B.V.
  Identification number of the notified body: 0344
  Address of the notified body: Meander 1051, 6825 MJ Arnhem, The Netherlands

- Produced according to appropriate quality control procedures.

The CE-mark has been affixed on the product in 2014 for the first time.

If applicable, the product is checked against the latest official released revision of the standards mentioned above; differences do not affect the certified product identified on this declaration.



Amersfoort, 1 July 2014
H. Leijten, General Manager
Yokogawa Process Analyzers Europe B.V.

5. GENERAL CALIBRATION AND MAINTENANCE PROCEDURE

5.1. Calibration of the sensor

The conductivity sensors are factory calibrated traceable to NIST standards. The cell constant values are indicated on the sensor or on the integral cable of the sensor. The cell constant value can be entered directly in the Yokogawa analyser. The procedure is explained in the Instruction Manual of the analyser. If the sensor has been subject to abrasion (erosion or coating) in the process, re-calibration of the sensor may be necessary. Refer to the Instruction Manual of the analyser for a detailed description.

Note: During calibration the temperature compensation is still active. This means that the display reading refer to the default reference temperature (25 °C).

Calibration is normally carried out by measuring a solution with a known conductivity value at a known temperature. These solutions are commercially available. You can make your own solution by dissolving an amount of salt in water. Table 6 and 7 show some typical conductivity values for Sodium Chloride (NaCl) and Potassium Chloride (KCl) solutions which can be made, preferably in a laboratory. The tables are derived from the standards laid down in 'International Recommendation No. 56 of the Organisation Internationale de Métrologie Legale'.

Table 6. KCl values at 25 °C (OIML)

Weigth %	molal (m)	mg of KCl / kg of solution	Conductivity
0.3	0.001	74.66	0.1469 mS/cm
0.5	0.002	149.32	0.2916 mS/cm
1	0.005	373.29	0.7182 mS/cm
3	0.01	745.263	1.4083 mS/cm
5	0.1	7419.13	12.852 mS/cm
10	1.0	71135.2	111.31 mS/cm

Table 7. NaCl values at 25 °C (IEC 746-1)

Weigth %	mg/kg	Conductivity
0.001	10	21.4 µS/cm
0.003	30	64.0 µS/cm
0.005	50	106 µS/cm
0.01	100	210 µS/cm
0.03	300	617 µS/cm
0.05	500	1.03 mS/cm
0.1	1000	1.99 mS/cm
0.3	3000	5.69 mS/cm
0.5	5000	9.48 mS/cm
1	10000	17.6 mS/cm
3	30000	48.6 mS/cm
5	50000	81.0 mS/cm
10	100000	40 mS/cm

5.2. Periodic maintenance of the sensor

In general conductivity sensors do not need much periodic maintenance. In case the sensor has become fouled, an insulating layer may be formed on the surface of the electrodes, and consequently giving a measuring error. Cleaning the sensor will solve this problem. Effective cleaning methods are given below:

1. Normal applications: hot water with some commercially available washing-up liquid.
2. Lime, hydroxides or similar applications: 5 % solution of hydrochloride acid.
3. Organic (e.g. oils, fats) applications: alcohol or iso-propanol.
4. Algae, bacteria or fungus: solution of commercially available bleach (hypochlorite).

Note: Read the instructions on the package of the cleaning agents for safe use.

6. CHEMICAL COMPATABILITY CHART

Chemical Compatibility Chart

		Conc.%	Temp. °C	Material: Viton 20	Viton 60	Viton 100	Kalrez 20	Kalrez 60	Kalrez 100	EPDM 20	EPDM 60	EPDM 100	Silicon Rubber 20	Silicon Rubber 60	Silicon Rubber 100	Ti 20	Ti 60	Ti 100	SS 316(l) 20	SS 316(l) 60	SS 316(l) 100
Inorganic acid	Sulfiric acid	10		O	O	O	O	O	O	O	O	O	O	O	O	-	-	-	X	X	X
		50		O	O	O	O	O	O	O	X	-	-	-	-	-	-	-	X	X	X
		95		O	O	O	O	O	O	X	-	-	-	-	-	-	-	-	X	X	X
		fuming		O	O	O	O	O	O	-	-	-	-	-	-	-	-	-	-	-	-
	Hydrochloric acid	10		O	O	O	O	O	X	O	O	O	X	-	-	-	-	-	-	-	-
		sat.		O	O	O	O	O	X	X	X	X	X	-	-	-	-	-	-	-	-
	Nitric acid	25		O	O	X	O	O	O	O	X	-	O	O	X	O	O	O	X	X	X
		50		-	-	-	O	O	O	-	-	-	X	-	-	O	O	O	X	X	X
		95		-	-	-	O	O	X	-	-	-	-	-	-	O	O	O	O	O	O
		fuming		-	-	-	O	O	X	-	-	-	-	-	-				O	O	O
	Phosphoric acid	25		O	O	O	O	O	O	O	O	O	O	O	X	X	X	-	-	-	-
		50		O	O	O	O	O	O	O	O	O	O	O	X	X	-	-	X	X	X
		95		X	X	-	O	O	O	O	O	O	O	X	X	X	-	-	O	O	O
	Hydrofluoric acid	40		O	O	O	O	O	X	-	-	-	-	-	-	-	-	-	-	-	-
		75		O	O	X	O	O	X	-	-	-	-	-	-	-	-	-	-	-	-
Organic acid	Acetic acid	10		-	-	-	O	O	O	O	O	O	O	O	O	O	O	O	O	O	X
		glacial		-	-	-	O	O	O	X	X	X	O	O	O	O	O	O	O	O	X
	Formic acid	80		-	-	-	O	O	X	O	O	X	O	O	O	X	X	-	X	X	X
	Citric acid	50		O	O	O	O	O	O	O	O	O	O	O	O	X	X	X	O	O	O
Alkali	Calcium hydroxide	sat.		O	O	O	O	O	O	O	O	O	O	O	O	O	O	O	O	O	O
	Potassium hydroxide	50		O	O	O	O	O	O	O	X	-	O	O	O	O	X	-	O	O	O
	Sodium hydroxide	40		X	X	X	O	O	O	O	X	-	O	O	O	X	X	-	O	O	O
	Ammonia in water	30		X	X	X	O	O	O	O	O	O	O	O	O	X	X	-	O	O	O
Acid salt	Ammonium chloride	sat.		O	O	O	O	O	O	O	O	O	O	O	O	O	O	O	X	X	X
	Zinc chloride	50		O	O	O	O	O	O	O	O	O	O	O	O	O	O	O	X	X	X
	Iron(III) chloride	50		O	O	O	O	O	O	O			O	O	O				-	-	-
	Sodium sulfite	sat.		-	-	-	O	O	O	O	O	O	O	O	O	O	O	O	O	O	O
Basic salt	Sodium carbonate	sat.		O	O	O	O	O	O	O	O	O	O	O	O	O	O	O	O	O	O
	Potassium chloride	sat.		O	O	O	O	O	O	O	O	O	O	O	O	O	O	X	X	X	X
	Sodium sulfate	sat.		O	O	O	O	O	O	O	O	O	O	O	O	O	O	O	O	O	O
	Calcium chloride	sat.		O	O	O	O	O	O	O	O	O	O	O	O	O	O	O	X	X	X
Neutral salt	Sodium chloride	sat.		O	O	O	O	O	O	O	O	O	O	O	O	O	O	O	X	X	X
	Sodium nitrate	50		O	O	O	O	O	O	O	O	O	O	O	O	O	O	O	X	X	X
	Aluminium chloride	sat.		O	O	O	O	O	O	O	O	O	O	O	O	O	O	X	-	-	-
	Hydrogen peroxide	30		O	O	O	O	O	O	O	O	X	X	X	X	O	O	O	O	O	O
Oxidizing agent	Sodium Hypochloride	50		O	O	X	O	O	O	O	O	O	O	O	O	X	-	-	X	X	X
	Potassium dichromate	sat.		O	O	O	O	O	O	O	O	O	O	O	O	O	O	O	O	O	O
	Chlorinated lime						X	-	-				O	O	O				X	X	X
	Ethanol	80		X	-	-	O	O	O	O	O	O	O	O	O	O	O	O	O	O	O
Organic solvent	Cyclohexane			O	O	O	O	O	O	-	-	-	-	-	-	O	O	O	O	O	O
	Toluene			-	-	-	O	O	O	-	-	-	-	-	-	O	O	O	O	O	O
	Trichloroethane			X	X	X	X	-	-	-	-	-	-	-	-	O	O	O	O	O	X
	Water			O	O	O	O	O	X	O	O	O	O	O	O	O	O	O	O	O	O

O = can be used; X = shortens useful life; - = cannot be used; Blank = no data available

Note: Information in this list is based on our general experience and literature data and given in good faith. However Yokogawa is unable to accept responsibility for claims related to this information.

Chemical Compatibility Chart

		Conc.%	Temp. °C	PTFE (teflon)			PEEK			PVDF (Kynar)			PP		Epoxy			Glass		
				20	60	100	20	60	100	20	60	100	20	60	20	60	100	20	60	100
Inorganic acid	Sulfiric acid	10		O	O	O	O	O	O	O	O	O	O	O	O	X	X	O	O	O
		50		O	O	O	O	O	O	O	O	O	O	O	X	X	X	O	O	O
		95		O	O	O	-	-	-	O	X	-	X	-	-	-	-	O	O	O
		fuming		O	O	O	-	-	-	-	-	-	-	-	-	-	-	O	O	O
	Hydrochloric acid	10		O	O	O	O	O	X	O	O	O	O	O	O	X	-	O	O	O
		sat.		O	O	O	O	O	X	O	O	O	O	O	O	X	-	O	O	O
	Nitric acid	25		O	O	O	O	O	O	O	O	X	O	O	O	X	-	O	O	O
		50		O	O	O	X	X	X	O	O	X	X	-	X	-	-	O	O	O
		95		O	O	O	-	-	-	O	X	-	-	-	-	-	-	O	O	O
		fuming		O	O	O	-	-	-	-	-	-	-	-	-	-	-	O	O	O
	Phosphoric acid	25		O	O	O	O	O	O	O	O	O	O	O	O	O	X	O	O	O
		50		O	O	O	O	O	O	O	O	O	O	O	O	O	X	O	O	O
		95		O	O	O	O	O	O	O	O	O	O	O	O	O	X	O	O	O
	Hydrofluoric acid	40		O	O	O	-	-	-	O	O	O	O	O	X	X	-	X	X	X
		75		O	O	O	-	-	-	O	O	O	O	O	X	X	-	-	-	-
Organic acid	Acetic acid	10		O	O	O	O	O	O	O	O	O	O	O	O	O	X	O	O	O
		glacial		O	O	O	O	O	X	O	X	-	O	X	X	-	-	O	O	O
	Formic acid	80		O	O	O	X	X	X	O	O	O	O	O	X	-	-	O	O	O
	Citric acid	50		O	O	O	O	O	O	O	O	O	O	O	X	-	-	O	O	O
Alkali	Calcium hydroxide	sat.		O	O	O	O	O	O	O	O	O	O	O	O	O	O	O	O	O
	Potassium hydroxide	50		O	O	O	O	O	O	O	O	X	O	O	O	O	X	O	O	X
	Sodium hydroxide	40		O	O	O	O	O	O	O	O	X	O	O	O	O	X	O	O	X
	Ammonia in water	30		O	O	O	O	O	O	O	O	O	O	O	O	O	O	O	O	X
Acid salt	Ammonium chloride	sat.		O	O	O	O	O	O	O	O	O	O	O	O	X	X	O	O	O
	Zinc chloride	50		O	O	O	O	O	O	O	O	O	O	O	O	O	X	O	O	O
	Iron(III) chloride	50		O	O	O	O	O	O	O	O	O	O	O	O	O	X	O	O	O
	Sodium sulfite	sat.		O	O	O	O	O	O	O	O	O	O	O	O	O	O	O	O	O
Basic salt	Sodium carbonate	sat.		O	O	O	O	O	O	O	O	O	O	O	O	O	X	O	O	O
	Potassium chloride	sat.		O	O	O	O	O	O	O	O	O	O	O	O	O	O	O	O	O
	Sodium sulfate	sat.		O	O	O	O	O	O	O	O	O	O	O	O	O	O	O	O	O
	Calcium chloride	sat.		O	O	O	O	O	O	O	O	O	O	O	O	O	O	O	O	O
Neutral salt	Sodium chloride	sat.		O	O	O	O	O	O	O	O	O	O	O	O	O	O	O	O	O
	Sodium nitrate	50		O	O	O	O	O	O	O	O	O	O	O	O	O	O	O	O	O
	Aluminium chloride	sat.		O	O	O	O	O	O	O	O	O	O	O	O	O	O	O	O	O
	Hydrogen peroxide	30		O	O	O	O	O	O	O	O	O	O	O	O	O	X	O	O	O
Oxidizing agent	Sodium Hypochloride	50		O	O	O	O	O	O	O	O	O	X	X	O	X	X	O	O	O
	Potassium dichromate	sat.		O	O	O	O	O	O	O	X	-	O	O	O	X	X	O	O	O
	Chlorinated lime			O	O	O	X	X	X	O	O	O	-	-	O	X	X	O	O	O
	Ethanol	80		O	O	O	O	O	O	O	O	X	O	O	O	O	X	O	O	O
Organic solvent	Cyclohexane			O	O	O	O	O	O	O	O	X	-	-	O	O	X	O	O	O
	Toluene			O	O	O	O	O	O	O	O	O	X	-	O	O	X	O	O	O
	Trichloroethane			O	O	O	O	O	O	X	X	X	-	-	X	-	-	O	O	O
	Water			O	O	X	O	O	O	O	O	O	O	O	O	O	X	O	O	O

O = can be used; X = shortens useful life; - = cannot be used; Blank = no data available

Note: Information in this list is based on our general experience and literature data and given in good faith.
However Yokogawa is unable to accept responsibility for claims related to this information.

YOKOGAWA ELECTRIC CORPORATION
World Headquarters
9-32, Nakacho 2-chome, Musashino-shi
Tokyo 180-8750
Japan
www.yokogawa.com

YOKOGAWA CORPORATION OF AMERICA
2 Dart Road
Newnan GA 30265
USA
www.yokogawa.com/us

YOKOGAWA EUROPE BV
Euroweg 2
3825 HD AMERSFOORT
The Netherlands
www.yokogawa.com/eu

YOKOGAWA ELECTRIC ASIA Pte. LTD.
5 Bedok South Road
Singapore 469270
Singapore
www.yokogawa.com/sg

YOKOGAWA CHINA CO. LTD.
3F Tower D Cartelo Crocodile Building
No.568 West Tianshan Road Changing District
Shanghai, China
www.yokogawa.com/cn

YOKOGAWA MIDDLE EAST B.S.C.(c)
P.O. Box 10070, Manama
Building 577, Road 2516, Busaiteen 225
Muharraq, Bahrain
www.yokogawa.com/bh

Yokogawa has an extensive sales and distribution network.
Please refer to the European website (www.yokogawa.com/eu) to contact your nearest representative.

YOKOGAWA

IM 12D7J1-11E-E
Subject to change without notice
Printed in The Netherlands, 08-1411 (A) I
Copyright ©