Drawings

SD 01C33C10-09EN

OpreX™ Pressure Transmitter
EJX110S Differential Pressure Transmitter
Universal Flange
Capsule Range Code: M, H, V

Unit: mm (approx. inch)

● Universal Flange (The drawing below is for Installation code U.)

• Capsule Range Code: M, H, V

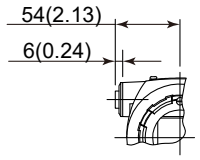

Electrical connection
for code 5, 9, A, and D.

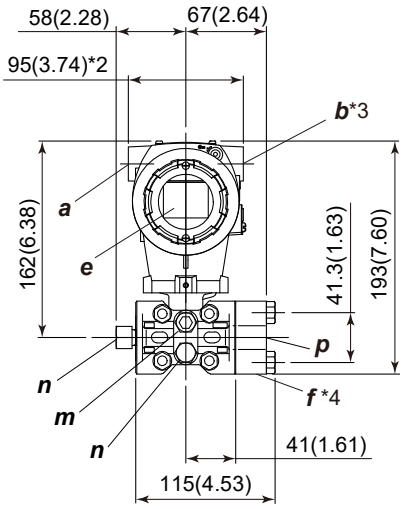

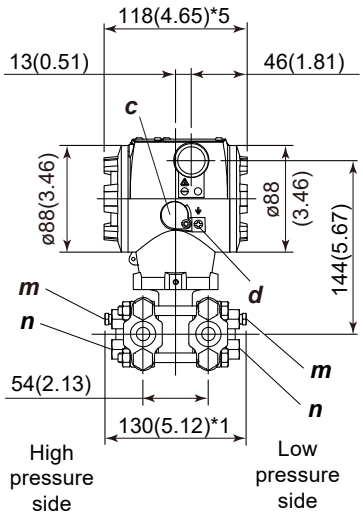

a	External indicator Conduit connection (optional)	***d***	Ground terminal	***m***	Vent plug
b	Conduit connection	***e***	Display (optional)	***n***	Drain plug
c	Zero adjustment	***f***	Process connector (optional)	***p***	Process connection

*1: In case of optional codes /K01, /K05, /K41 and /K45 specified, add 30 mm (1.18 inch).
*2: In case of electrical connection code 7 or C is specified, a blind plug is protruded by up to 8 mm (0.31 inch) from conduit connection.
*3: In case of optional code /PP specified, a blind plug is attached to conduit connection on both sides.
*4: In case of optional code /BS specified, a bug screen is installed to the process connection port of the low side cover flange, and no process connector is attached on the low pressure side.
*5: In case of Display and interface code N specified, it is 113 mm (4.45 inch).

● Terminal Configuration

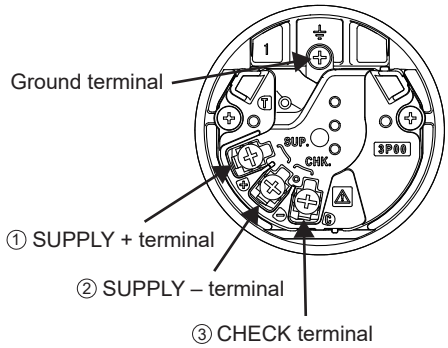

● Terminal Wiring

SUPPLY	+ ① / – ②	Power supply and output terminals
CHECK	+ ③ / – ②	External indicator (ammeter) terminals *1
⏚		Ground terminal

*1: When using an extarnal indicator or check meter, the internal resistance must be 10Ω or less. Not available for PROFINET communication type.

All Rights Reserved. Copyright © 2026, Yokogawa Electric Corporation.
Subject to change without notice. Printed in Japan.