Drawings

OpreX™ Pressure Transmitter
EJX110S Differential Pressure Transmitter
with Process Connection Code W

SD 01C33C10-14EN

Unit: mm (approx. inch)

● With Process connection code W*1

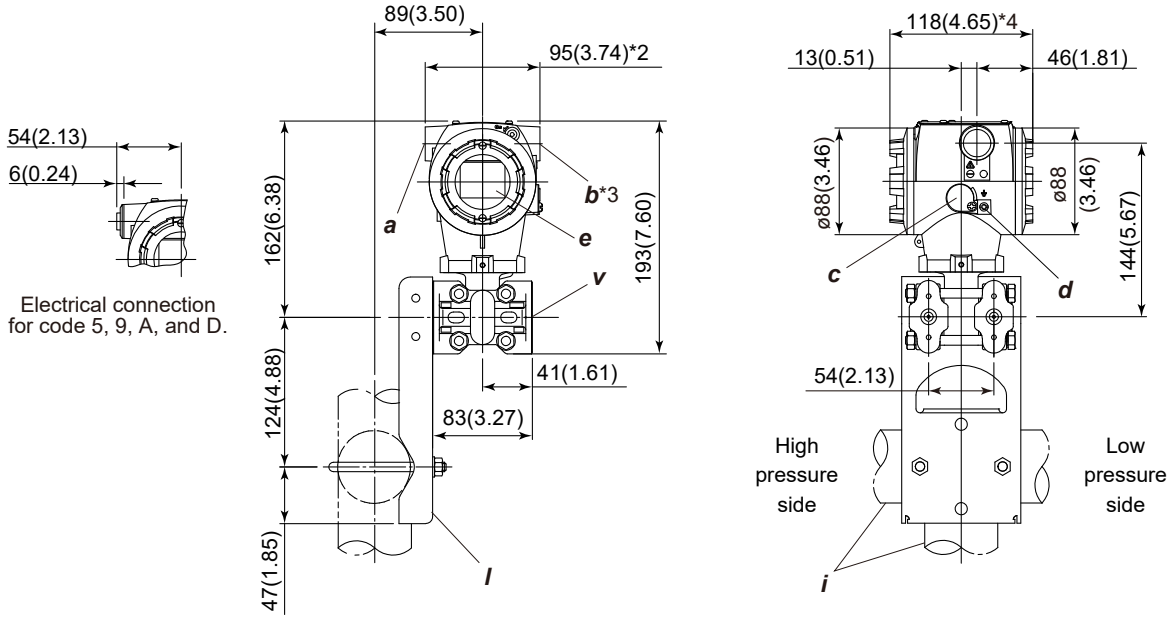

a	External indicator Conduit connection (optional)	***d***	Ground terminal	***l***	Mounting bracket (Flat-type, optional)
b	Conduit connection	***e***	Display (optional)	***v***	Threads for diaphragm seal
c	Zero adjustment	***i***	2-inch pipe (O.D. 60.5 mm)		

*1: Process connection code W is for combination with the third party's diaphragm seal.
*2: In case of electrical connection code 7 or C is specified, a blind plug is protruded by up to 8 mm (0.31 inch) from conduit connection.
*3: In case of optional code /PP specified, a blind plug is attached to conduit connection on both sides.
*4: In case of Display and interface code N specified, it is 113 mm (4.45 inch).

● Terminal Configuration

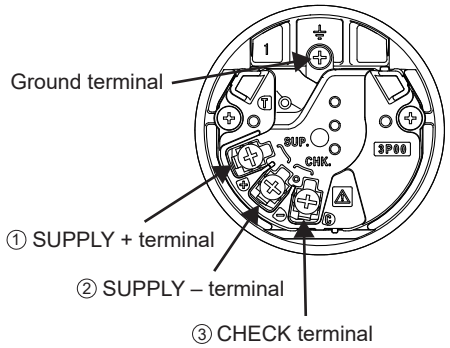

● Terminal Wiring

SUPPLY	+ ① / – ②	Power supply and output terminals
CHECK	+ ③ / – ②	External indicator (ammeter) terminals *1
⏚ Ground terminal		

*1: When using an extarnal indicator or check meter, the internal resistance must be 10Ω or less. Not available for PROFINET communication type.

All Rights Reserved. Copyright © 2026, Yokogawa Electric Corporation.
Subject to change without notice. Printed in Japan.