Drawings

OpreX™ Pressure Transmitter
EJX430S Gauge Pressure Transmitter
Capsule Range Code: C, D

SD 01C33E10-03EN

Unit: mm (approx. inch)

Capsule Range Code: C, D

● Vertical Impulse Piping Type

• Process connector upside (The drawing below is for Installation code 6.)

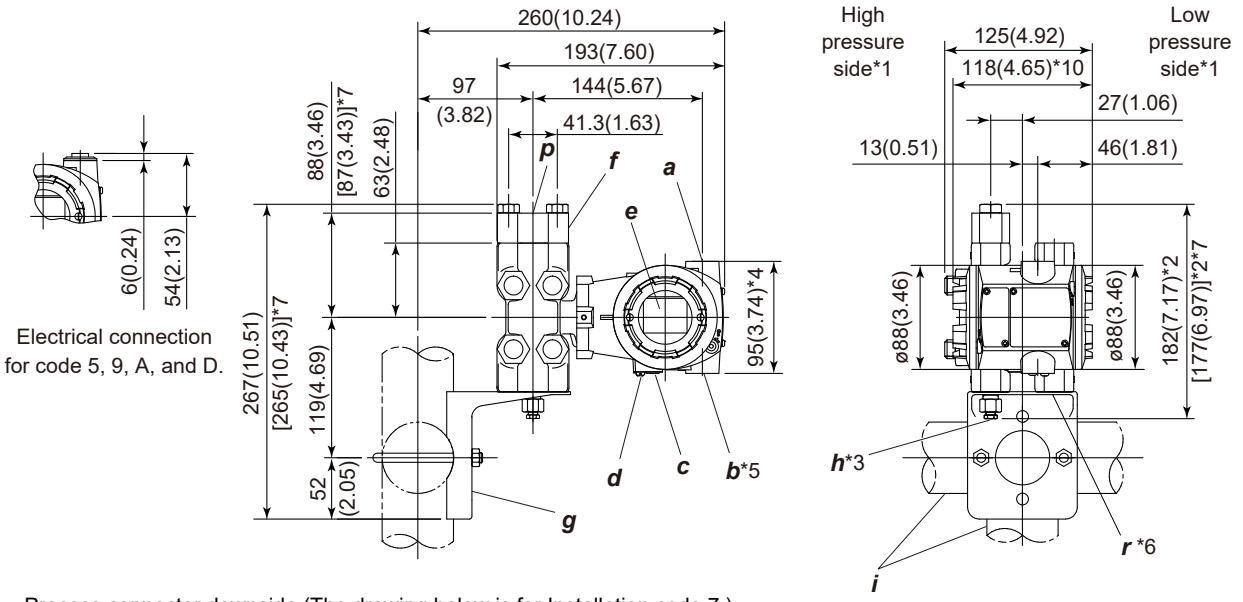

• Process connector downside (The drawing below is for Installation code 7.)

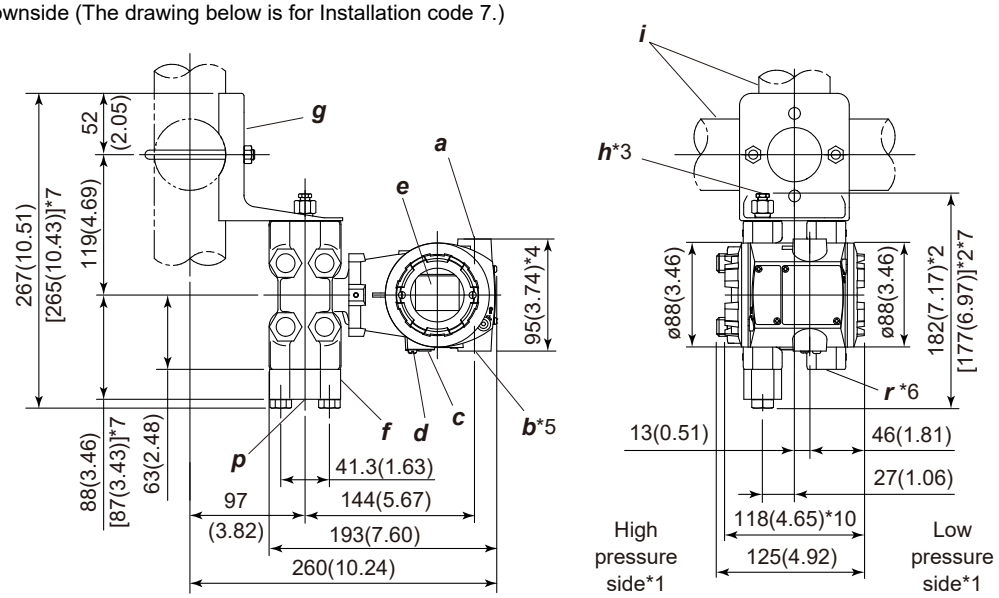

a	External indicator Conduit connection (optional)	***e***	Display (optional)	***i***	2-inch pipe (O.D. 60.5 mm)
b	Conduit connection	***f***	Process connector (optional)	***p***	Process connection
c	Zero adjustment	***g***	Mounting bracket (L-type, optional)	***r***	Open to atmosphere (ø9)
d	Ground terminal	***h***	Vent/Drain plugs		

All Rights Reserved. Copyright © 2026, Yokogawa Electric Corporation.
Subject to change without notice. Printed in Japan.

Unit: mm (approx. inch)

● Horizontal Impulse Piping Type (The drawing below is for Installation code 9.)

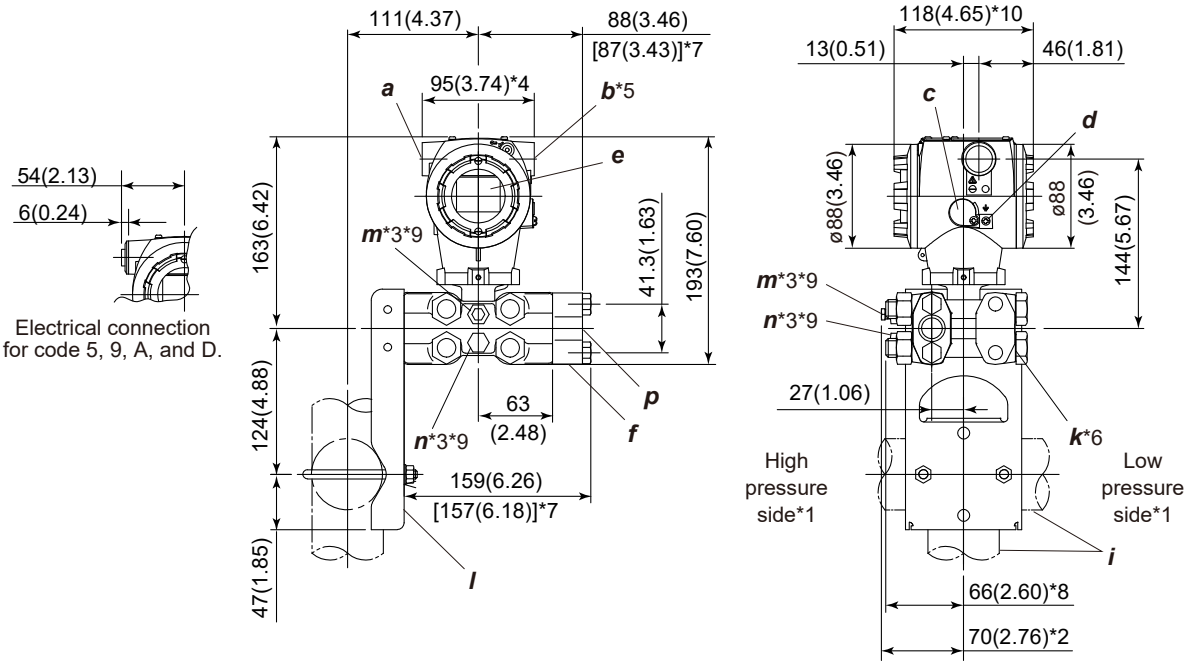

a	External indicator Conduit connection (optional)	***e***	Display (optional)	***l***	Mounting bracket (Flat-type, optional)
b	Conduit connection	***f***	Process connector (optional)	***m***	Vent plug
c	Zero adjustment	***i***	2-inch pipe (O.D. 60.5 mm)	***n***	Drain plug
d	Ground terminal	***k***	Open to atmosphere (ø5)	***p***	Process connection

*1: In case of Installation code 2, 3, or 8 is specified, high and low pressure side on the above figure are reversed. (i.e. High pressure side is on the right side.)
*2: In case of optional codes /K01, /K05, /K41 and /K45 specified, add 15 mm (0.59 inch).
*3: In case of optional code /UN specified, plugs are not attached.
*4: In case of electrical connection code 7 or C is specified, a blind plug is protruded by up to 8 mm (0.31 inch) from conduit connection.
*5: In case of optional code /PP specified, a blind plug is attached to conduit connection on both sides.
*6: In case of optional code /BS specified, a bug screen is installed to the hole of open to atmosphere of the low side cover flange.
*7: "[ ]" means for Capsule range code "D".
*8: Dimension for option code /UN.
*9: In case of optional code /GS specified, plugs are not attached.
*10: In case of Display and interface code N specified, it is 113 mm (4.45 inch).

● Terminal Configuration

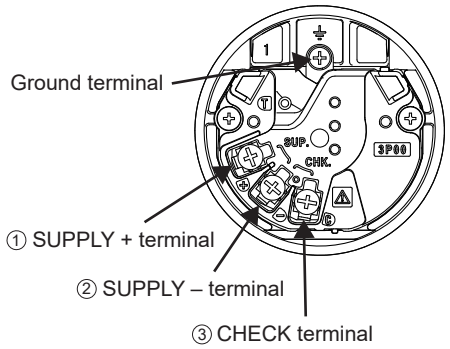

● Terminal Wiring

SUPPLY	+ ① / – ②	Power supply and output terminals
CHECK	+ ③ / – ②	External indicator (ammeter) terminals *1
⏚ Ground terminal		

*1: When using an extarnal indicator or check meter, the internal resistance must be 10Ω or less. Not available for PROFINET communication type.

All Rights Reserved. Copyright © 2026, Yokogawa Electric Corporation.