Drawings

OpreX™ Pressure Transmitter
EJX430S Gauge Pressure Transmitter
Bottom Process Connection

SD 01C33E10-08EN

Unit: mm (approx. inch)

● Bottom Process Connection (The drawing below is for Installation code B.)

• Capsule Range Code: H, A, B

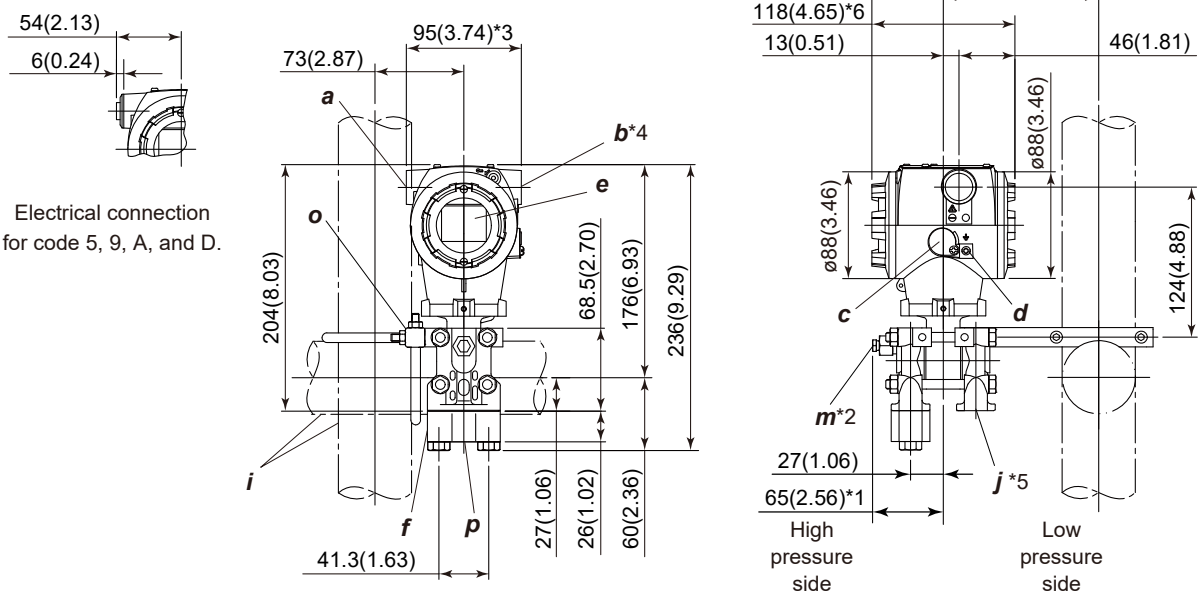

a	External indicator Conduit connection (optional)	***e***	Display (optional)	***m***	Vent plug
b	Conduit connection	***f***	Process connector (optional)	***o***	Mounting bracket (optional)
c	Zero adjustment	***i***	2-inch pipe (O.D. 60.5 mm)	***p***	Process connection
d	Ground terminal	***j***	Open to atmosphere (ø10)		

*1: In case of optional codes /K01, /K05, /K41 and /K45 specified, add 15 mm (0.59 inch).
*2: In case of optional code /UN specified, plugs are not attached.
*3: In case of electrical connection code 7 or C is specified, a blind plug is protruded by up to 8 mm (0.31 inch) from conduit connection.
*4: In case of optional code /PP specified, a blind plug is attached to conduit connection on both sides.
*5: In case of optional code /BS specified, a bug screen is installed to the hole of open to atmosphere of the low side cover flange.
*6: In case of Display and interface code N specified, it is 113 mm (4.45 inch).

● Terminal Configuration

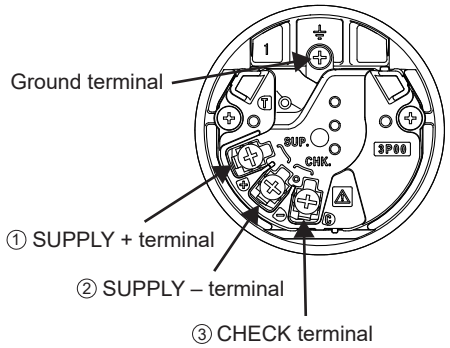

● Terminal Wiring

SUPPLY	+ ① / – ②	Power supply and output terminals
CHECK	+ ③ / – ②	External indicator (ammeter) terminals *1
⏚ Ground terminal		

*1: When using an extarnal indicator or check meter, the internal resistance must be 10Ω or less. Not available for PROFINET communication type.

All Rights Reserved. Copyright © 2026, Yokogawa Electric Corporation.
Subject to change without notice. Printed in Japan.