Drawings

SD 01C33E10-10EN

OpreX™ Pressure Transmitter
EJX430S Gauge Pressure Transmitter
Universal Flange
Capsule Range Code: C, D

Unit: mm (approx. inch)

● Universal Flange (The drawing below is for Installation code U.)

• Capsule Range Code: C, D

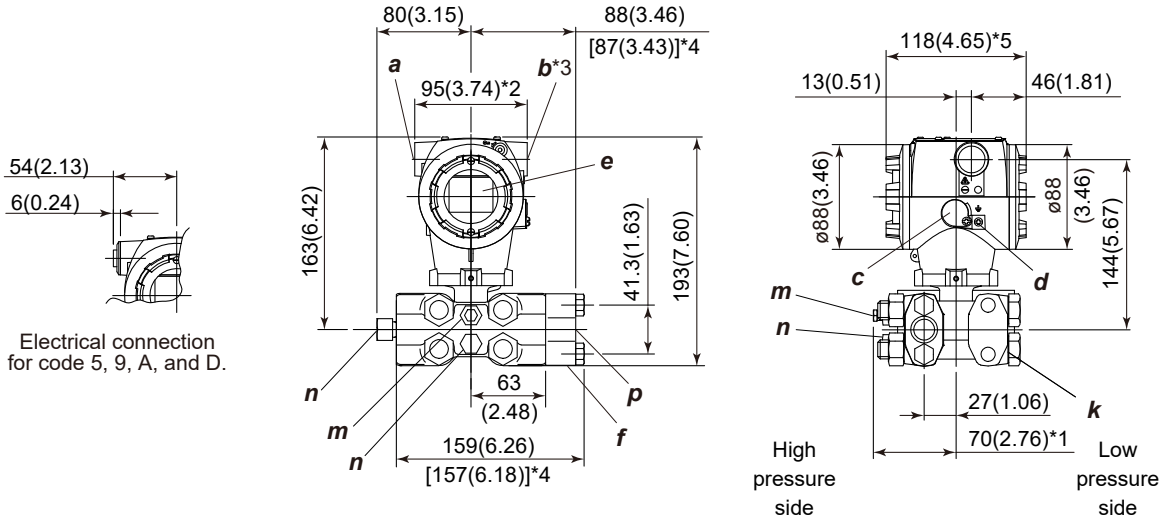

a	External indicator Conduit connection (optional)	***e***	Display (optional)	***n***	Drain plug
b	Conduit connection	***f***	Process connector (optional)	***p***	Process connection
c	Zero adjustment	***k***	Open to atmosphere (ø5)		
d	Ground terminal	***m***	Vent plug		

*1: In case of optional codes /K01, /K05, /K41 and /K45 specified, add 15 mm (0.59 inch).
*2: In case of electrical connection code 7 or C is specified, a blind plug is protruded by up to 8 mm (0.31 inch) from conduit connection.
*3: In case of optional code /PP specified, a blind plug is attached to conduit connection on both sides.
*4: "[ ]" means for Capsule Range Code "D".
*5: In case of Display and interface code N specified, it is 113 mm (4.45 inch).

● Terminal Configuration

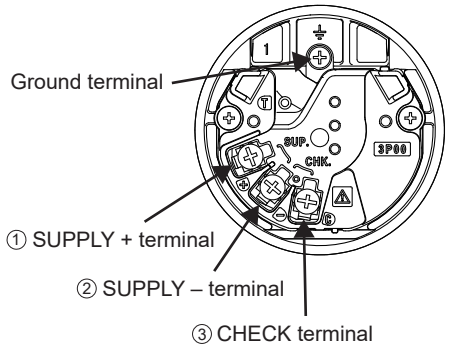

● Terminal Wiring

SUPPLY	+ ① / – ②	Power supply and output terminals
CHECK	+ ③ / – ②	External indicator (ammeter) terminals *1
⏚ Ground terminal		

*1: When using an extarnal indicator or check meter, the internal resistance must be 10Ω or less. Not available for PROFINET communication type.

All Rights Reserved. Copyright © 2026, Yokogawa Electric Corporation.
Subject to change without notice. Printed in Japan.