# Drawings

**OpreX**™ Pressure Transmitter
EJX430S Gauge Pressure Transmitter
with Process Connection Code W

SD 01C33E10-11EN

Unit: mm (approx. inch)

● With Process connection code W*1

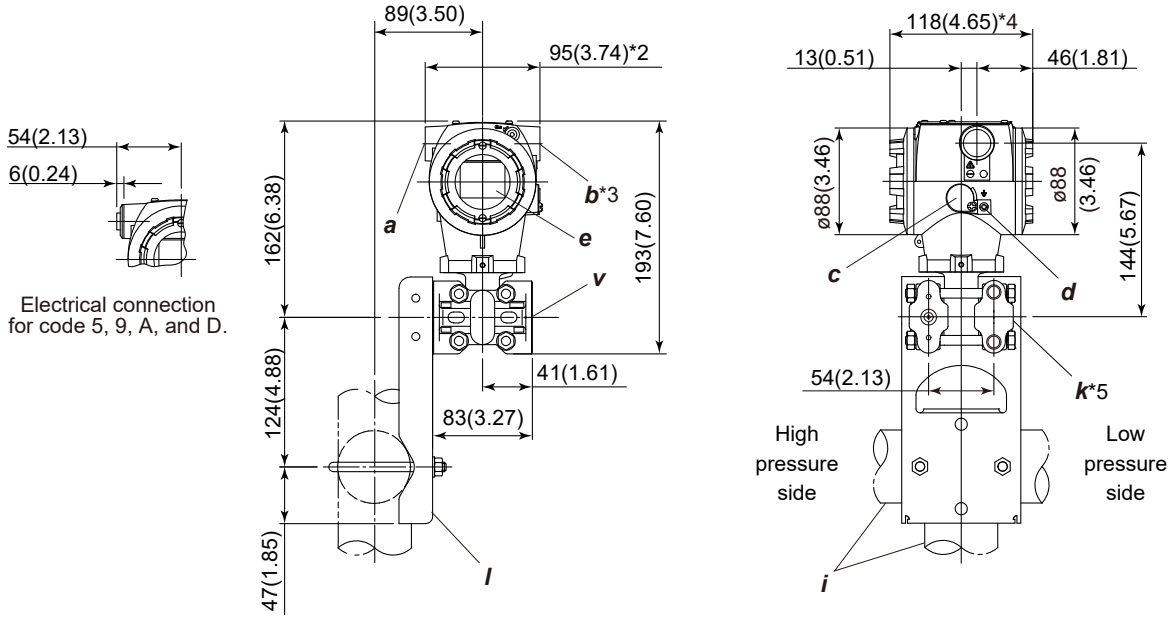


| | | | | | |
|---|---|---|---|---|---|
| ***a*** | External indicator Conduit connection (optional) | ***d*** | Ground terminal | ***k*** | Open to atmosphere (ø5) |
| ***b*** | Conduit connection | ***e*** | Display (optional) | ***l*** | Mounting bracket (Flat-type, optional) |
| ***c*** | Zero adjustment | ***i*** | 2-inch pipe (O.D. 60.5 mm) | ***v*** | Threads for diaphragm seal |

*1: Process connection code W is for combination with the third party's diaphragm seal.
*2: In case of electrical connection code 7 or C is specified, a blind plug is protruded by up to 8 mm (0.31 inch) from conduit connection.
*3: In case of optional code /PP specified, a blind plug is attached to conduit connection on both sides.
*4: In case of Display and interface code N specified, it is 113 mm (4.45 inch).
*5: In case of optional code /BS specified, a bug screen is installed to the hole of open to atmosphere of the low side cover flange.

● Terminal Configuration

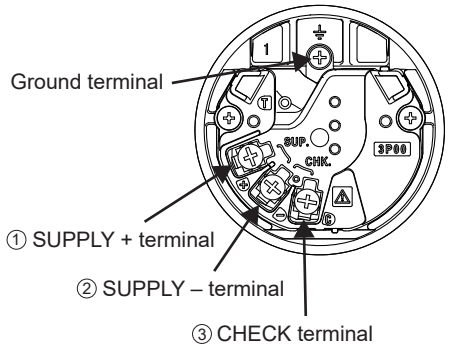


● Terminal Wiring

| | | |
|---|---|---|
| SUPPLY | + ① / – ② | Power supply and output terminals |
| CHECK | + ③ / – ② | External indicator (ammeter) terminals *1 |
| ⏚ Ground terminal | | |

*1: When using an extarnal indicator or check meter, the internal resistance must be 10Ω or less. Not available for PROFINET communication type.



All Rights Reserved. Copyright © 2026, Yokogawa Electric Corporation.
Subject to change without notice. Printed in Japan.