Drawings

OpreX™ Pressure Transmitter
EJX310S and EJX430S
with Option Code /N2 and /N3

SD 01C33E20-13EN

Unit: mm (approx. inch)

● EJX310S
EJX430S (Wetted Parts Material Code: S, F, G and Capsule Range Code: H, A, B)

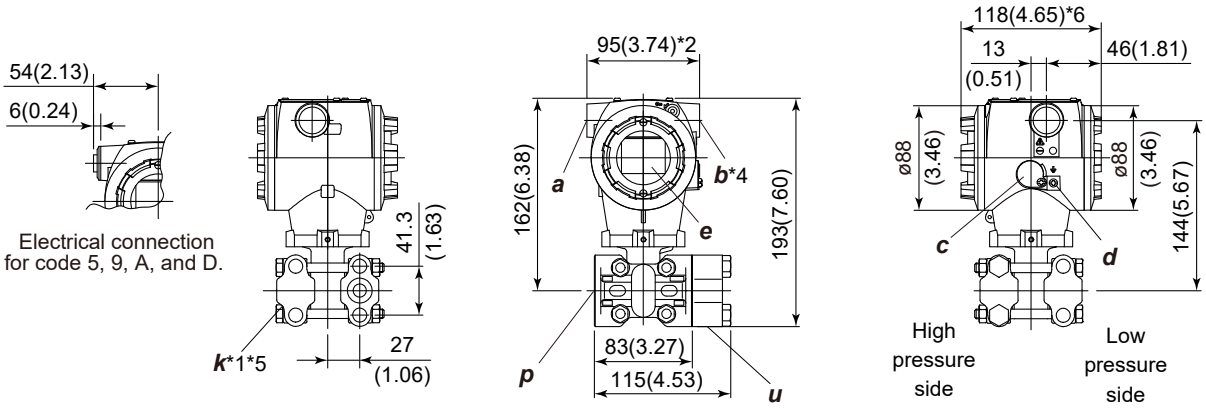

● EJX430S (Wetted Parts Material Code: H, M, T and Capsule Range Code: H, A, B)

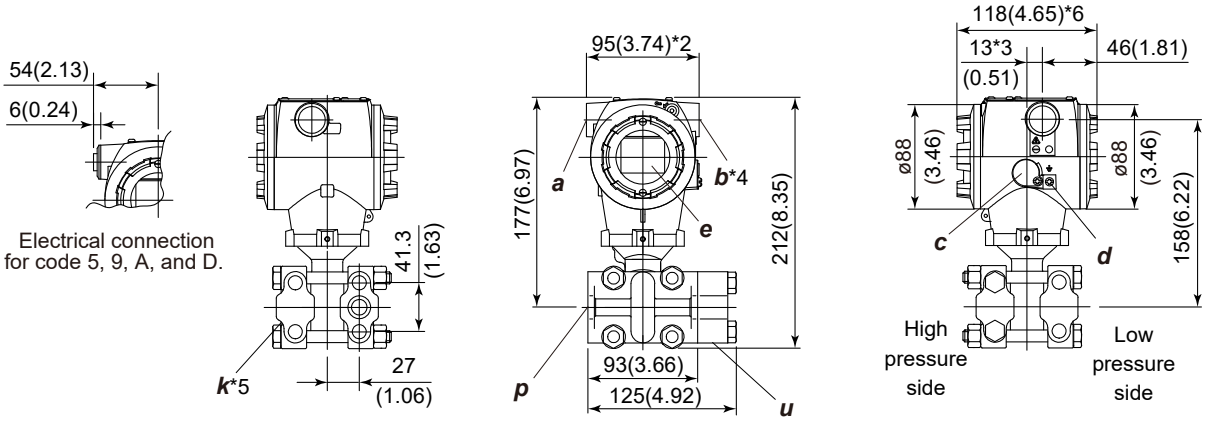

a	External indicator Conduit connection (optional)	***e***	Display (optional)
b	Conduit connection	***k***	Open to atmosphere (ø5)
c	Zero adjustment	***p***	Process connection
d	Ground terminal	***u***	Blind kidney flange

All Rights Reserved. Copyright © 2026, Yokogawa Electric Corporation.
Subject to change without notice. Printed in Japan.

Unit: mm (approx. inch)

● EJX430S (Capsule Range Code: C)

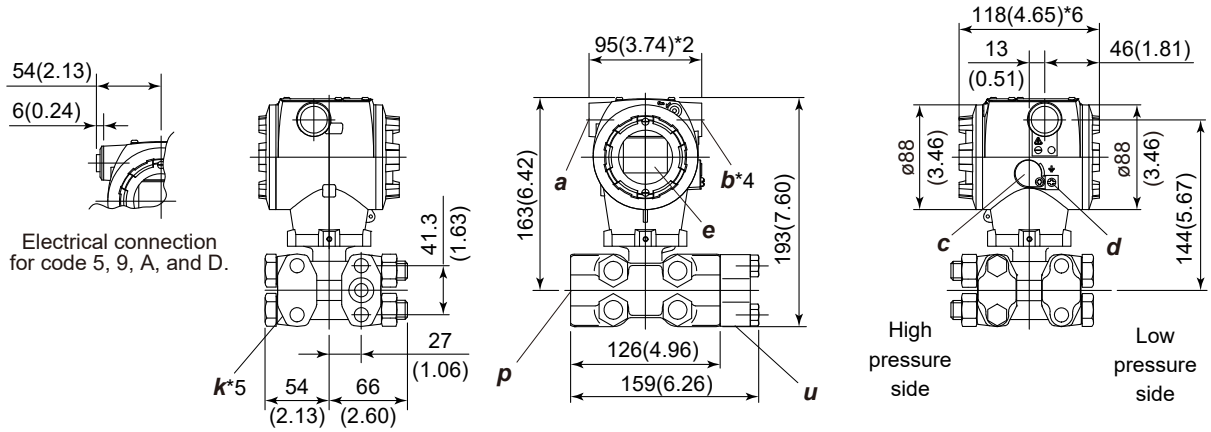

a	External indicator Conduit connection (optional)	***e***	Display (optional)
b	Conduit connection	***k***	Open to atmosphere (ø5)
c	Zero adjustment	***p***	Process connection
d	Ground terminal	***u***	Blind kidney flange

*1: Applicable for EJX430S.
*2: In case of electrical connection code 7 or C is specified, a blind plug is protruded by up to 8 mm (0.31 inch) from conduit connection.
*3: In case of Capsule range code H is specified, it is 10 mm (0.39 inch).
*4: In case of optional code /PP specified, a blind plug is attached to conduit connection on both sides.
*5: In case of optional code /BS specified, the hole open to atmosphere on the cover flange of low pressure side is threaded and a bug screen is attached in it.
*6: In case of Display and interface code N specified, it is 113 mm (4.45 inch).

● Terminal Configuration

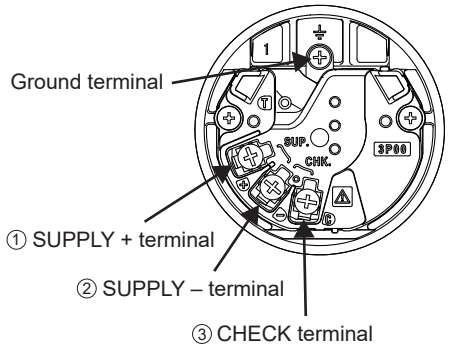

● Terminal Wiring

SUPPLY	+ ① / – ②	Power supply and output terminals
CHECK	+ ③ / – ②	External indicator (ammeter) terminals *1
⏚ Ground terminal		

*1: When using an extarnal indicator or check meter, the internal resistance must be 10Ω or less. Not available for PROFINET communication type.

All Rights Reserved. Copyright © 2026, Yokogawa Electric Corporation.