Drawings

SD 01C33F30-02EN

OpreX™ Pressure Transmitter
EJX510S and EJX530S
Absolute and Gauge Pressure Transmitter
Process Connection Code W

Unit: mm (approx. inch)

● Process connections code: W

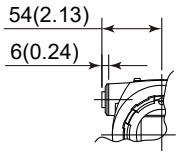

Electrical connection
for code 5, 9, A, and D.

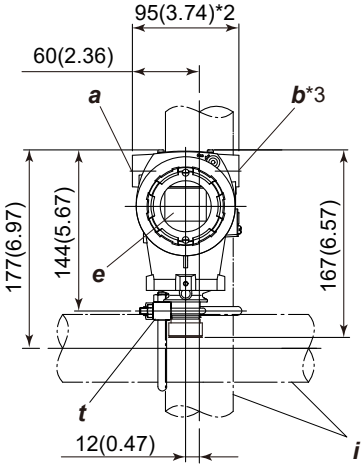

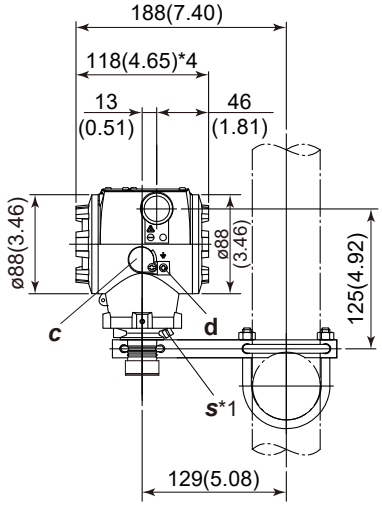

a	External indicator Conduit connection (optional)	***d***	Ground terminal	***s***	Open to atmosphere
b	Conduit connection	***e***	Display (optional)	***t***	Mounting bracket
c	Zero adjustment	***i***	2-inch pipe (O.D. 60.5 mm)		

*1: Only to for EJX530S.
*2: In case of electrical connection code 7 or C is specified, a blind plug is protruded by up to 8 mm (0.31 inch) from conduit connection.
*3: In case of optional code /PP specified, a blind plug is attached to conduit connection on both sides.
*4: In case of Display and interface code N specified, it is 113 mm (4.45 inch).

● Terminal Configuration

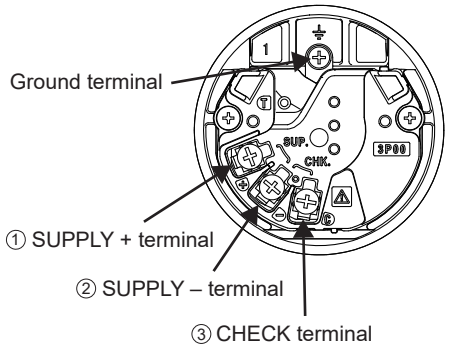

● Terminal Wiring

SUPPLY	+ ① / – ②	Power supply and output terminals
CHECK	+ ③ / – ②	External indicator (ammeter) terminals *1
⏚ Ground terminal		

*1: When using an extarnal indicator or check meter, the internal resistance must be 10Ω or less. Not available for PROFINET communication type.

All Rights Reserved. Copyright © 2026, Yokogawa Electric Corporation.
Subject to change without notice. Printed in Japan.