Drawings

ADMAG TI Series
AXG Magnetic Flowmeter
Flange EN PN16, EN PN40

SD 01E22D02-03EN

Unit: mm (approx. in.)

Size 2.5 to 15 mm (0.1 to 0.5 in.)

AXG002
AXG005
AXG010
AXG015 -□□□□□■□□A

Size Code — Process Connection Code — Lining Code

■=B, D, P

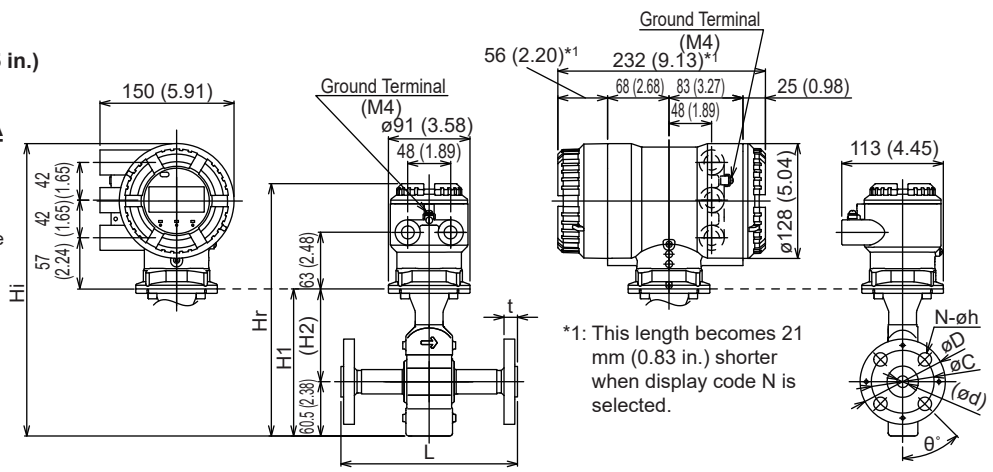

F01.ai

Size 25 to 125 mm (1 to 5 in.)

AXG025
AXG032
AXG040
AXG050
AXG065 -□□□□□■□□A
AXG080
AXG100
AXG125

Size Code — Process Connection Code — Lining Code

■=B, C, P

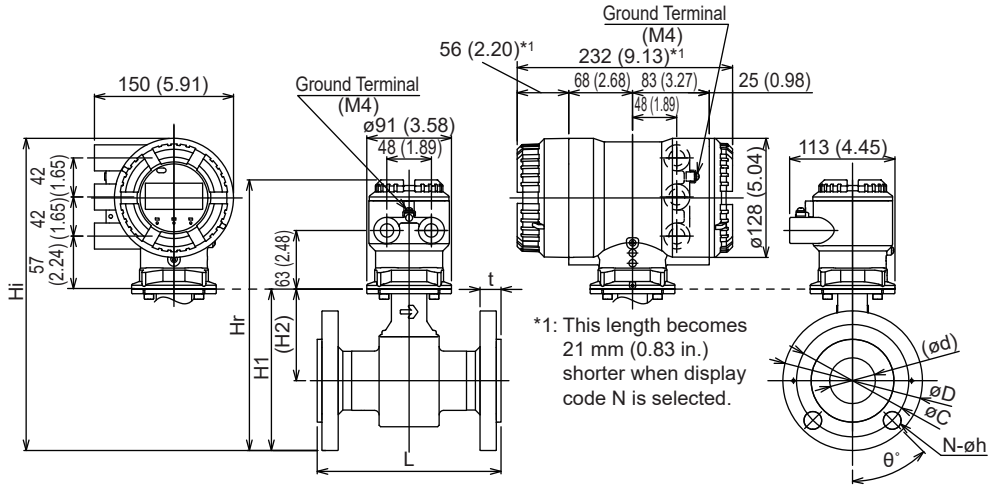

F02.ai

Size 150 to 200 mm (6 to 8 in.)

AXG150
AXG200 -□□□□□■□□A

Size Code — Process Connection Code — Lining Code

■=B, C, P

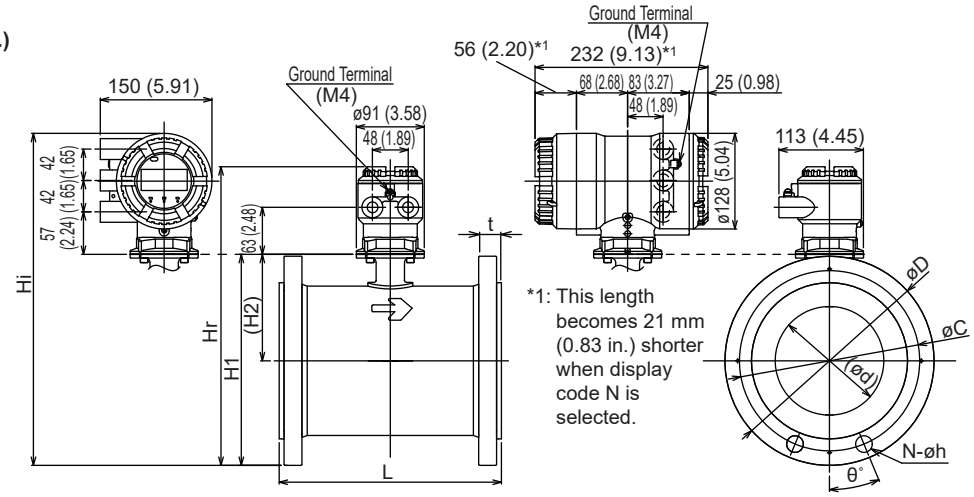

F03.ai

Unless otherwise specified, limit deviations in the drawing are specified as : General limit deviation = ± (Criteria of standard tolerance grade IT18 in JIS B0401-1) / 2

All Rights Reserved. Copyright © 2017, Yokogawa Electric Corporation.
Subject to change without notice. Printed in Japan.

SD 01E22D02-03EN
1st Edition: Apr. 2017 (KP)
7th Edition: Mar. 2022 (KP)

Unit: mm (approx. in.)

Size 250 to 300 mm (10 to 12 in.)

AXG250
AXG300 -□□□□□■□□A

Size Code

Process Connection Code

Lining Code

■=B, C, P

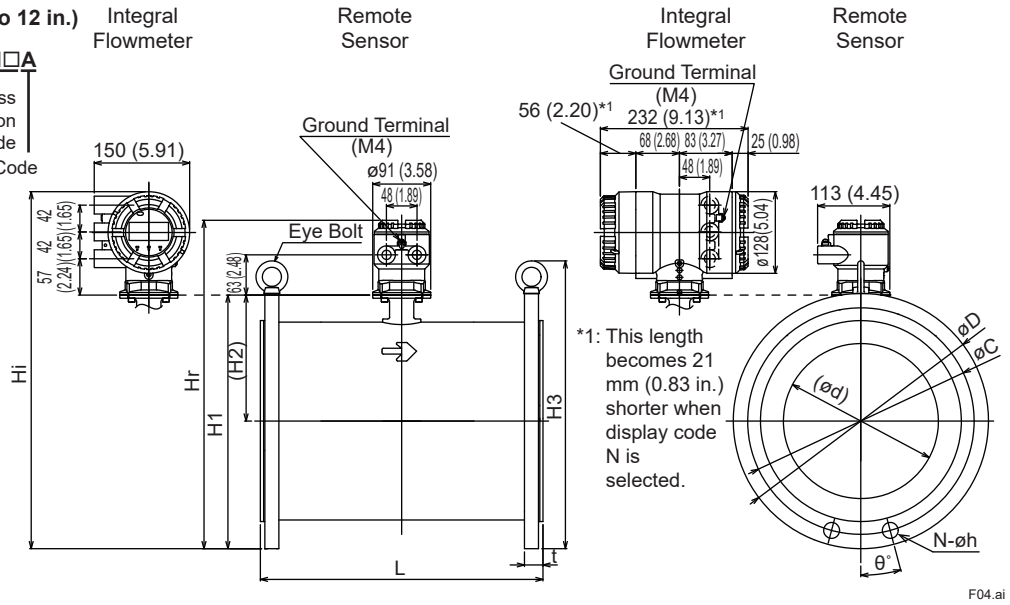

F04.ai

Size 500 mm (20 in.)

AXG500 -□□□□□■□□A

Size Code

Process Connection Code

Lining Code

■=B, C

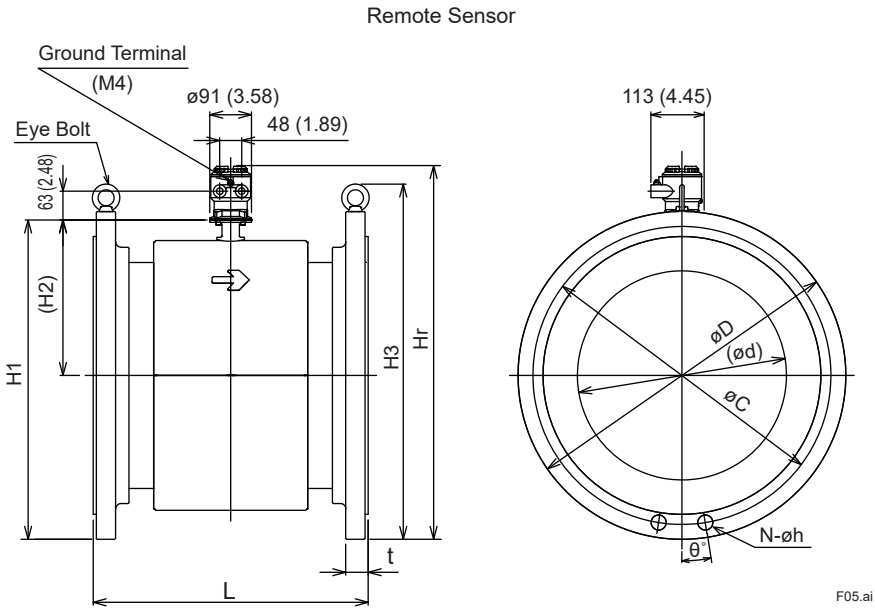

F05.ai

	Direction of Cable Entry			
	Standard (0°)	**+90° rotation**	**+180° rotation**	**-90° rotation**
Integral Flowmeter	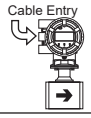	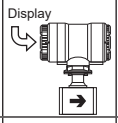	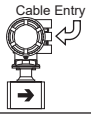	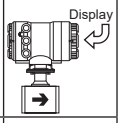
Remote Sensor		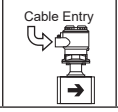		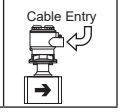

* When optional code RH is selected with its rotational specification, the direction of cable entry is as shown on the left.

All Rights Reserved. Copyright © 2017, Yokogawa Electric Corporation.

Unit: mm (approx. in.)

Model	Process Connection Code		DE4			BE4								BE2								
			-	-	-	-	-	-	-	-	-	-	CE4	CE2								
			-	-	-	PE4					-	PE4		-	PE2		-	PE2				-
	Size Code		002	005	010	002	005	010	015	025	032	040	050	065	080	100	125	150	200	250	300	500
	Size		2.5 (0.1)	5 (0.2)	10 (0.4)	2.5 (0.1)	5 (0.2)	10 (0.4)	15 (0.5)	25 (1)	32 (1.25)	40 (1.5)	50 (2)	65 (2.5)	80 (3)	100 (4)	125 (5)	150 (6)	200 (8)	250 (10)	300 (12)	500 (20)
	Lining Code		A	A	A	A	A	A	A	A	A	A	A	A	A	A	A	A	A	A	A	A
Remote Sensor Integral Flowmeter	Lay Length (*1) (*3)	L	148 (5.83)	148 (5.83)	148 (5.83)	148 (5.83)	148 (5.83)	148 (5.83)	198 (7.80)	198 (7.78)	198 (7.78)	198 (7.78)	198 (7.78)	198 (7.78)	198 (7.78)	248 (9.74)	248 (9.74)	298 (11.71)	348 (13.68)	446 (17.54)	496 (19.51)	600 (23.62)
	Flange Outer Diameter	øD	90 (3.54)	90 (3.54)	90 (3.54)	95 (3.74)	95 (3.74)	95 (3.74)	95 (3.74)	115 (4.53)	140 (5.51)	150 (5.91)	165 (6.50)	185 (7.28)	200 (7.87)	220 (8.66)	250 (9.84)	285 (11.22)	340 (13.39)	405 (15.94)	460 (18.11)	715 (28.15)
	Flange Thickness (incl. lining flare)	t	20.0 (0.79)	20.0 (0.79)	20.0 (0.79)	20.0 (0.79)	20.0 (0.79)	20.0 (0.79)	19.0 (0.75)	22.0 (0.87)	21.0 (0.83)	21.0 (0.83)	23.0 (0.91)	21.0 (0.83)	23.0 (0.91)	23.0 (0.91)	25.0 (0.98)	25.5 (1.00)	27.5 (1.08)	30.0 (1.18)	31.0 (1.22)	49.3 (1.94)
	Lining Inner Diameter	ød	2 (0.09)	5 (0.19)	8 (0.30)	2 (0.09)	5 (0.19)	8 (0.30)	13 (0.51)	24 (0.93)	29 (1.13)	37 (1.44)	49 (1.94)	61 (2.40)	73 (2.87)	97 (3.82)	121 (4.76)	145 (5.72)	194 (7.65)	243 (9.55)	292 (11.51)	459 (18.07)
	Bolt Circle Diameter	øC	60 (2.36)	60 (2.36)	60 (2.36)	65 (2.56)	65 (2.56)	65 (2.56)	65 (2.56)	85 (3.35)	100 (3.94)	110 (4.33)	125 (4.92)	145 (5.71)	160 (6.30)	180 (7.09)	210 (8.27)	240 (9.45)	295 (11.61)	355 (13.98)	410 (16.14)	650 (25.59)
	Bolt Hole Interval	θ°	45	45	45	45	45	45	45	45	45	45	45	22.5	22.5	22.5	22.5	22.5	15	15	15	9
	Bolt Hole Diameter	øh	14 (0.55)	14 (0.55)	14 (0.55)	14 (0.55)	14 (0.55)	14 (0.55)	14 (0.55)	14 (0.55)	18 (0.71)	18 (0.71)	18 (0.71)	18 (0.71)	18 (0.71)	18 (0.71)	18 (0.71)	22 (0.87)	22 (0.87)	26 (1.02)	26 (1.02)	33 (1.30)
	Number of Bolt Holes	N	4	4	4	4	4	4	4	4	4	4	4	8	8	8	8	8	12	12	12	20
	Height	H1	164 (6.46)	164 (6.46)	164 (6.46)	164 (6.46)	164 (6.46)	164 (6.46)	164 (6.46)	138 (5.43)	156 (6.14)	161 (6.34)	182 (7.17)	201 (7.91)	214 (8.43)	234 (9.21)	263 (10.35)	285 (11.22)	338 (13.29)	401 (15.78)	453 (17.82)	696 (27.42)
	Height	H2	104 (4.09)	104 (4.09)	104 (4.09)	104 (4.09)	104 (4.09)	104 (4.09)	104 (4.09)	80 (3.15)	86 (3.39)	86 (3.39)	99 (3.90)	108 (4.25)	114 (4.49)	124 (4.88)	138 (5.43)	143 (5.61)	168 (6.60)	198 (7.81)	223 (8.77)	339 (13.34)
	Height	H3	-	-	-	-	-	-	-	-	-	-	-	-	-	-	-	-	-	456 (17.95)	511 (20.12)	786 (30.94)
Remote Sensor	Maximum Height	Hr	281 (11.06)	281 (11.06)	281 (11.06)	281 (11.06)	281 (11.06)	281 (11.06)	281 (11.06)	255 (10.04)	273 (10.75)	278 (10.94)	299 (11.77)	318 (12.52)	331 (13.03)	351 (13.82)	380 (14.96)	402 (15.84)	455 (17.91)	518 (20.40)	570 (22.44)	814 (32.04)
	Approx. Weight, Unit: kg (lb) (*2)		3.9 (8.6)	3.9 (8.6)	3.9 (8.6)	4.1 (9.0)	4.1 (9.0)	4.1 (9.0)	4.2 (9.3)	4.8 (10.6)	6.4 (14.1)	7.1 (15.7)	8.9 (19.6)	9.9 (21.8)	12.4 (27.3)	15.0 (33.1)	20.7 (45.6)	29 (64.0)	44 (97.1)	73 (161.2)	91 (200.9)	247 (545.3)
Integral Flowmeter	Maximum Height	Hi	326 (12.83)	326 (12.83)	326 (12.83)	326 (12.83)	326 (12.83)	326 (12.83)	326 (12.83)	300 (11.81)	318 (12.52)	323 (12.72)	344 (13.54)	363 (14.29)	376 (14.80)	396 (15.59)	425 (16.73)	447 (17.60)	500 (19.67)	563 (22.16)	615 (24.20)	-
	Approx. Weight, Unit: kg (lb)		6.5 (14.3)	6.5 (14.3)	6.5 (14.3)	6.7 (14.8)	6.7 (14.8)	6.7 (14.8)	6.8 (15.0)	7.4 (16.3)	9.0 (19.8)	9.6 (21.2)	11.4 (25.1)	12.4 (27.3)	15.0 (33.1)	17.6 (38.8)	23.3 (51.4)	31 (68.4)	46 (101.6)	75 (165.6)	93 (205.3)	-
Grounding rings thin type (GRL, GRH, GRV) (*1)			+2 (+0.08)	+2 (+0.08)	+2 (+0.08)	+2 (+0.08)	+2 (+0.08)	+2 (+0.08)	+2 (+0.08)	+2 (+0.08)	+2 (+0.08)	+2 (+0.08)	+2 (+0.08)	+2 (+0.08)	+2 (+0.08)	+2 (+0.08)	+2 (+0.08)	+2 (+0.08)	+2 (+0.08)	+4 (+0.16)	+4 (+0.16)	-
Grounding rings thick type (GRN, GRJ, GRW) (*1)			+6 (+0.24)	+6 (+0.24)	+6 (+0.24)	+6 (+0.24)	+6 (+0.24)	+6 (+0.24)	+6 (+0.24)	+6 (+0.24)	+6 (+0.24)	+6 (+0.24)	+6 (+0.24)	+6 (+0.24)	+6 (+0.24)	+6 (+0.24)	+6 (+0.24)	+6 (+0.24)	+6 (+0.24)	+6 (+0.24)	+6 (+0.24)	+8 (+0.31)
Grounding rings thick type (GRN, GRJ, GRW) with gaskets (GA, GC, GD) (*1)			+10 (+0.39)	+10 (+0.39)	+10 (+0.39)	+10 (+0.39)	+10 (+0.39)	+10 (+0.39)	+10 (+0.39)	+10 (+0.39)	+10 (+0.39)	+10 (+0.39)	+10 (+0.39)	+10 (+0.39)	+10 (+0.39)	+10 (+0.39)	+10 (+0.39)	+12 (+0.47)	+12 (+0.47)	-	-	-
Metal hat grounding rings (GSN, GDN) (*1)			-	-	-	-	-	-	-	-	-	-	-	-	+6 (+0.24)	+6 (+0.24)	+6 (+0.24)	+6 (+0.24)	+6 (+0.24)	+6 (+0.24)	+6 (+0.24)	-
Grounding rings electrode type (GRP, GRT) (*1)			+28 (+1.10)	+28 (+1.10)	+28 (+1.10)	+28 (+1.10)	+28 (+1.10)	+28 (+1.10)	+28 (+1.10)	+29 (+1.14)	+29 (+1.14)	+29 (+1.14)	+29 (+1.14)	+29 (+1.14)	+29 (+1.14)	+29 (+1.14)	+29 (+1.14)	+34 (+1.34)	+34 (+1.34)	-	-	-
Grounding rings electrode type (GRP, GRT) with gaskets (GA, GC, GD) (*1)			+32 (+1.26)	+32 (+1.26)	+32 (+1.26)	+32 (+1.26)	+32 (+1.26)	+32 (+1.26)	+32 (+1.26)	+33 (+1.30)	+33 (+1.30)	+33 (+1.30)	+33 (+1.30)	+33 (+1.30)	+33 (+1.30)	+33 (+1.30)	+33 (+1.30)	+40 (+1.57)	+40 (+1.57)	-	-	-

*1: Add the value above (which is the total of both ends) to the lay length "L" when selecting optional grounding rings with/without gaskets.

*2: When submersible use or optional code DHC is selected, waterproof glands with union joints and cables are attached. When the cable length is 30-meters, add 9.5 kg (20.9 lb) to the weight in the table.

*3: The limit deviation of the lay length "L" is as follows.
- Size 2.5 to 200 mm (0.1 to 8 in.): 0/-3 mm
- Size 250 to 400 mm (10 to 16 in.): 0/-5 mm

Additional weight for FM (USA) Flameproof (FF2, FJ2, FT2)

Size	2.5	5	10	15	25	32	40	50	65	80	100	125	150	200	250	300
Lining Code	A	A	A	A	A	A	A	A	A	A	A	A	A	A	A	A
Flange Approx. Additional Weight, Unit: kg (lb)	-	-	-	-	0.1 (0.22)	0.2 (0.44)	0.2 (0.44)	0.3 (0.66)	0.4 (0.88)	0.4 (0.88)	0.7 (1.54)	0.7 (1.54)	3 (6.61)	4 (8.82)	8 (17.64)	10 (22.05)

All Rights Reserved. Copyright © 2017, Yokogawa Electric Corporation.

Terminal Configuration and Wiring

For Communication and I/O Suffix Code P0(EtherNet/IP), read SD 01E21C02-01EN.

Remote Sensor:

<To be wired to Remote Transmitter>

Non Explosion Protection Use

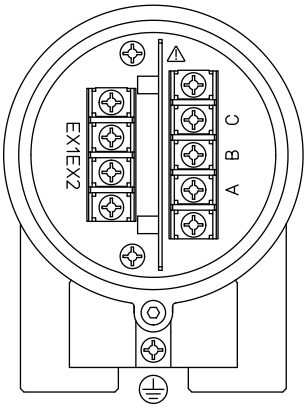

Explosion Protection Use

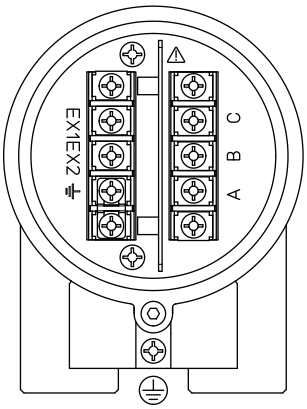

Terminal Symbol	Description
A **B** **C**	Flow Signal Output
EX1 **EX2**	Excitation Current Input
⏚	Protective Grounding (Outside of the terminal box)
⏚	Functional Grounding

F06.ai

Note: When submersible use or optional code DHC is selected, waterproof glands with union joints and cables are attached.

Integral Flowmeter:

<To be wired to Power Supply and I/Os>

M4 Screw Type

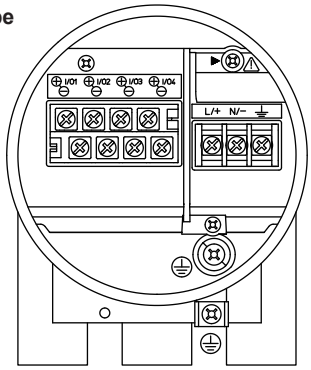

Clamp Type

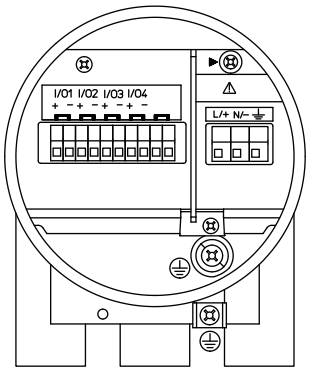

Terminal Symbol	Description
▶	Shorting Screw (Need to be fixed for normal operation)
⏚	Functional Grounding
N/- **L/+**	Power Supply
I/O4 - **I/O4 +** **I/O3 -** **I/O3 +** **I/O2 -** **I/O2 +** **I/O1 -** **I/O1 +**	Selected Input/Output
⏚	Protective Grounding (Inside and outside of the terminal box)

F07.ai

All Rights Reserved. Copyright © 2017, Yokogawa Electric Corporation.