Drawings

Vortex Flowmeter VY Series
VY100, VY150, VY200
Reduced Bore Type (2 Size Reduction)
Process Connection: JIS Flange

SD 01F07F03-02EN

● **Reduced Bore Type (2 Size Reduction): JIS Flange (Size 100 mm(4 inch), 150 mm(6 inch), 200 mm(8 inch))**

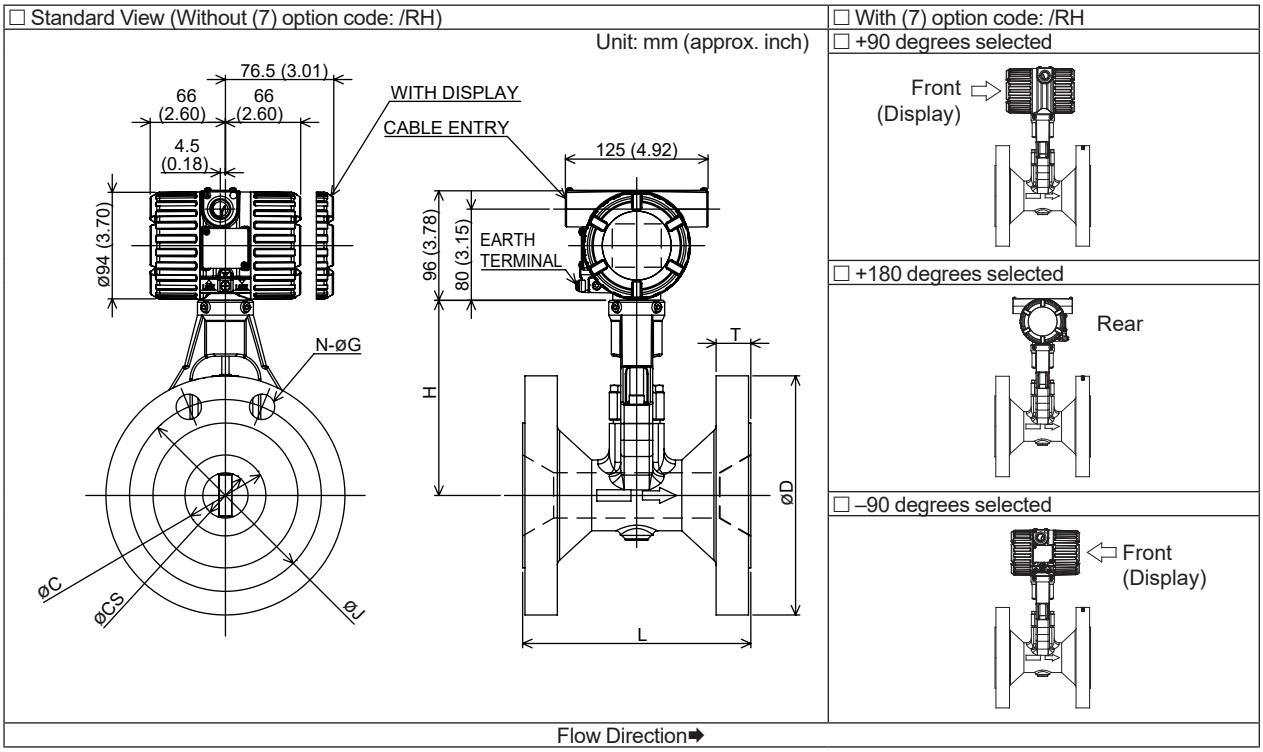

VY□□□ **-**□□□ **-2** □ □□ □□□□ **-**□ □ □□ □ **0 0** /□
(1) (2) (3) (4) (5) (6) (7)

• **Code details for SD**

(1) Model	VY100: Size 100 mm(4 inch), VY150: Size 150 mm(6 inch), VY200: Size 200 mm(8 inch)
(2) Type of Body	-2: Reduced Bore Type (2 Size Reduction)
(3) Type of Shedder Bar	A: General Type, B: General Type with Temperature Sensor, C: High Temperature Type, D: High Temperature Type with Temperature Sensor, E: Cryogenic Type, G: Long Neck Type, H: Long Neck Type with Temperature Sensor
(4) Process Connection JIS Flange	[Body Material, Face, Pressure Rating] BBJ☐: CF8M, Raised Face(RF), 10K to 20K ☐: Pressure Rating, 1= 10K, 2= 20K
(5) Cable Entry : One : Two	0: JIS G1/2 Female, 2: ASME 1/2 NPT Female, 4: ISO M20x1.5 Female A: JIS G1/2 Female, C: ASME 1/2 NPT Female, E: ISO M20x1.5 Female, J and K: [Only for Japan Flameproof] ISO M20x1.5 Female
(6) Communication and Input/Output	JA: HART 7 communication, 4 to 20 mA DC, Pulse/Status output JB: HART 7 communication, 4 to 20 mA DC, Pulse/Status output, Analog input F0: FOUNDATION Fieldbus Communication M0: Modbus Communication, Pulse/Status output NN: None (Remote Sensor)
(7) Options	/RH: Cable Entry Direction Change /☐: Other Options (No effect for structual demension)

All Rights Reserved, Copyright © 2022, Yokogawa Electric Corporation
Subject to change without notice. Printed in Japan.

SD 01F07F03-02EN
1st Edition: Feb. 28, 2022 (KP)
4th Edition: Oct. 31, 2023 (KP)

● Dimensions (Lay Length, Outer Diameter etc) and Weight for each Model

☐VY100		External Dimensions mm (approx. inch)						Weight kg(lb)*2
	(4) Process Connection Code: Body Material, Face, Pressure Rating	Lay Length L*1	Outer Diameter øD	Flange Thickness T	Bolt Circle Diameter øJ	No. of Bolt Holes N	Hole Diameter øG	
☐	BBJ1: CF8M, RF, 10K	220(8.66)	210(8.27)	18(0.71)	175(6.89)	8	19(0.75)	21.4(47.2) [21.8(48.1)]
☐	BBJ2: CF8M, RF, 20K	220(8.66)	225(8.86)	24(0.94)	185(7.28)	8	23(0.91)	25.4(56) [25.8(56.9)]

☐VY150		External Dimensions mm (approx. inch)						Weight kg(lb)*2
	(4) Process Connection Code: Body Material, Face, Pressure Rating	Lay Length L*1	Outer Diameter øD	Flange Thickness T	Bolt Circle Diameter øJ	No. of Bolt Holes N	Hole Diameter øG	
☐	BBJ1: CF8M, RF, 10K	270(10.63)	280(11.02)	22(0.87)	240(9.45)	8	23(0.91)	40.8(89.9) [40.8(89.9)]
☐	BBJ2: CF8M, RF, 20K	270(10.63)	305(12.01)	28(1.1)	260(10.24)	12	25(0.98)	50.8(112) [50.8(112)]

☐VY200		External Dimensions mm (approx. inch)						Weight kg(lb)*2
	(4) Process Connection Code: Body Material, Face, Pressure Rating	Lay Length L*1	Outer Diameter øD	Flange Thickness T	Bolt Circle Diameter øJ	No. of Bolt Holes N	Hole Diameter øG	
☐	BBJ1: CF8M, RF, 10K	310(12.2)	330(12.99)	22(0.87)	290(11.42)	12	23(0.91)	62.4(137.6) [62.4(137.6)]
☐	BBJ2: CF8M, RF, 20K	310(12.2)	350(13.78)	30(1.18)	305(12.01)	12	25(0.98)	69.4(153) [69.4(153)]

*1: Lay Length (L) tolerances are as follows:
- VY040 to VY200: ± 3.0 mm

*2: In case of Type of Shedder Bar: C, D, E, G or H, refer to the value in square brackets

● Dimensions (height and diameters) for each Model

	(1) Model	(3) Type of Shedder Bar	Height H mm (inch)	Inner Diameter øC mm (inch)	Sensor Diameter øCS mm (inch)
☐	VY100	A, B: General Type	198(7.8)	93.8(3.69)	51.1(2.01)
☐		C, D: High Temperature type, E: Cryogenic type, G, H: Long Neck type	258(10.16)	93.8(3.69)	51.1(2.01)
☐	VY150	A, B: General Type	215(8.46)	138.8(5.46)	71(2.8)
☐		C, D: High Temperature type, E: Cryogenic type, G, H: Long Neck type	275(10.83)	138.8(5.46)	71(2.8)
☐	VY200	A, B: General Type	236(9.29)	185.6(7.31)	93.8(3.69)
☐		C, D: High Temperature type, E: Cryogenic type, G, H: Long Neck type	296(11.65)	185.6(7.31)	93.8(3.69)

All Rights Reserved. Copyright © 2022, Yokogawa Electric Corporation

● Terminal Layout Diagram

☐ Integral Transmitter Case

Terminal screw size: M4

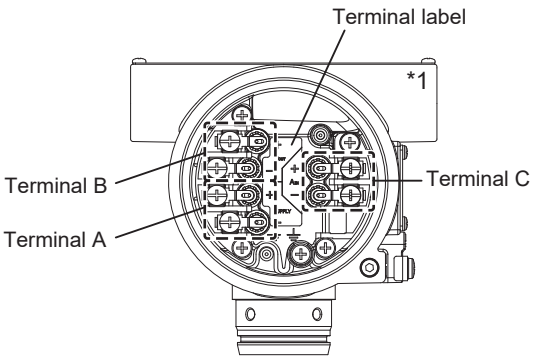

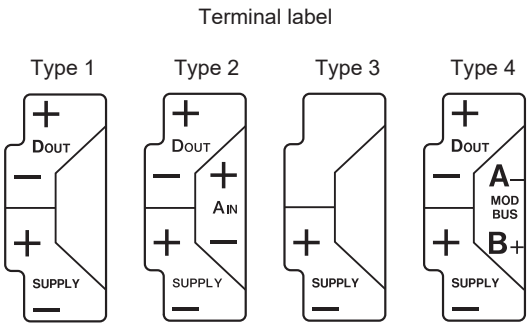

Terminal label	Communication and input/ output	Terminal A	Terminal B	Terminal C
Type 1	JA	SUPPLY +, SUPPLY – Power supply, HART communication and analog output	D_{OUT} +, D_{OUT} – Pulse/status output	–
Type 2	JB	SUPPLY +, SUPPLY – Power supply, HART communication and analog output	D_{OUT} +, D_{OUT} – Pulse/status output	A_{IN} +, A_{IN} – Analog input
Type 3	F0	SUPPLY +, SUPPLY – Power supply and FOUNDATION Fieldbus communication	– (*2)	–
Type 4	M0	SUPPLY +, SUPPLY – Power supply	D_{OUT} +, D_{OUT} – Pulse/status output	MODBUS A –, MODBUS B + Modbus communication

*1: When -0 (JIS G1/2 female, one electrical connection), -2 (ASME 1/2 NPT female, one electrical connection), or -4 (ISO M20x1.5 female, one electrical connection) is selected for the cable entry, it is only located on the right side in this view.
*2: Terminal B is a terminal block only and no screws are attached.

☐ Remote Sensor Terminal Box

Terminal screw size: M4

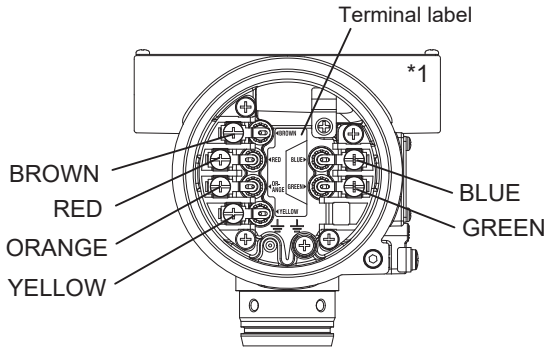

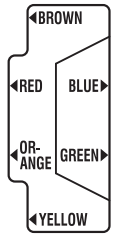

Terminal	Application
BROWN, RED, ORANGE, YELLOW, GREEN, BLUE (*2)	Connect the vortex fowmeter signal cable (VY1C)

*1: The cable entry is only located on the right side when viewed from the front.
*2: Match the colors of the vortex fowmeter signal cable (VY1C) with the corresponding terminals.

All Rights Reserved. Copyright © 2022, Yokogawa Electric Corporation