Drawings

SC210G-D-40□
Conductivity Detector with gate valve
for Medium Range

Unit: mm

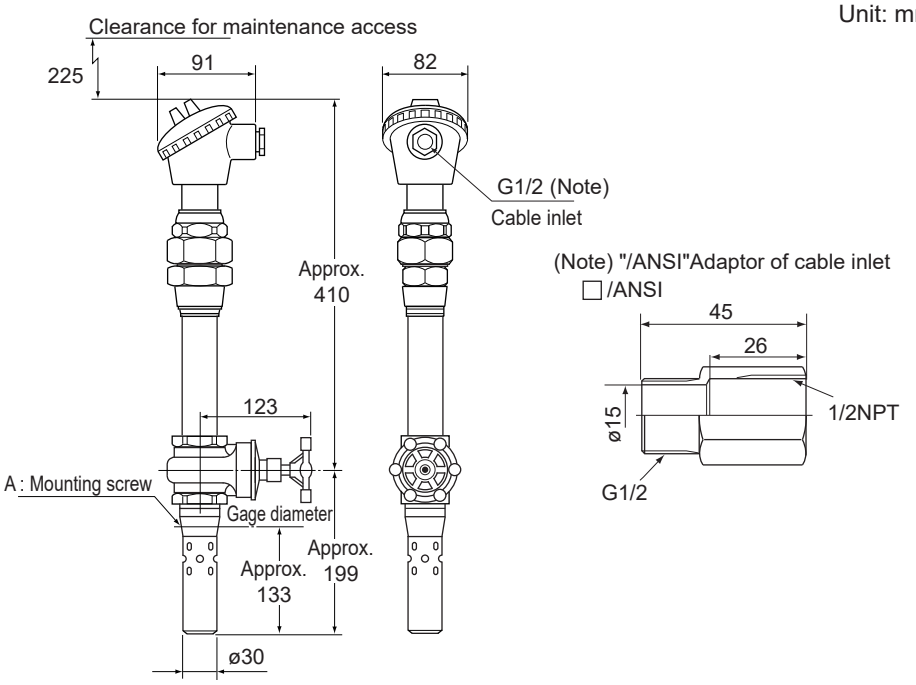

	Model and Code	A
	SC210G - □ - 402	R1-1/4
	SC210G - □ - 403	1-1/4NPT

Weight: Approx. 4.5kg

- **SC210G Detector - converter connection cable (accessory)**

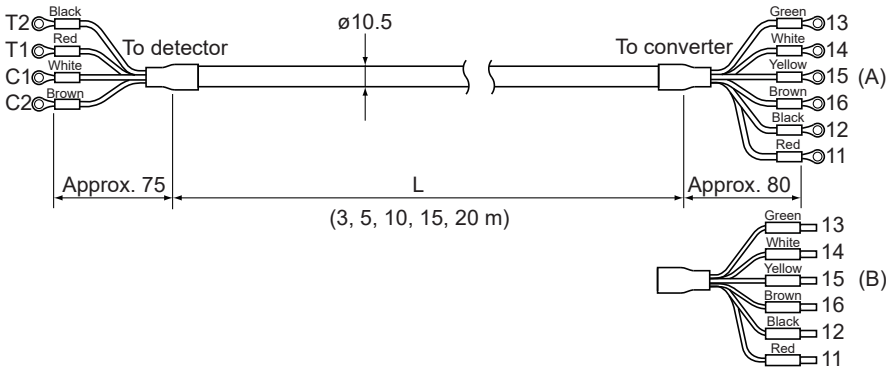

	Model and Code	L	Weight (kg)	Terminal
	SC210G - □ - 40□ - L□□□ - 03	Approx. 3000	Approx. 0.9	(A) M4 Ring terminal
	SC210G - □ - 40□ - L□□□ - Y1			(A) M3 Ring terminal
	SC210G - □ - 40□ - L□□□ - AA			(B) Pin terminal
	SC210G - □ - 40□ - L□□□ - 05	Approx. 5000	Approx. 1.5	(A) M4 Ring terminal
	SC210G - □ - 40□ - L□□□ - Y2			(A) M3 Ring terminal
	SC210G - □ - 40□ - L□□□ - BB			(B) Pin terminal
	SC210G - □ - 40□ - L□□□ - 10	Approx. 10000	Approx. 3.0	(A) M4 Ring terminal
	SC210G - □ - 40□ - L□□□ - Y3			(A) M3 Ring terminal
	SC210G - □ - 40□ - L□□□ - CC			(B) Pin terminal
	SC210G - □ - 40□ - L□□□ - 15	Approx. 15000	Approx. 4.5	(A) M4 Ring terminal
	SC210G - □ - 40□ - L□□□ - Y4			(A) M3 Ring terminal
	SC210G - □ - 40□ - L□□□ - DD			(B) Pin terminal
	SC210G - □ - 40□ - L□□□ - 20	Approx. 20000	Approx. 6.0	(A) M4 Ring terminal
	SC210G - □ - 40□ - L□□□ - Y5			(A) M3 Ring terminal
	SC210G - □ - 40□ - L□□□ - EE			(B) Pin terminal

Unless otherwise specified, differences in the dimensions are specified as: General tolerance = ±(Criteria of tolerance class IT18 in JIS B0401-1998)/2.

All Rights Reserved, Copyright © 1998, Yokogawa Electric Corporation.
Subject to change without notice.

1st Edition: Mar. 1998 (YK)
8th Edition: June 2023 (YK)