Operating & Maintenance Manual

Advance Reflux Sampler

YARS100-SAA

vigilantplant.®

The clear path to operational excellence

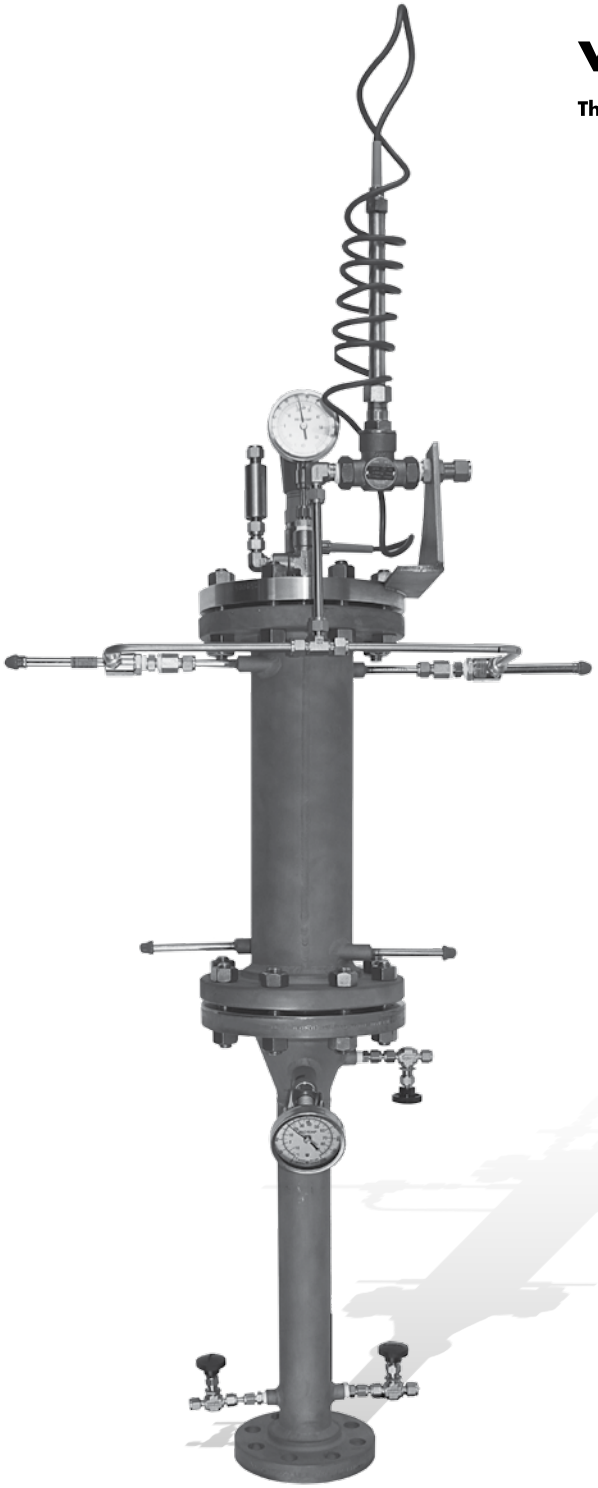

YOKOGAWA

Yokogawa Corporation of America
2 Dart Road, Newnan, Georgia U.S.A. 30265
Tel: 1-800-888-6400 Fax: 1-770-254-0928

IM 11A00V01-01E-A

1st Edition

The following safety symbols are used on the product as well as in this manual.

DANGER

This symbol indicates that an operator must follow the instructions laid out in this manual in order to avoid the risks, for the human body, of injury, electric shock or fatalities. The manual describes what special care the operator must take to avoid such risks.

WARNING

This symbol indicates that an operator must refer to the instructions in this manual in order to prevent the instrument (hardware) or software from being damaged, or a system failure from occurring.

CAUTION

This symbol gives information essential for understanding the operations and functions.

NOTE

This symbol indicates information that complements the present topic.

Operating and Maintenance Manual

1. INTRODUCTION

Overview

The Advanced Reflux Sampler (YARS100) has been developed specifically to meet the needs of modern petrochemical analyzer sampling, especially ethylene cracked gas effluents.

1.1 Features

Based on a proven simpler concept, the YARS includes several technologically advanced features outlined below:

- Self-acting temperature controller requiring no electrical power supply – Adjustable across the selected control range.
- Dual 360° cooling coils section ensures optimal sample cooling
- Outlet filter mesh/screen for mist trap to deter liquid carry over
- Sample outlet over temperature shut-off valve – Factory set for a pre-determined shut-off temperature and typically with a 10°F span between fully open and fully closed.
- Enhanced, high stability temperature control system design
- High sample flow rate 3-5 liters per minute for reduced lag time
- A multitude of options configured specifically for your application

CAUTION

SAFETY should be considered first and foremost importance when working on the equipment described in this manual. All persons using this manual in conjunction with the equipment must evaluate all aspects of the task for potential risks, hazards and dangerous situations that may exist or potentially exist. Please take appropriate action to prevent ALL POTENTIAL ACCIDENTS.

2. GENERIC SPECIFICATIONS

Product development is a continuous policy of Yokogawa and therefore specifications may be subject to change without notice

The following generic specifications apply however; please check exact features and model number with serial numbers on the units provided.

A) Process Connection:

Process flange ratings are ASME B16.6-1996

B) Sample Outlet Connection:

Standard 3/8" o.d. Sawgelock® stainless steel

Flow Rate: Typically 3 Lts./min conditioned at 15°C or 4 Lts./min conditioned at 20°C, pending application

Pressure: ΔP across ARS, < 1psi

NOTE

The sample transport line should be heat traced and insulated to prevent subsequent sample condensation.

C) Mounting:

Vertical on top of customer supplied process isolation valve for horizontal process line.

NOTE

If mounting on vertical process line, install appropriate elbow or Y-piece prior to process isolation valve to ensure ARS mounted in vertical position – Refer to Installation details.

D) Instrument Air Connection:

Standard 1/2" o.d. Sawgelock®, stainless steel

Supply Pressure: 60-110 psig (~ 54-7.5 Bar)

Flow Rate: Dual 10 SCFM Vortex Tubes: Standard

Dual 15 SCFM Vortex Tubes: Optional

Grade: Clean, Dry, Oil Free and <5μ particles with –40°C dew point and ISA grade HC free

E) Steam Supplement Connection: Filter Section

Standard ¼" o.d. Sawgelock®, stainless steel

Pressure: 50-150 psig

Temperature: maximum 238oC

F) Materials of Construction:

Lower filter section: 316 stainless steel

Lower filter mesh: 316 stainless steel knitted, 0.011" diameter wire

Inlet temperature section: 316 stainless steel

Heat Exchanger: 316 stainless steel

G) Electrical Power supply:

Not Required

H) Self Acting Controller:

Adjustable set-point indicating dial

316 Stainless steel sample wetted parts

Brass body air control valve, high CV

Highly reliable with practically no moving parts

I) Shipping Details

Size: Approximately 56 in (1422 mm) H x 24 in (609 mm) W x 12 in (304 mm)D

Weight: Approximately 110 lbs (49.8 kg) without optional equipment

3. THEORY OF OPERATION

This section of the manual describes the basic theory of operation, designed to give the user a better understanding and help in operation and maintenance.

3.1 Brief History of Reflux Samplers

The concept of the Reflux Sampler was introduced in mid 1970's and until the inception of the Advanced Reflux Sampler (YARS), it had changed very little. Process analysis needs during the mid 1970's were not as critical as they are now and consequently, the Reflux Samplers designed previously no longer meet today's demands that are more stringent. The reflux sampler was originally designed to overcome the problem of constantly plugging sample probes installed on the Transfer Line Exchangers (TLE) of ethylene cracking furnace effluents. This high temperature cracked gas effluent is high in particulate and condensables (moisture and heavy hydrocarbons) content and therefore prone to plugging. The idea that the condensables could be used to backwash a particulate filter was conceived and a Reflux Sampler was then developed. A simple filter mesh was used to trap the particulate matter.

3.2 Filter Section

The lower section of the YARS is for particulate filtration and provides some primary sample cooling. Typically flange mounted directly to a customer supplied process isolation valve and flange mounted to the heat exchanger section of the YARS. The filter media is nominally stainless steel wire mesh that traps any particulate matter such as coke from the ethylene furnaces and/or catalyst fines. During normal operation, the temperature at the filter section outlet should be in the order of 120°F (50°C), indicating a balanced refluxing condition is established. This filter section is cooled by the condensate that has dropped out from the heat exchanger mounted directly above the filter. The condensate also acts as a trap for finer particulate matter. In certain environmental conditions where sub-zero temperatures are anticipated, it may be desirable to insulate the filter section. This will prevent premature condensing and allow for a balanced refluxing action.

3.3 Steam Supplement

For the YARS to function reliably there must be sufficient quantity of condensable media in the sample. For applications that have high particle loading and limited condensables present, steam should be added at the inlet. The YARS filter section has a steam inlet facility located at the inlet. A suitably rated needle valve is provided for regulating a nominal flow of steam in to the filter section via an inverted tube such that the steam is directed up in to the filters. Note that the steam is added directly to the sample and therefore the composition will be affected the H_2O addition. As each application has many different operating parameters, there are no specific settings for the quantity of steam addition and each application is set-up individually.

3.4 Inlet Temperature Section

Mounted between the filter and heat exchanger section is the inlet temperature thermowell. As standard, a suitable temperature gauge is installed in the thermowell. The purpose of temperature measurement at this point in the YARS is to help establish the correct temperature gradient required for refluxing. The two undesirable conditions within the filer section are as below:

- Temperature reading too high – will cause the heat exchanger to work excessively and indicates a problem elsewhere in the system
- Temperature reading too low – will cause the condensable media to dropout early in the filter section and not provide proper filter cleansing by reflux.

When troubleshooting the YARS, consider the correct temperature at this point.

3.5 Heat Exchanger Section

This is truly unique to the YARS in many respects. This section provides the cooling of the sample and is most critical to the overall operation. As the sample gas rises from the filter section, through the inlet temperature section, it is channeled in to the heat exchanger chamber. The sample gas rises through a chamber in which the cooling coils are concentrically mounted. The design of the heat exchanger is such that maximum surface area contact between the cooling coils and

the sample gas is achieved. There are two cooling coils located in the same heat exchanger chamber, which helps provide more accurate and efficient cooling. In the head-space of the heat exchanger, a stainless steel fine filter mesh is installed to act as a mist trap and final liquid sample droplet trap prior to existing the sampler. Flow of the cooling media through each coil is automatically controlled to ensure a constant outlet temperature is maintained. The sample is normally saturated at the outlet temperature and pressure. The cooling media is supplied by vortex air cooler(s) via the self-acting controller.

3.6 Outlet Temperature Section

Located on the outlet of the heat exchanger is the outlet temperature indicator. For self-acting controller units, a temperature sensor is installed. The self-acting temperature controller is located (screwed) directly in to the top of the heat exchanger in to the headspace area. This provides the most accurate temperature reading and control of the actual sample outlet temperature. The purpose of temperature measurement at this point in the YARS is to control the final outlet temperature (or maximum dewpoint). Depending upon the application, this outlet temperature may be typically between 41-80°F (5-27°C).

3.7 Self Acting Temperature Controller

The operation and maintenance of the adjustable self-acting temperature controller is described herein.

3.8 Instrument Air for the Vortex Tube

The standard media used by the Vortex air tube(s) is ISA grade Instrument air. It is possible to change the cool air outlet temperature by adjusting the recessed screw (needle valve) located in the hot air exhaust. A counter-clockwise adjustment of the valve will produce colder temperatures while a clockwise adjustment will produce warmer temperatures. This ability to adjust the temperature may be considered when fine-tuning the temperature control system to ensure optimum temperature stability. The performance of the Vortex tubes is also based on the incoming instrument air temperature. For more efficient operation, avoid direct sun light (and other heat emitting sources) when running the air line.

3.9 Vortex Theory of Operation:

Vortex tubes are simple devices that contain no moving parts and therefore may be used as a reliable device for generating a cold air supply. Compressed air (clean, dry, ISA Grade) will enter the cylindrical chamber (to the left of the diagram) and is caused to rotate internally. This rotating air moves down the inner walls of the hot air exhaust chamber at extremely high velocity. When exiting the hot exhaust (to the top of the diagram), a portion of the air is directed back through the center at lower speed than the exiting air. Heat transfer from the inner, slow moving air to the exiting, fast moving air causes cold air to be generated. This cold air exits via the cold air exhaust (shown at the bottom of the diagram).

Vortex tubes produce less air flow at colder temperatures and have less BTUH capacity. Tubes are available in a variety of sizes depending upon the application. Maximum efficiency will be achieved when operating at 100 psig instrument air pressure and while they can operate at lower pressure, the efficiency will be less (typically 60% efficient at 55 psig)

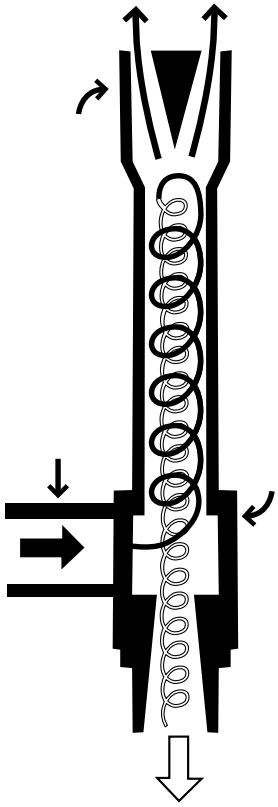

4. UTILITY REQUIREMENTS

Section 2 – General Specification listed above defines the required utilities needed for YARS operation. Also, refer to the General Installation drawing provided specifically for the YARS by serial number for the hook-up details.

4.1 Instrument Air

The media used by the Vortex air tube(s) is ISA grade Instrument air. Plant Nitrogen may be used in place of the air, provided it meets the required pressure and flow demands of the YARS. The air shall be clean, dry (-40°C dew point), oil free and contain particles <5µ. The instrument air pressure at the YARS shall be 60-100 psig (~ 4-7 Barg). Failure to use a filter will cause potential freezing and clogging of the compressed air path inside the Vortex Tube. **Filter elements must be changed on a regular basis. Frequency of change is determined by the conditions of the compressed air supply.**

At pressure less than this, the Vortex tube performance declines significantly and may be unable to provide the required quantity of cooling air. Any instrument air-line run to the YARS in the field should be 1/2” o.d. to ensure adequate flow at the desired pressure.

Electronically controlled samplers use two vortex tubes, each typically with a 4 SCFM flow capacity (Check Data Sheets for your installed model) however, the actual air demand during normal operation will vary depending on the changing process and climatic conditions at each site.

CAUTION

- ***COMPRESSED AIR COULD CAUSE DEATH, BLINDNESS OR INJURY***
- ***DO NOT OPERATE A VORTEX TUBE AT AIR PRESSURES ABOVE150PSIG (10.3 BARG)***
- ***DO NOT OPERATE A VORTEX TUBE AT LINE TEMPERATURES ABOVE 110OF (43OC)***
- ***AVOID DIRECT CONTACT WITH COMPRESSED AIR***
- ***DO NOT DIRECT COMPRESSED AIR AT ANY PERSON***
- ***WHEN USING COMPRESSED AIR, WEAR SAFETY GLASSES AND SIDE SHIELDS***

The performance of the Vortex tubes is also based on the incoming instrument air temperature and therefore, for more efficient operation, avoid direct sun light (and other heat emitting sources) when running the air-line.

4.2 Low Pressure Steam

The sampler is equipped with low-pressure steam injection valve located in the lower filter section. Steam may be used either as an addition at the inlet (for assisted reflux action), or for cleansing through either the inlet or outlet.

NOTE

Do not use steam temperatures in excess of 232°C (450°F).

Ensure the needle valves are closed prior to connecting the steam supply and ensure the steam supply line is adequately insulated. Connect the steam supply directly to the needle valve supplied with the sampler.

NOTE

WHEN OPERATING WITH STEAM, NOTE THAT SURFACES MAY BE EXTREMELY HOT AND CAN CAUSE SEVERE BURNS AND OTHER PERSONAL INJURIES – ADHERE ALL SAFETY PROCEDURES APPLICABLE AT SITE FOR STEAM SERVICES - FAILURE TO DO SO COULD RESULT IN INJURY OR DEATH.

5. INSTALLATION

5.1 Mechanical Considerations

Typically, the YARS will be subject to large vibration conditions and therefore a sound mechanical installation is required. While flange mounting to the customer supplied process isolation valve provides an installation, it is also recommended that the upper section of the YARS be secured mechanically. The heat exchanger and controller give the YARS 'top-heavy' properties that should be considered during installation.

It is also desirable to have ready access to the unit such that routine maintenance checks can be made on the operation of the unit in a safe manner.

Ensure that an appropriate gasket is used between the flange mounting faces and when tightening the flange mounting bolts to the process isolation valve, please ensure that the correct torque is applied (typically 100 foot pounds for a 2" 300# flange). As with any flanged bolt tightening, ensure that the correct sequence of tightening is followed (typically as shown below):

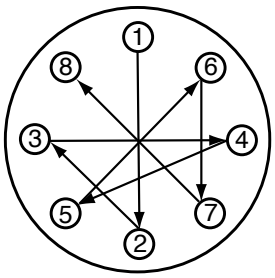

5.2 Fast Loop Line Size and Response Times

The following table may be used when estimating sample line sizes, response times and resultant pressure drop through the line. These calculations are based on a typical ethylene cracked gas effluent sample and should be used for estimating purposes only:

Sample Line Size Stainless Tube	Sample Line Length	Sample Flow Rate Lts/min	Response Time Seconds
¼"	200'	1.5	39
¼	200'	3	19
¼	200'	4.5	13
3/8"	200'	1.5	108
3/8"	200'	3	54
3/8"	200'	4.5	34

5.3 Insulation

The heat exchanger and top flange section of the YARS MUST always be insulated by at least two inches (obtained from a local supplier). This will reduce the influences of ambient air temperature fluctuations and cause the heat exchanger to operate more efficiently. Insulation should be installed at site after installation and leak testing and should be configured for possible future maintenance and access.

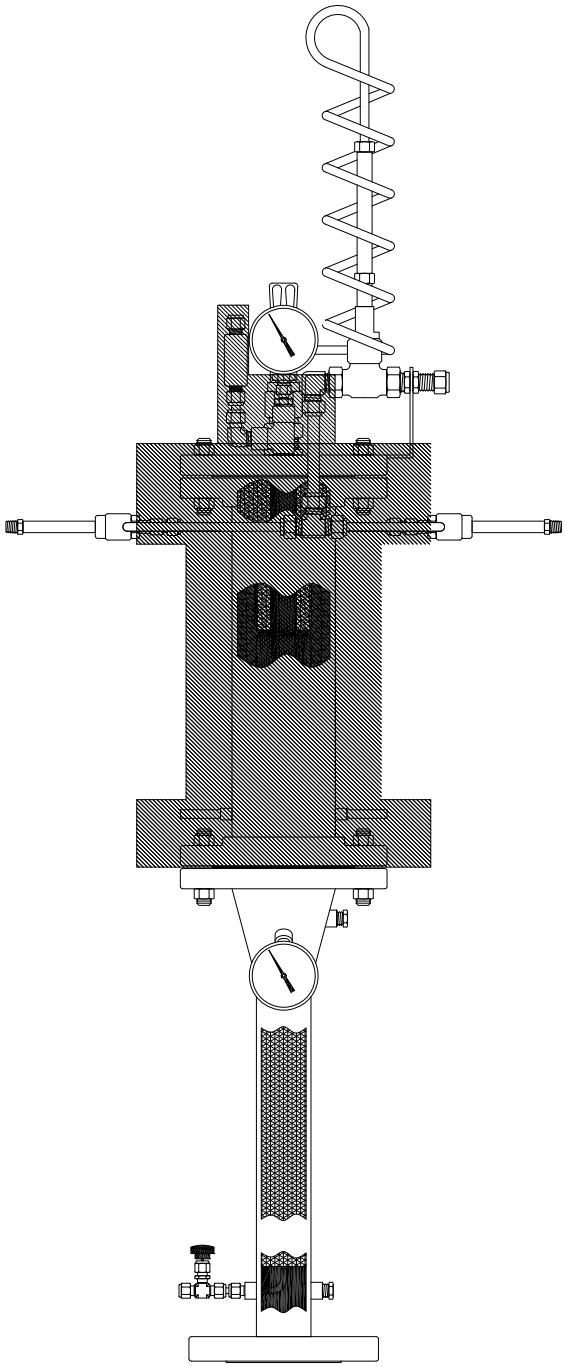

It is generally required to have the filter section insulated only when ambient temperatures fall below 32°F (0°C). Insulation should conform to appropriate site standards. This insulation may not be required during hot summer months however only on-site experience can determine the exact insulation requirements for the filter section.

6. START-UP

1. Ensure the installation has been carried out in accordance with the unit requirements and any appropriate regulations/ standards applicable for the site.
2. Turn on instrument air supply and adjust pressure as required. Check for any leaks in the system.
3. Check for any leaks in the process and sample line connection. Rectify Accordingly.
4. Insulate the heat exchanger section, including the top flange assembly and over-temp shut off valve on top of the heat exchanger.
5. As the system begins to cool down, slowly allow sample flow through the sampler. Increase gradually so that excessive temperature does not cause the sample over temperature valve to shut-off flow. It may be necessary to increase the sample flow in gradual steps (1 ltr/min increase every 10 minutes). This will allow the sample to maintain cooling control on the sample. A sudden step change from 0 to 5 ltr/min may temporarily exceed the cooling capacity and cause Over Temperature shut-off.
6. After the system has stabilized in temperature, note the sample outlet temperature reading. This should be within +/- 2°C (+/-6.5°F) of the desired sample outlet temperature. Adjust outlet temperature at the control dial as required to reach the desired set-point.

NOTE

Proper insulation of the entire heat exchanger and outlet section will ensure optimal performance and temperature stability. Failure to do so will result in poor performance and temperature drift due to ambient air temperature fluctuations.

7. OPERATION

During normal operation, the YARS will function automatically.

7.1 Vortex Tubes

Adjustment to the Vortex Tube can be made to vary to temperature of the cooling air provided to the heat exchangers. A counter-clockwise adjustment of the brass needle valve (recessed in the hot exhaust) will produce colder air, while turning the needle valve in a clockwise direction produces warmer air.

7.2 Steam Injection

Depending upon the site process conditions, it may or may not become necessary to continuously inject a small volume of low pressure steam. With the steam supply correctly installed, open the needle valve ½ turn allowing a small volume of steam in to the sample. Note the sample flowrate after steam injection to be sure that the steam does not over pressure the sample and interfere with the sample flow. If the ½ turn does not produce sufficient additional reflux action, then adjust a further ½ turn, again observing the sample flow. This procedure can be carried out several times until correct reflux action occurs without interfering with sample flow. Note, excessive steam may cause the filter section ,and consequently the heat exchanger to become too hot, thereby impairing temperature control.

7.3 Controller

The self-acting controller is adjustable. Refer to the attached for additional details.

8. MAINTENANCE

When set-up and operated correctly, the YARS will require no routine maintenance other than filter cleansing, normally during a routine de-coke cycle and/or shut-down.

8.1 Filter Section and/or Heat Exchanger Cleaning

To avoid filter section plugging, it is recommended that a routine steam clean be carried out on the filter section. Actual site operating conditions will determine the optimal cleansing period and duration and this may typically be required every 3-4 months.

The filter section may be cleaned using steam and or any site approved solvents. After cleaning and/or replacement of filter mesh, ensure any traces of cleaning solvents have been removed to avoid any analytical cross contamination when the unit is returned to service.

The heat exchanger section should not ordinarily require any cleaning, however it is possible to introduce steam through the sample outlet port located at the top exit of the sampler. Ensure the outlet temperature indicator is isolated from the steam during heat exchanger cleansing.

If required, a replacement filter cartridge may be installed – Refer to factory for details.

CAUTION

When using steam, ensure all appropriate safety precautions are OBSERVED ~ avoid accidental burns!

8.1.1 Heat Exchanger Filter Mesh

Located inside the top heat exchanger section of the sampler is a 4” filter mesh pad assembly. This acts as a de-misting pad and final heat transfer/filtration device prior to sample outlet. It is constructed of stainless steel and may be steam cleaned or replaced as needed. Refer to factory for replacement filter.

8.1.2 Filter Section and Sample Outlet Temperature Gauge

Please follow the manufactures recommendations for calibration and adjustment of the filter section temperature gauge.

9. TROUBLE SHOOTING

The following may assist in trouble shooting and fault diagnostics:

9.1 Vortex Tubes

Insufficient air flow can be caused by the following:

1. Undersized compressed air supply line.
2. Compressed air line pressure too low.
3. Insufficient compressed air volume (SCFM).
4. Partial or complete blockage of internal compressed air path due to dirt, etc.
5. Compressed air line temperature too high.
6. Loose cold cap (if disassembled for cleaning).

10. SUB-COMPONENT DOCUMENTATION

This section contains sub-component manufacturers information and supporting documentation that may be of use to operators.

10.1 Compressed Air Line Sizes

Compressed air lines should be sized to hold pressure drops to a minimum. So not used restrictive fittings such as quick connects. They can “starve” the Vortex Tube by causing line pressure drop. The following chart gives suggested line sizes for pipe and hose.

Line Sizes for Runs Up To:	**10 FT** (3 M)		**10 - 50 FT** (3 - 15 M)		**50 - 100 FT** (15 - 30.5M)	
	Pipe	Hose	Pipe	Hose	Pipe	Hose
	1/4”	3/8”	3/8”	1/2”	1/2”	5/8”

10.1.1 Compressed Air Supply

For best performance, use line pressure 80 to 100 PSIG (5.5 – 6.9 BAR). Vortex Tubes are rated in SCFM (SLPM) at 100 PSIG (6.9 BAR) supply pressure.

With proper filtration and separation for dirt, moisture and oil from the compressed air supply, the Vortex Tube will run for years with no maintenance required. Use a 25 micron or smaller filter separator that is sized to SCFM (SLPM) rating of the Vortex Tube.

To prevent problems associated with oil, use an appropriate Oil Removal Filter for Vortex Tubes up to 30 SCFM (850 SLPM) . The oil removal filter should be used downstream from the automatic drain filter separator. Filter should be used within 10 to 15 ft (3 to 4.6 m) of each Vortex Tube.

For Replacement or Repair filter and regulator parts contact Yokogawa.

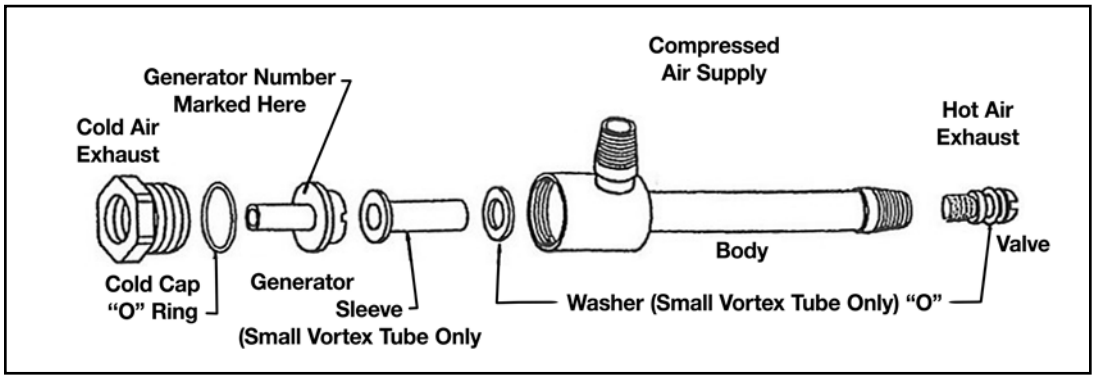

10.1.2 Setting the Vortex Tube

Hot and cold temperatures produced by a Vortex Tube are infinitely variable by adjusting the slotted valve at the hot air exhaust. Opening the valve reduces the cold airflow and the cold air temperature, Closing the valve increases the cold airflow and the cold air temperature.

Set the Vortex Tube with a thermometer. To measure temperature accurately, it should be inserted into the cold muffler or a piece of tubing on the cold end exhaust.

10.1.3 Troubleshooting & Maintenance

If the Vortex Tubes Does Not perform properly, check for these common problems:

1.) ***Loosed Cold Cap or Cold Muffler***- A loosed cold cap or cold muffler will cause poor performance. Make sure it is tight.

2.) ***Inlet Pressure***- Low inlet pressure supply will cause poor performance. Measure the pressure at the compress air

inlet of the Vortex Tube while it is operating. Restrictions in the compressed air supply line can cause excessive pressure drops and deteriorate performance.

3.) ***Inlet Temperature***- A Vortex Tube provides a temperature drop from supply air temperature. In some cases, the supply air is warmer than ambient air due to compressed air lines running across ceilings, near furnaces, direct sun, etc. In this case, the cold air may be warmer than anticipated and adequate refrigeration may not be available for the application.

4.) ***No Cold Flow***- If the Vortex Tube is operated continuously for an extended period of time and is set for more than a 50ºF (25ºC) drop from the compressed air temperature, the cold end may freeze, blocking the cold outlet. If this happens, any one of the following will correct the problem:

a. Blow air (use an air gun) into the cold end with the Vortex Tube off.

b. Turn the Vortex Tube off for a few minutes. It will thaw.

c. Use dry air with an atmospheric dew point of -40º or less.

5.) ***Back Pressure*** - The performance of a Vortex Tube deteriorates with back pressure on the cold air exhaust. Pressure up to 2 PSGIG (0.1 BAR) will not change performance. 5 PSIG (0.3 BAR) will change performance by approximately 5ºF (2.8ºC). If cold air ducting is used, the total-cross-sectional area should be equal or greater than the area of the Vortex Tube cold air exhaust.

10.2 Installation and Maintenance Instructions for Control Valves

10.2.1 General Safety Information

These products are designed and constructed to withstand the forces encountered in normal use. The normal operation and limits for temperature and pressures are stated in the *General Specifications* in section 2.

Safe operation of these units can only be guaranteed if they are properly installed, commissioned and maintained by a qualified person in compliance with the operating instructions. General installation and safety instructions for pipeline and plant construction, as well as the proper use of tools and safety equipment must also be complied with.

10.2.1.1 Warning - Laminated gaskets

The metal foil sheet used to reinforce gaskets is very thin and sharp. Care should be taken when handling to avoid the possibility of cuts or lacerations to fingers or hands.

10.2.1.2 Isolation

Consider whether closing isolating valves will put any other part of the system or personnel at risk. Dangers might include; isolation of vents and protective devices or alarms. Ensure isolation valves are turned oft in a gradual way to avoid system shocks.

10.2.1.3 Pressure

Before attempting any maintenance consider what is or may have been in the pipeline. Ensure that any pressure is isolated and safely vented to atmospheric pressure before attempting to maintain the product, this is easily achieved by fitting Yokogawa depressurization valves (see separate literature for details). Do not assume that the system is depressurized even when a pressure gauge indicates zero.

10.2.1.4 Temperature

Allow time for temperature to normalize after isolation to avoid the danger of burns and consider whether protective clothing (including safety glasses) is required.

10.2.1.5 Disposal

These products are recyclable. No ecological hazard is anticipated with the disposal of these products providing due care is taken.

10.2.2 Installation and Commissioning

NOTE

Before starting any installation observe the "Safety information" Section 10.2.1.

The valve should always be fitted in a horizontal pipeline with the flow in the direction indicated by the arrow marked on the body with the sensor in a vertical plane below the pipeline as shown in Fig. 1 .(SA control system). Valves should be mounted in the pipeline in accordance with the actuator installation and Maintenance Instructions.

A suitable strainer should always be fitted upstream of the valve. Additionally on steam installations a separator should be fitted before the valve, plus a steam trap set on applications where condensate may accumulate upstream of the valve

WARNING

The control system actuator must be securely connected to the valve via the screwed connection on the bottom of the valve and the half union coupling on the actuator before any fluid is allowed to pass through the valve. Similarly, the actuator should not be disconnected from the valve until the valve itself. is fully isolated

It is important that line stresses i.e. expansion or inadequate supporting of the pipe are not imposed on the valve body.

If the valve is properly sized for the duty it has to perform it will often be smaller than the pipeline. This is particularly so where the medium passing through the valve is steam, in which case any reduction in line size should be made using eccentric reducers. The piping on both upstream and downstream sides of the valve must be of ample size to avoid undue pressure drop in the line and any reduction to meet the size of the valve should be made close to the valves as shown in Fig. 1

It is advisable to protect the valve by fitting a strainer on the upstream side. By fitting the strainer on its side where the medium is steam you will prevent the body filling with water which would reduce the screening area.

In most steam installations~ water formed by condensation due to radiation losses will be present in the upstream pipeline and should be removed by an adequate drain point and trap, as shown in Fig. 1.

NOTE

For commissioning instructions refer to the Operation, Installation and Maintenance Instructions, covering Yokogawa control systems.

10.3 Safety Information

10.3.1 Hazardous Liquids or Gases in the Pipeline

Consider what is in the pipeline or what may have been in the pipeline at some previous time. Consider: flammable materials, substances hazardous to health, extremes of temperature.

10.3.2 Hazardous Environment around the Product

Consider: explosion risk areas, lack of oxygen (e.g., tanks, pits), dangerous gases, extremes of temperature, hot surfaces, fire hazard (e.g. during welding), excessive noise, moving machinery.

10.3.3 The System

Consider the effect on the complete system of the work proposed. Will any proposed action (e.g. closing isolation valves, electrical isolation) put any other part of the system or any personnel at risk?

DANGER

Dangers might include isolation of vents or protective devices or the rendering ineffective of controls or alarms. Ensure isolation valves are turned on and off in a gradual way to avoid system shocks.

10.3.4 Pressure Systems

Ensure that any pressure is isolated and safely vented to atmospheric pressure. Consider double isolation (double block and bleed) and the locking or labeling of closed valves. Do not assume that the system has depressurized even when the pressure gauge indicates zero.

10.3. 5 Temperature

Allow time for temperature to normalize after isolation to avoid danger of burns.

10.3.6 Tools and Consumables

Before starting work ensure that you have suitable tools and/or consumables available. Use only genuine Yokogawa replacement parts.

10.3.7 Protective Clothing

Consider whether you and/or others in the Vicinity require any protective clothing to protect against the hazards of, for example, chemicals, high/low temperature, radiation, noise, falling objects, and dangers to eyes and face.

10.3.8 Permits to Work

All work must be carried out or be supervised by a suitably competent person. Installation and operating personnel should be trained in the correct use of the product according to the Installation and· Maintenance Instructions. Where a formal ‘permit to work’ system is in force it must be complied with. Where there is no such system, it is recommended that a responsible person should know what work is going on and, where necessary, arrange to have an assistant whose primary responsibility is safety.

Post ‘warning notices’ if necessary.

10.3.9 Handling

Manual handling of large and/or heavy products may present a risk of injury. Lifting, pushing, pulling, carrying or supporting a load by bodily force can cause injury particularly to the back. You are advised to assess the risks taking into account the task, the individual, the load and the working environment and use the appropriate handling method depending on the circumstances of the work being done,

10.3.10 Residual Hazards

In normal use the external surface of the product may be very hot. If used at the maximum permitted operating conditions the surface temperature of some products may reach temperatures of 300ºC.

Many products are not self-draining. Take due care when dismantling or removing the product from an installation (refer to ‘Maintenance instructions’).

10.3.11 Freezing

Provision must be made to protect products which are not self-draining against frost damage in environments where they may be exposed to temperatures below freezing point.

10.3.12 Disposal

Unless otherwise stated in the Installation and Maintenance Instructions, this product is recyclable and no ecological hazard is anticipated with its disposal providing due care is taken.

10.3.13 Returning Products

Customers and stockiest are reminded that under EC Health, Safety and Environment Law, when returning products to Yokogawa they must provide information on any hazards and the precautions to be taken due to contamination residues or mechanical damage which may present a health, safety or environmental risk. This information must be provided in writing including Health and Safety data sheets relating to any substances identified as hazardous or potentially hazardous.

10.4 Installation and Maintenance Instructions for Temperature Control Valve Systems

10.4.1 Safety Information

This product is designed and constructed to withstand the force encountered in normal use. Use of the product for any purpose other than as a temperature controller could cause Injury or fatality to personnel.

NOTE

This product contains Kerosene which is highly inflammable.

10.4.2 Installation

Check that the control system supplied is of the temperature range required. It is important that the whole of the temperature sensing area of the sensor is fully immersed in the fluid being controlled, see Fig. 1.

WARNING

The sensor must not be subjected to mercury or ammonium salts.

The sensors can be held in a screwed nipple by means of a compression ring. Screw the nipple into the boss provided on the plant, thread the union nut and compression ring over the sensor. Insert the sensor fully into the nipple and tighten up the nut and compression ring. Do not over tighten. Where the sensors are used in conjunction with a pocket, either to allow easy withdrawal or as a protection against corrosion, the separate screwed nipple is dispensed with and the union nut and compression ring attached directly to the top of the pocket. Therefore insert the pocket in place of the screwed nipple.

When using a special long pocket with the SA122 or SA123 sensor, the screwed nipple, compression ring and nut are dispensed with and a rubber sealing bung provided, which is fitted over the capillary and slid into place to secure the sensor into the pocket. Screw the pocket into place, and then feed the sensor bulb to the bottom of the pocket, using the rubber bung to seal the top.

When using a pocket it is advisable to fill the gap between the pocket and the sensor with a heat conducting medium such as oil, but when using a special fang pocket in conjunction with the SA122 or SA123 sensors it should not be filled above the top of the sensor. The adjustment mechanism should not be subjected to an ambient temperature above 50°C (122°F). The capillary tube between the sensor and the valve must be run and supported in such a way that it wilt not become damaged. Avoid all sharp bends.

10.4.3 Display Adjustment

The adjustment head provided (Figure 1), enables the set temperature to be raisd or lowered, one the drive screw '**C**' has been engaged.

To make any adjustment the blue knob is turned clockwise to lower the temperature, and counterclockwise to increase it.

After setting, if desired, the drive screw can be disengaged by prying out the black plastic cap 'B' with a small flat-head screwdriver, via the slot provided, remove the 3 mm A/F allen headed drive screw 'C' and stow in the knob, then replace the black cap.

The adjustment knob will now spin freely without changing the temperature setting.

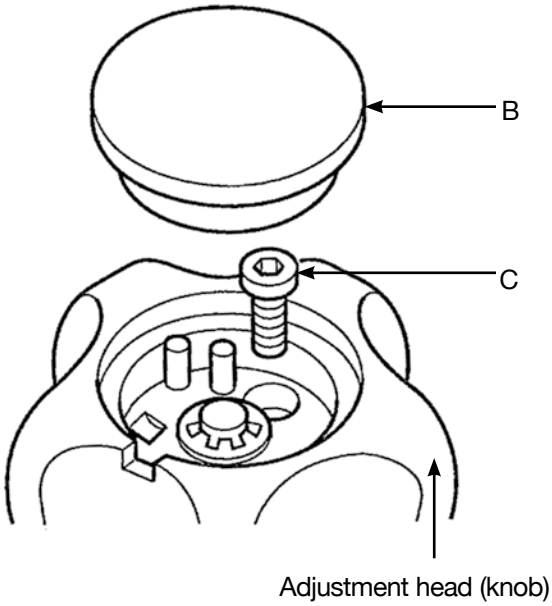

Fig. 1

10.4.4 Commissioning

Reference Figure 2, opposite, for the following instructions:

Adjust to the desired setting by turning the knob clockwise to lower the temperaure and counterclockwise to increase it.

After setting the plant to work, compare the thermometer reading with the scale reading on the temperature control reading. This may be found to differ by a few degrees. If precise indication is require it can be adjusted by resetting the scale as follows.

1. Loosen the screw holding the sleeve scale in place and adjust the sleeeve by rotating it until the scale reading matches the actual temperature.
2. Tighten the screw until it holds the scale firmly in place without over tightening (it only needs a light touch as it is for location only).

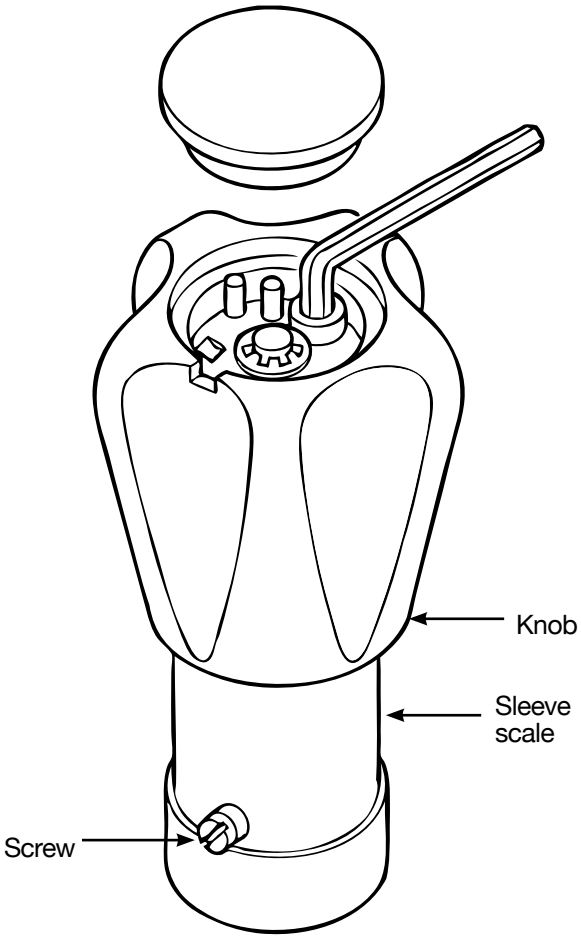

Fig. 2

10.5 Supplementary Safety Information, Installation and Maintenance Instructions for SA Temperature Control Systems:

Safe operation of these products can only be guaranteed if they are properly installed, commissioned, used and maintained by qualified personnel 10.6 in compliance with the operating Instructions. General installation and safety instructions for pipeline and plant construction, as well as the proper use of tools and safety equipment must also be complied with.

10.5.1 Intended Use

Referring to the Installation and Maintenance Instructions, name-plate and Technical Information Sheet, check that the product is suitable for the intended use/application. The products listed below comply with the requirements of the European Pressure Equipment Directive 97/23/EC and fall within category 'SEP'. It should be noted that products within this category are required by the directive now to carry the CE mark.

i) The products have been specifically designed for use on steam water and other non-hazardous fluids which are in Group 2 of the above mentioned Pressure Equipment Directive. The products' use on other fluids may be possible but, if this is contemplated, Yokogawa should be contacted to confirm the suitability of the product for the application being considered.

ii) Check material suitability, pressure and temperature and their maximum and minimum values. If the maximum operating limits of the product are lower than those of the system in which it is being fitted, or if malfunction of the product could result in a dangerous overpressure or over temperature occurrence, ensure a safety device is included in the system to prevent such over-limit situations.

iii) Determine the correct installation situation and direction of fluid flow.

iv) Yokogawa products are not intended to withstand external stresses that may be induced by any system to which they are fitted. It is the responsibility of the installer to consider these stresses and take adequate precautions to minimize them.

v) Remove protection covers from all connections before installation.

10.5.2 Access

Ensure safe access and if necessary a safe working platform (suitably guarded) before attempting to work on the product.. Arrange suitable lifting gear if required.

10.5.3 Lighting

Ensure adequate lighting, particularly where detailed or intricate work is required

10.5.4 Hazardous Liquids or Gases in the Pipeline

Consider what is in the pipeline or what may have been in the pipeline at some previous time. Consider: flammable materials, substances hazardous to health, extremes of temperature.

10.5.5 Hazardous Environment around the Product

Consider: explosion risk areas, lack of oxygen (e.g., tanks, pits), dangerous gases, extremes of temperature, hot surfaces, fire hazard (e.g. during welding), excessive noise, moving machinery.

10.5.6 The System

Consider the effect on the complete system of the work proposed. Will any proposed action (e.g. closing isolation valves, electrical isolation) put any other part of the system or any personnel at risk?

Dangers might include isolation of vents or protective devices or the rendering ineffective of controls or alarms. Ensure isolation valves are turned on and off in a gradual way to avoid system shocks.

10.5.7 Pressure Systems

Ensure that any pressure is isolated and safely vented to atmospheric pressure. Consider double isolation (double block and bleed) and the locking or labeling of closed valves. Do not assume that the system has depressurized even when the pressure gauge indicates zero.

10.5.8 Temperature

Allow time for temperature to normalize after isolation to avoid danger of burns.

10.5.9 Tools and Consumables

Before starting work ensure that you have suitable tools and/or consumables available. Use only genuine Yokogawa replacement parts.

10.5.10 Protective Clothing

Consider whether you and/or others in the Vicinity require any protective clothing to protect against the hazards of, for example, chemicals, high/low temperature, radiation, noise, falling objects, and dangers to eyes and face.

10.5.11 Permits to Work

All work must be carried out or be supervised by a suitably competent person. Installation and operating personnel should be trained in the correct use of the product according to the Installation and· Maintenance Instructions. Where a formal ‘permit to work’ system is in force it must be complied with. Where there is no such system, it is recommended that a responsible person should know what work is going on and, where necessary, arrange to have an assistant whose primary responsibility is safety.

Post ‘warning notices’ if necessary.

10.5.12 Handling

Manual handling of large and/or heavy products may present a risk of injury. Lifting, pushing, pulling, carrying or supporting a load by bodily force can cause injury particularly to the back. You are advised to assess the risks taking into account the task, the individual, the load and the working environment and use the appropriate handling method depending on the circumstances of the work being done,

10.5.13 Residual Hazards

In normal use the external surface of the product may be very hot. If used at the maximum permitted operating conditions the surface temperature of some products may reach temperatures of 350ºC.

Many products are not self-draining. Take due care when dismantling or removing the product from an installation (refer to ‘Maintenance instructions’).

10.5.14 Freezing

Provision must be made to protect products which are not self-draining against frost damage in environments where they may be exposed to temperatures below freezing point.

10.5.15 Disposal

Unless otherwise stated in the Installation and Maintenance Instructions, this product is recyclable and no ecological hazard is anticipated with its disposal providing due care is taken.

10.5.16 Returning Products

Customers and stockiest are reminded that under EC Health, Safety and Environment Law, when returning products to Yokogawa they must provide information on any hazards and the precautions to be taken due to contamination residues or mechanical damage which may present a health, safety or environmental risk. This information must be provided in

11 DIMENSION DRAWINGS

writing including Health and Safety data sheets relating to any substances identified as hazardous or potentially hazardous.

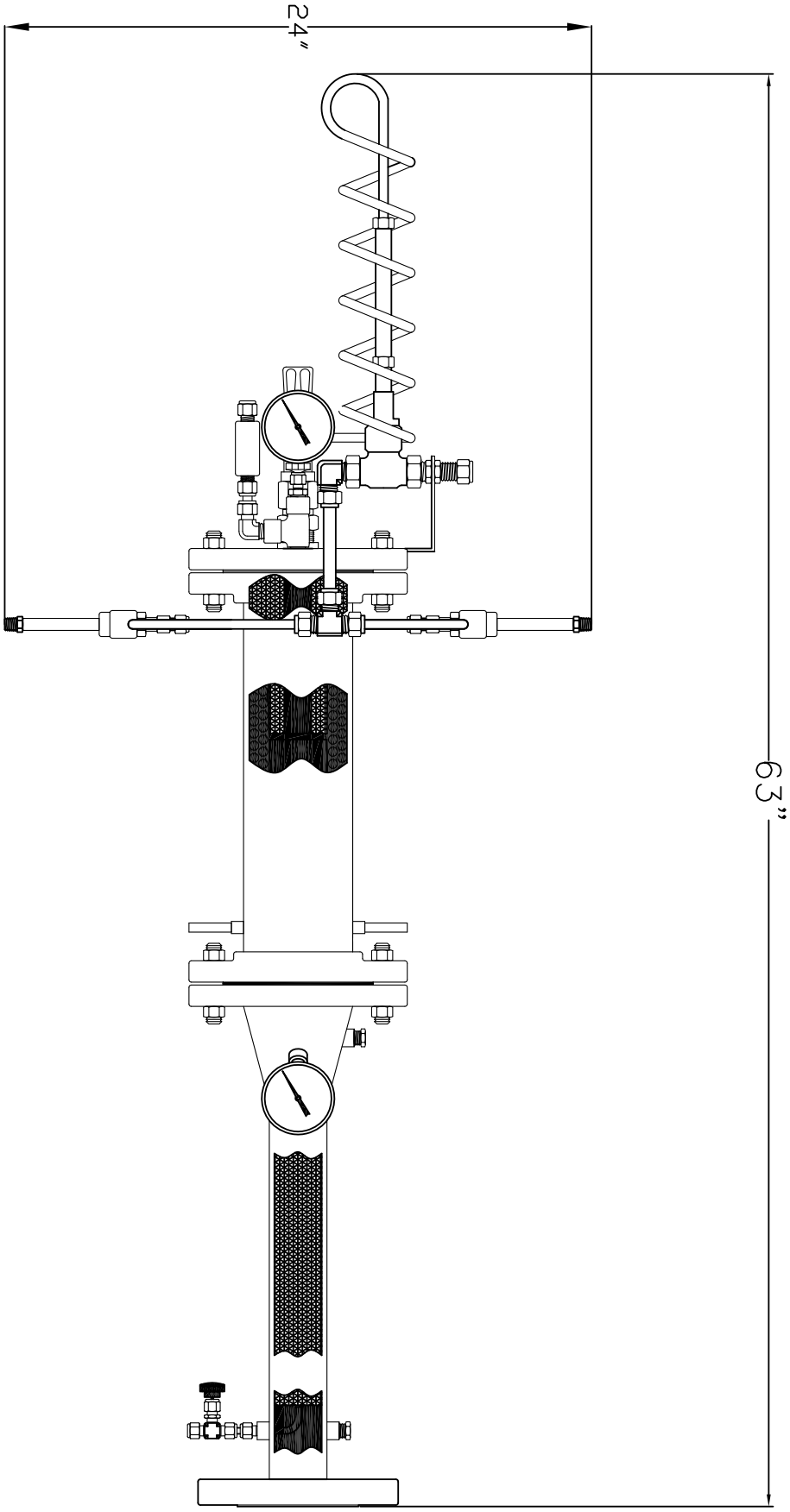

11 Dimension Drawings (continued)

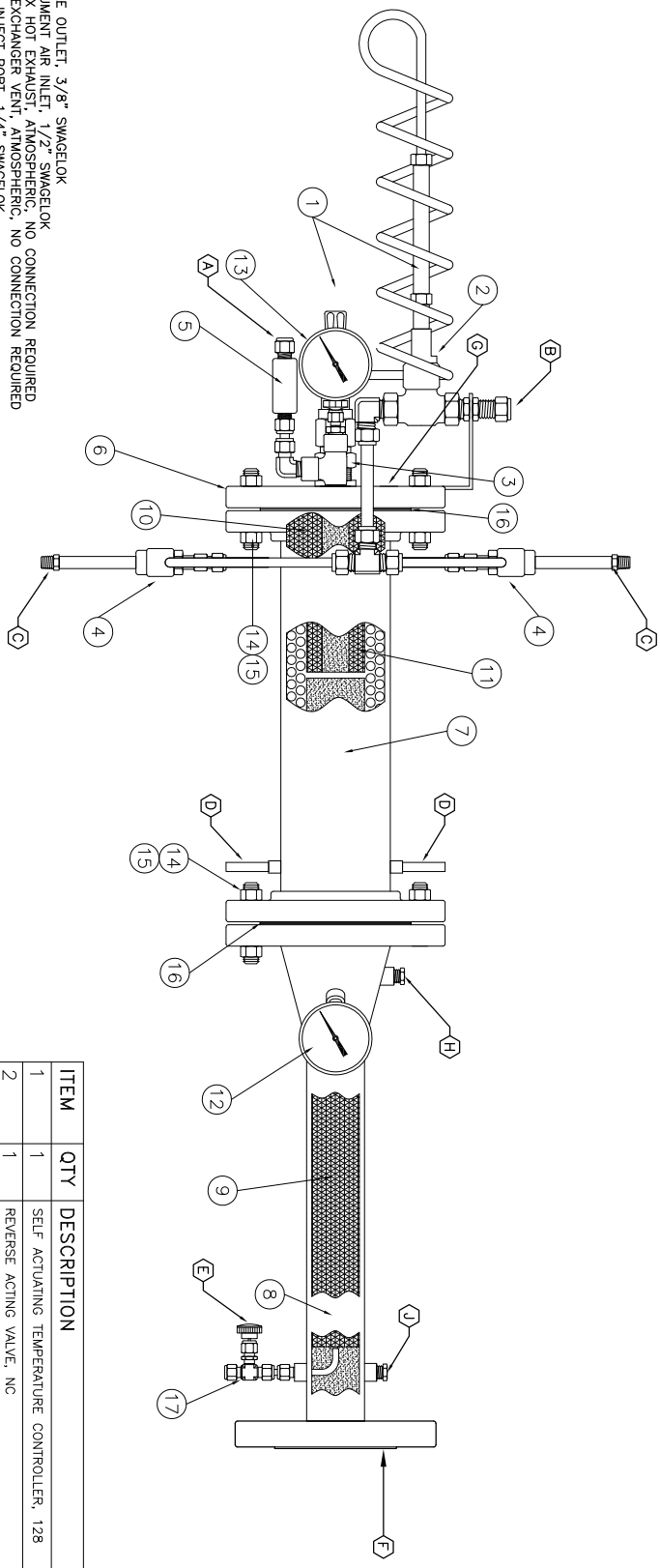

A – SAMPLE OUTLET, 3/8" SWAGELOK
B – INSTRUMENT AIR INLET, 1/2" SWAGELOK
C – VORTEX HOT EXHAUST, ATMOSPHERIC, NO CONNECTION REQUIRED
D – HEAT EXCHANGER VENT, ATMOSPHERIC, NO CONNECTION REQUIRED
E – STEAM INJECT PORT, 1/4" SWAGELOK
F – PROCESS INLET
G – 1/4" NPT CLEAN PORT (CAPPED)
H – 1/4" NPT STEAM CLEAN OUT (CAPPED)
J – 1/4" NPT FOR DRAIN (CAPPED)

ITEM	QTY	DESCRIPTION
1	1	SELF ACTUATING TEMPERATURE CONTROLLER, 128
2	1	REVERSE ACTING VALVE, NC
3	1	THERMOWELL FOR TEMPERATURE CONTROLLER
4	2	VORTEX AIR COOLER, 10 SCFM, 15 SCFM
5	1	OVER TEMPERATURE SHUT-OFF VALVE
6	1	HEAT EXCHANGER TOP FLANGE
7	1	HEAT EXCHANGER ASSEMBLY
8	1	FILTER REFLUX ASSEMBLY
9	1	FILTER SECTION MESH INSERT
10	1	DE-MISTING PAD
11	1	MESH "SOCK" FOR THERMOWELL
12	1	TEMP. INDICATOR, DUAL SCALE, FILTER SECTION
13	1	TEMP. INDICATOR, DUAL SCALE, TOP FLANGE
14	16	BOLTS
15	32	NUTS, HEX HEAVY
16	2	GASKETS (COMPRESSED GRAPHITE NITRILE BINDER)
17	1	VALVE, MANUAL STEAM INJECT REGULATING NEEDLE

11 Dimension Drawings (continued)

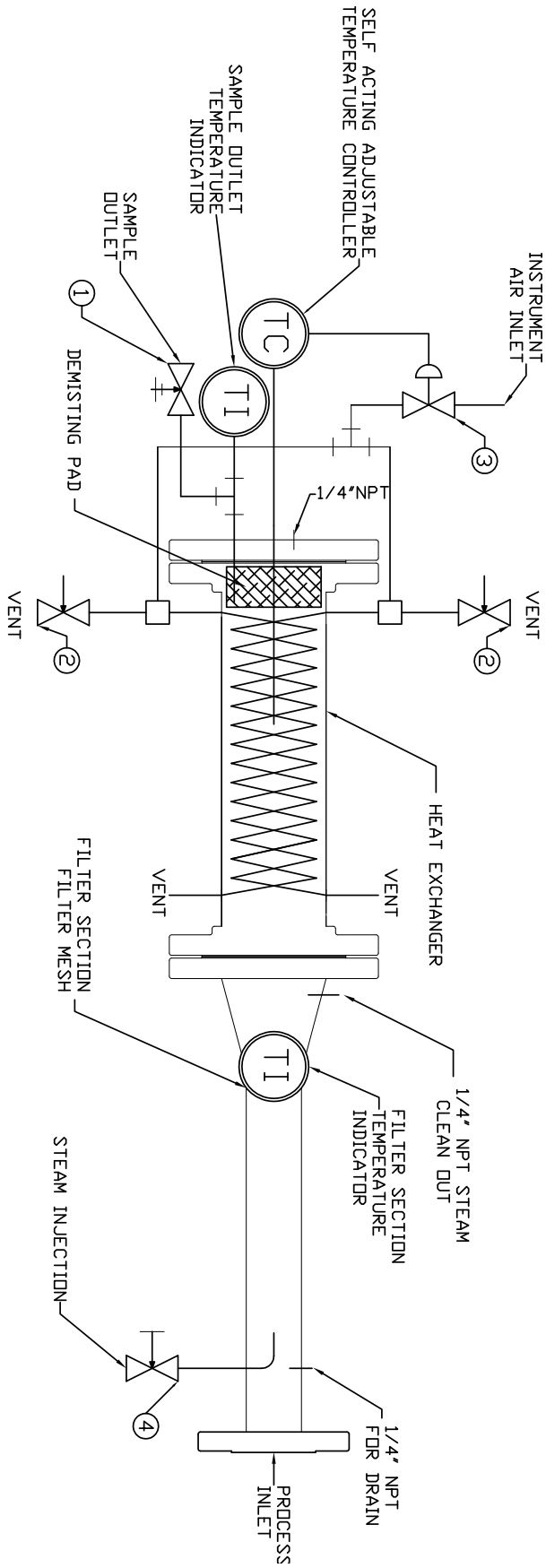

Notes

Notes

Notes

Notes

Yokogawa Corporation of America

North America
2 Dart Road, Newnan, GA 30265-1094, USA
Phone: 800-888-6400 Fax: 770-254-0928

12530 West Airport Blvd., Sugar Land, TX 77478
Phone: 281-340-3800 Fax: 281-340-3838

Mexico
Melchor Ocampo 193, Torre C, Oficina 3"B"
Veronica Anzures D.F., C.P. 11300
Phone: (55) 5260-0019, (55) 5260-0042

Yokogawa Canada, Inc.
Bay 4, 11133 40th Street SE, Calgary, AB Canada T2C2Z4
Phone: 403-258-2681 Fax: 403-258-0182

Yokogawa has an extensive sales and distribution network.
Please refer to the website (www.yokogawa.com/us) to contact your nearest representative.

YOKOGAWA ◆

GS 11A00V01-01-A
Subject to change without notice